May 2016

Air Quality Impact Analysis

Santolina Level B Master Plan

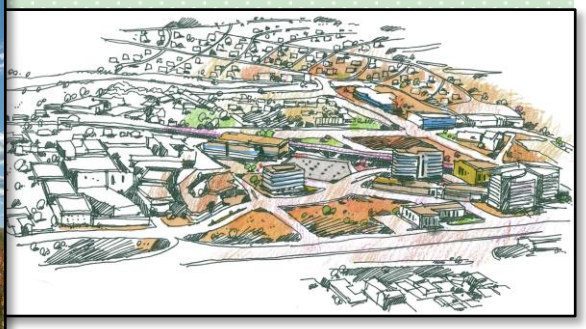

Prepared for:

Bohannan Huston Inc.
on behalf of
Bernalillo County Public Works Division

Prepared by:

Ecosphere Environmental Services, Inc.
1660 Old Pecos Trail
Santa Fe, NM 87505
(505) 954-1570

Ecosphere
Environmental Services

Durango, CO
Cortez, CO
Pagosa Springs, CO
Santa Fe, NM
Farmington, NM

This page intentionally left blank.

Table of Contents

1. Introduction **1**
2. Transportation Related Air Quality Regulations **4**
3. Inventory of Changes in Total Regional CO Emissions **5**
4. Microscale CO Hot Spot Air quality analysis **7**
5. Other Pollutants **12**
6. Conclusions **14**
7. References **15**
Appendix A – Regional Daily Roadway Performance Summary Statistics and CO Emission Rates by Roadway Functional Class **A-1**
Appendix B – CAL3QHC Input and Output Data **B-1**
Appendix C – Project Parameters and Acceptable Ranges for CO Categorical Hot Spot Finding **C-1**

List of Tables

Table 1. 2040 Total regional PM peak hour roadway performance summary statistics and CO emission rates 5
Table 2. 2040 total regional daily roadway performance summary statistics and CO emission rates 6
Table 3. Coors-Dennis Chavez/Rio Bravo CO Levels* 8
Table 4. Broadway/Rio Bravo Carbon Monoxide Levels* 9
Table 5. Atrisco Vista/I-40 Frontage Road/Central CO levels* 10
Table 6. Loop Road – Dennis Chavez CO levels* 11

List of Figures

Figure 1. Santolina Master Plan: Vicinity and Site Map 2
Figure 2. Santolina Master Plan: Level B Project Area 3
Figure 3. Ozone Trends in the Albuquerque and Bernalillo County Area 12

Abbreviations and Acronyms

%	percent
AQIA	Air Quality Impact Analysis
CAAA	Clean Air Act of 1970 and subsequent amendments
City	City of Albuquerque
CO	carbon monoxide
County	Bernalillo County
EHD	Environmental Health Department
EPA	U.S. Environmental Protection Agency
FHWA	Federal Highway Administration
I-40	Interstate 40
LMP	Albuquerque/Bernalillo County Limited Maintenance Plan for Carbon Monoxide
Master Plan	Santolina Level B Master Plan
MOVES	Motor Vehicles Emission Simulator
MRMPO	Mid-Region Metropolitan Planning Organization
MSAT	mobile source air toxics
MTP	Metropolitan Transportation Plan
NAAQS	National Ambient Air Quality Standards
NO_2	nitrogen dioxide
O_3	ozone
PCC	Planned Communities Criteria
PM_{10}	particulate matter equal to and less than 10 microns in diameter
$PM_{2.5}$	particulate matter equal to and less than 2.5 microns in diameter
ppm	parts per million
SIP	State Implementation Plans
VHD	vehicle hours of delay
VHT	vehicle hours of travel
VMT	vehicle miles of travel
VOC	volatile organic compounds

1. Introduction

The following Air Quality Impact Analysis (AQIA) was prepared to evaluate potential traffic-related air quality effects of the Santolina Level B Master Plan (Master Plan) (Western Albuquerque Land Holdings, LLC 2016) in Bernalillo County (County), New Mexico. The purpose of the AQIA is to assess whether the Master Plan would create transportation-related air quality impacts or deterioration of air quality, in accordance with the County's Planned Communities Criteria (PCC) (Albuquerque/Bernalillo County Planning Department 1991) and the Mid-Region Metropolitan Planning Organization's (MRMPO's) Futures 2040 Metropolitan Transportation Plan (MTP) (MRMPO 2015).

The Master Plan is a planned community proposed on the west mesa of Albuquerque in Bernalillo County, New Mexico (see Figure 1). The property is generally bound by Interstate 40 (I-40) on the north, 118th Street to the east, the Pajarito Mesa grant boundary to the south, and the Rio Puerco Valley to the west. The overall Santolina property encompasses 13,851 acres and is planned for development as a mixed used community with residential, commercial, industrial, institutional, parks, and open space use, in conformance with the PCC. A Level A Master Plan and Zone Map Amendment to the Planned Communities Zone was approved by the Bernalillo County Board of Commissioners on June 16, 2015 and the associated Santolina Level A Development Agreement was approved on June 24, 2015.

The Level B Plan is the initial phase of the overall Santolina plan and encompasses 4,243 acres (see Figure 2). It is a phased development approach that defines boundaries, land uses, transportation systems, and a vision for the first phase of development. As a requirement of Level B Master Plan review, a specific Transportation Master Plan (Bohannan Huston, Inc. 2016) was prepared addressing years 2025 and 2040 traffic patterns and potential impacts. The data from the Level B Transportation Master Plan provides the basis for the AQIA.

The AQIA evaluates changes in total regional transportation-related air pollutant emissions (primarily carbon monoxide [CO]) from implementation of the Level B Master Plan compared to those associated with the transportation system and land use assumptions in the adopted MTP. It also analyzes localized CO levels or "CO hot-spots" at urban intersections that experience the highest traffic increases and potential congestion as a result of implementing the Master Plan. In addition, the AQIA discusses other criteria pollutants regulated under the Clean Air Act as Amended (CAAA), including ozone (O_3), which is undergoing a change in the standards that may affect the region's attainment status under the CAAA.

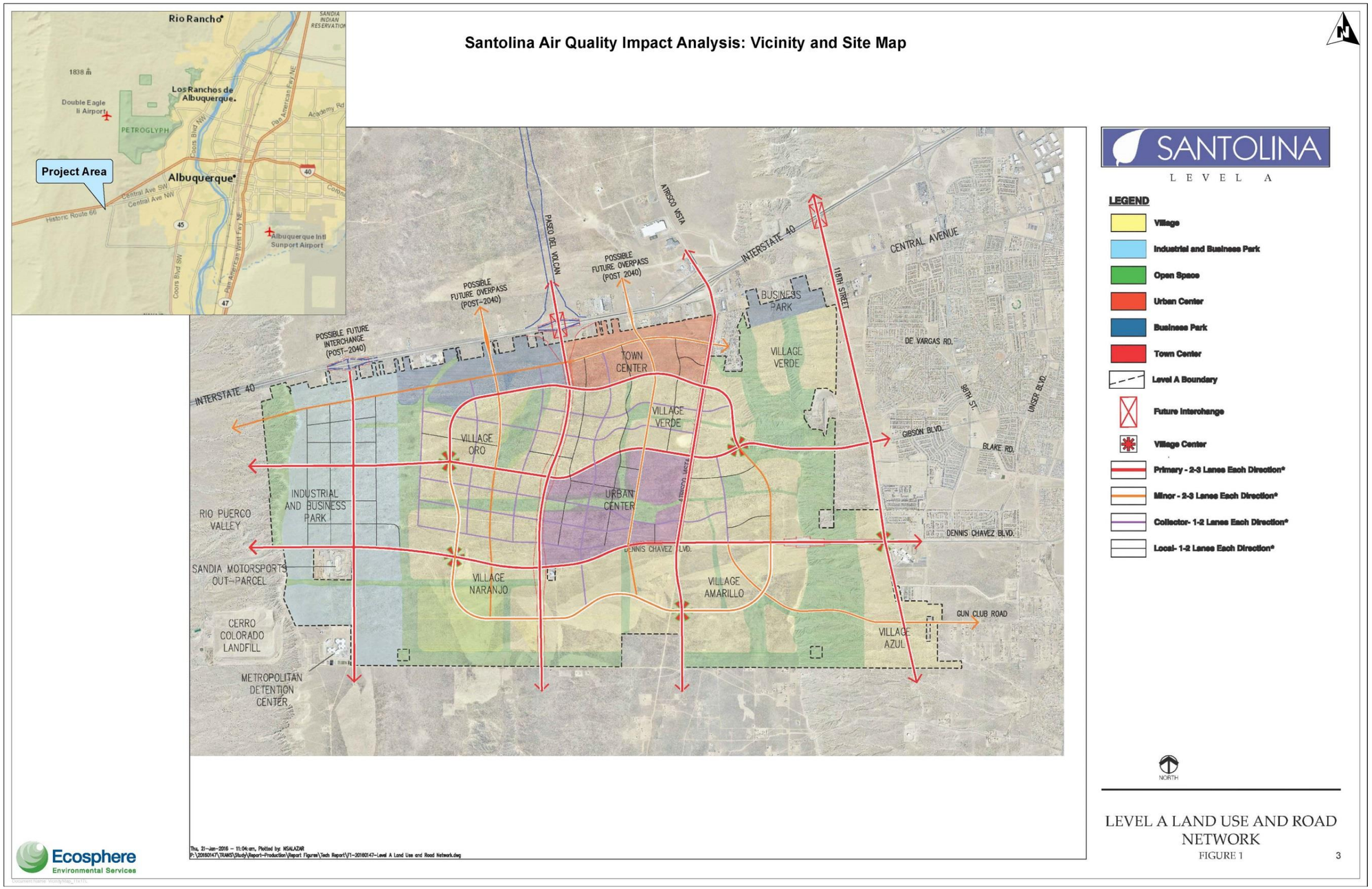

Figure 1. Santolina Master Plan: Vicinity and Site Map

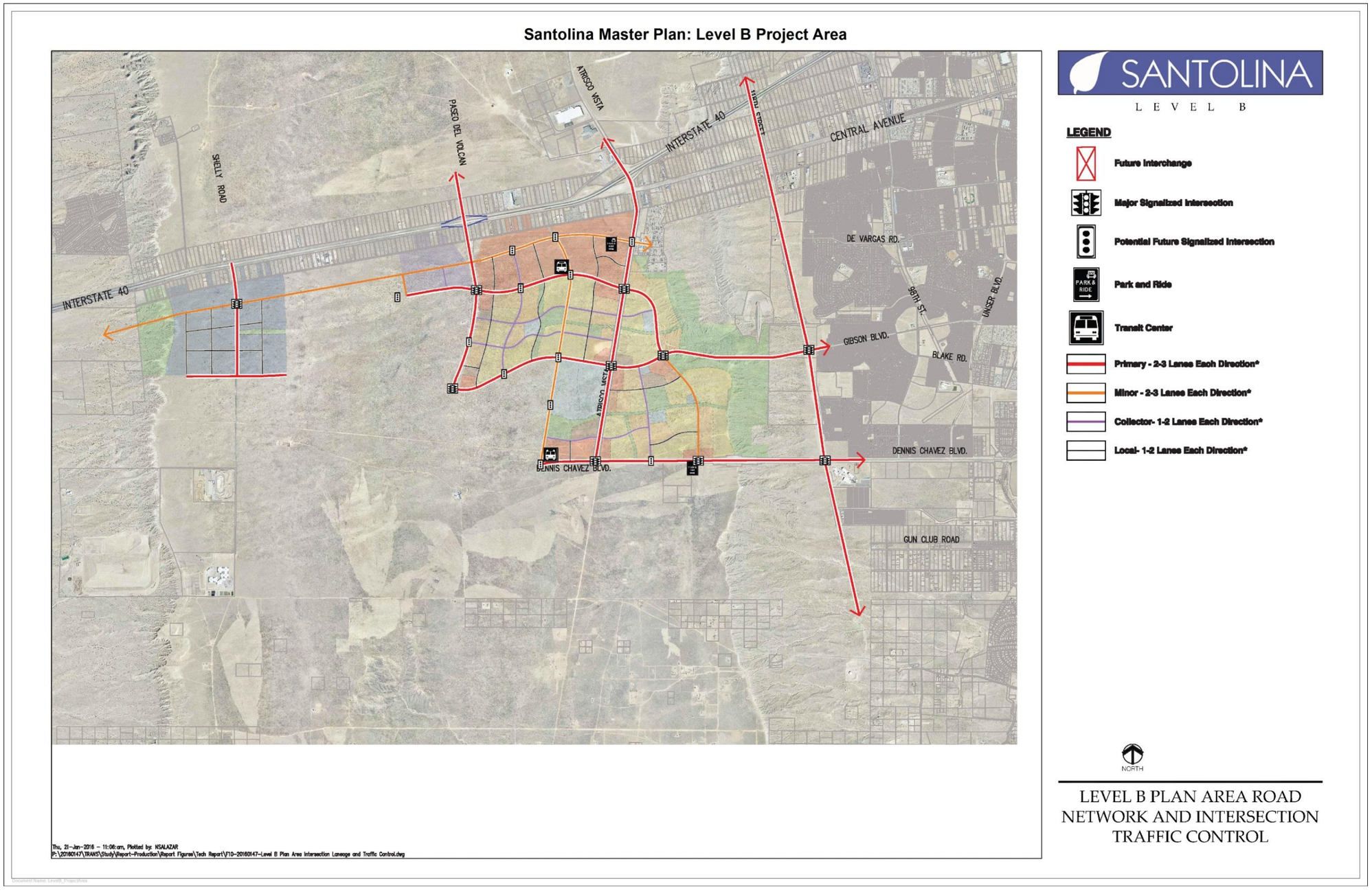

Figure 2. Santolina Master Plan: Level B Project Area

2. Transportation Related Air Quality Regulations

Air quality is regulated under the CAAA for federal actions and activities receiving federal funds or permit authorizations. The CAAA establishes the framework for nationwide air quality standards for pollutants. Under the CAAA, the U.S. Environmental Protection Agency (EPA) initially developed the National Ambient Air Quality Standards (NAAQS) for six "criteria" pollutants: sulfur dioxide, particulate matter equal to and less than 10 microns in diameter (PM_{10}), nitrogen dioxide (NO_2), CO, O_3, and Lead, and subsequently developed a NAAQS for particulate matter equal to or less than 2.5 microns in diameter ($PM_{2.5}$).

The Albuquerque Metropolitan Area is the only region in New Mexico where CO standards were exceeded in the 1980s and early 1990s, and that was subject to transportation-related air quality nonattainment status. Throughout recent decades, the MRMPO and the City of Albuquerque (City) Environmental Health Department (EHD) have developed and implemented regional transportation conformity plans with measures to control and reduce CO and other emissions. In the past, these measures included a quantitative emissions analysis of the regional transportation plan (MTP), including future projects, to ensure that total emissions remained below establish thresholds or emissions budgets. Project-specific modeling studies or CO hot-spot analyses were also required in some cases to determine if proposed federally funded transportation improvements or private development projects would result in localized exceedances of the NAAQS, usually at high volume, congested intersections.

Since the last violation of the Federal 8-hour CO standard in 1991, area CO levels have been steadily in decline. The current levels measure less than 30 percent (%) of the NAAQS. Bernalillo County is now designated as "limited maintenance" because it has been in attainment for more than 10 years. The region is currently subject to a federally approved Limited Maintenance Plan for CO (LMP) (Albuquerque Environmental Health Department 2004), which meets EPA's criteria and achieves pollutant levels that are significantly below the NAAQS. Because conditions have improved, quantitative CO emissions budgets and hot-spot modeling are typically no longer required as part of project planning and development and all indications are that the region will not exceed the CO thresholds in the future.

Although CO conditions have improved significantly, the MRMPO and its member agencies continue to implement policies that are intended to maintain air quality. The policy directives in the MTP and other planning documents encourage changes in travel behavior that reduce vehicle miles traveled (VMT), such as shifts to ridesharing, transit, bicycling, or walking, and include strategies that improve traffic flow to reduce vehicle idling and stop-and-start driving conditions that are associated with higher levels of emissions. The County's PCC requires that proposed projects conduct a transportation system analysis showing air quality impacts and include strategies to prevent deterioration of air quality and maintain community air quality objectives and standards.

The following AQIA was prepared to implement these plans and policies. It utilizes the Level B Transportation Master Plan data to evaluate regional and localized CO emissions in conformances with analysis methods that have been established in the region. Although O_3 is expected to be an upcoming air quality concern due to changing regulations (see Section 5), it was not analyzed quantitatively. The City EHD is initiating an emissions inventory and comprehensive study of O_3; however, until the analysis framework and methodology of this study is in place, prediction of O_3 precursors at the project level would have little meaning in the regional context.

3. Inventory of Changes in Total Regional CO Emissions

The Santolina Master Plan was developed with multi modal facilities and concepts to encourage non-motorized vehicular travel and transit use. It includes a mix of land uses intended to integrate jobs, retail services, and residential land uses within the plan area, and thus reduce the need for long distance trips. Implementation of the Master Plan would result in a shift in housing, employment, and commercial development to the Santolina area from other parts of the Albuquerque urban area, as currently predicted in the MTP. However, no overall difference in the total MTP planning area values are predicted for these land use categories.

In order to evaluate the effects of these changes in the locations of land uses, the Level B Transportation Master Plan provided roadway network performance statistics comparing the MTP and Santolina land use scenarios, including 2040 peak hour VMT, vehicle hours of travel (VHT), vehicle hours of delay (VHD), and average speed across the network. This analysis was based on the Master Plan's Travel Demand Forecasting Socioeconomic Data and Traffic Model Results (Planning Technologies, LLC 2016). Table 1 shows data developed by Planning Technologies, LLC comparing 2040 PM peak hour VMT, VHT, VHD, and average speed for the MTP and Master Plan land use scenarios. The data show that while VMT increases slightly with the Santolina Master Plan scenario compared to the MTP scenario, VHT and VHD decrease and average speed increases. This indicates that the transportation network is operating more efficiently during the PM peak hour with less delay and travel time, and slightly faster speeds.

Table 1. 2040 Total regional PM peak hour roadway performance summary statistics and CO emission rates

Parameter	MTP Scenario	Santolina Scenario	Difference	
			Absolute	Percent
VMT	2,894,913	2,978,559	+75,646	+2.6
VHT	132,932	129,354	-3,578	-2.7
VHD*	71,293	68,588	-2,705	-3.8
Average Speed	21.8	23.0	+1.2	+5.5
CO Emission Rate (grams/VMT)	1.08397	1.04799	0.03598	-3.3
Total CO Emissions (grams/pm peak hour)	3,137,999	3,121,500	-16,498	-0.5

The data for VMT and speeds in Table 1 were used to evaluate regional CO emissions for the MTP versus Master Plan scenarios. Carbon monoxide emissions generally decline as speeds increase up to about 45 miles per hour. The effects on CO emissions associated with changes in average speed were calculated in Table 1 with the EPA's current Motor Vehicles Emission Simulator model (MOVES 2014) (EPA 2014), which provides CO emission rates in grams per VMT at different speeds. The inputs to the MOVES 2014 model were developed for Bernalillo County in conjunction with the EHD staff (see Section 4 for more detail). Table 1 shows emission rates for each average speed, generated with the MOVES 2014 model, and calculates total emissions for the MTP and Santolina scenarios based on the associated VMT. As shown, PM peak hour emissions decrease very slightly with the Santolina scenario due to the increased speed, even though VMT increases.

A more detailed analysis of 2040 daily regional travel-related emissions was made with data for each roadway functional classification and the associated speeds and volumes. Table 2 shows a summary of the results and Appendix A contains the full analysis. As shown, although VHT declines (-1%) and average speed increases (+5.4%) with the Santolina scenario, VMT increases (+4.4%) enough to cause total daily emissions to increase slightly (3.0%).

Table 2. 2040 total regional daily roadway performance summary statistics and CO emission rates

Parameter	MTP Scenario	Santolina Scenario	Difference	
			Absolute	Percent
VMT	**29,587,699**	**30,902,177**	+1,314,478	+4.4
VHT	**990,609**	**980,732**	-9,877	-1.0
Average Speed	**29.9**	31.5	+1.6	+5.4
Total CO Emissions (grams/day)	**29,863,512**	**30,749,687**	+886,175	+3.0
Total CO Emissions (tons/day)	**32.919**	**33.896**	+0.977	+3.0

While there are no specific thresholds or CO emission budgets for a development project such as the Santolina Master Plan, the indicated increase of about 3% is not anticipated to result in regional deterioration of air quality given current ambient CO levels, which are less than 30 % of the NAAQS.

4. Microscale CO Hot Spot Air quality analysis

To evaluate localized, worst case CO levels associated with the Master Plan, a quantitative CO hot-spot analysis was prepared for those intersections with the highest traffic levels and potential congestion, both within the Santolina area and off-site at intersections affected by Master Plan traffic. A CO hot-spot analysis has been required as part of project-level conformity determinations in CO nonattainment and maintenance areas since the initial conformity rule in 1993 and was required through the City's zoning ordinance (Section 4-16-3-14) from 1990 to 2010 for development projects that exceeded designated trip generation thresholds. A hot-spot analysis is an estimation of likely future localized CO concentrations and a comparison of those concentrations to the NAAQS. Hot-spot analyses assess impacts on a scale smaller than the entire nonattainment or maintenance area, including, for example, congested roadway intersections. A hot-spot analysis must show that non-exempt federal projects do not cause any new violations of the CO NAAQS, increase the frequency or severity of existing violations, or delay timely attainment of any NAAQS or any interim milestones. Under the City's zoning ordinance, the hot-spot analysis was used to help develop mitigation measures, for example, intersection improvements or multi-modal features like bicycle lockers.

For the Santolina project, the off-site intersections that were analyzed include the Coors/Dennis Chavez/Rio Bravo and Broadway/Rio Bravo intersections, which are outside the Master Plan area. These intersections have the highest projected traffic volumes and operated at level of service D, which is considered the lower limit of acceptable congestion. They were evaluated under the 2040 MTP and Santolina Master Plan traffic forecast scenarios. Within the Master Plan area, the Atrisco/I-40 Frontage Road/Central and Santolina Loop/Dennis Chavez intersections were evaluated under the Master Plan scenario only. These intersections have the highest traffic volumes within the Master Plan area, but have minimal traffic or do not exist under the MTP scenario.

The CO hot-spot analysis includes predictions of CO emission rates for the mix of vehicles at given speeds during the 2040 study year using the EPA's MOVES 2014 model and analysis of CO dispersion from the street network with the EPA-approved CAL3QHC model. The modeling process produces hourly CO concentrations at specific receptors, which included 20 locations around each of the signalized intersections for the Santolina project.

Emission rates were developed from MOVES 2014 free flow and idle conditions on roadway links for each intersection analyzed. The inputs to the MOVES 2014 model were based on EPA default model data and local air quality information developed in conjunction with the EHD staff. Local data included meteorological conditions (average temperature and humidity in January), the age distribution and composition of the vehicle fleet, and information on EHD's vehicle inspection and maintenance program. As recommended in EPA guidance material (EPA 2015), the default MOVES 2014 fuel information was used for the analysis.

To model CO dispersion, the EPA-approved CAL3QHC model was used. This model relies on assumptions about worst-case meteorological, site, and traffic conditions. It produces hourly CO concentrations at specific receptor locations. For this project, 20 receptors were located at each signalized intersection according to the criteria in the *Guidelines for Modeling Carbon Monoxide from Roadway Intersections* (EPA, 1992). Traffic data from the Level B Transportation Master Plan were used to provide information on volumes and operational characteristics for the affected intersections. Intersection information and the input and output data from CAL3QHC are included in Appendix B.

The results from the CAL3QHC modeling are summarized in Tables 3 through 6 for the four intersections. The modeled results are evaluated in relation to the NAAQS (9.0 ppm over 8-hours and 35.0 ppm during the worst 1-hour period) and the LMP standards (7.7 ppm for the 8-hour period and 29.8 ppm for the 1-hour period). All of the modeled results are well below the NAAQS and change very little as a result of the proposed Master Plan.

Table 3. Coors-Dennis Chavez/Rio Bravo CO Levels*

Receptor #	2040 P.M.					
	MTP Scenario		Santolina Scenario		Change	
	1-Hr	8-Hr	1-Hr	8-Hr	1-Hr	8-Hr
1	3.1	2.3	3.2	2.4	0.1	0.1
2	3.2	2.4	3.2	2.4	0.0	0.0
3	3.1	2.3	3.1	2.3	0.0	0.0
4	3.1	2.3	3.2	2.4	0.1	0.1
5	3.1	2.3	3.1	2.3	0.0	0.0
6	3.1	2.3	3.2	2.4	0.1	0.1
7	3.1	2.3	3.1	2.3	0.0	0.0
8	3.0	2.3	3.0	2.3	0.0	0.0
9	3.1	2.3	3.1	2.3	0.0	0.0
10	3.1	2.3	3.1	2.3	0.0	0.0
11	3.1	2.3	3.1	2.3	0.0	0.0
12	3.0	2.3	3.1	2.3	0.1	0.0
13	3.1	2.3	3.1	2.3	0.0	0.0
14	3.1	2.3	3.1	2.3	0.0	0.0
15	3.1	2.3	3.1	2.3	0.0	0.0
16	3.0	2.3	3.0	2.3	0.0	0.0
17	3.1	2.3	3.1	2.3	0.0	0.0
18	3.1	2.3	3.2	2.4	0.1	0.1
19	3.0	2.3	3.1	2.3	0.1	0.0
20	3.0	2.3	3.1	2.3	0.1	0.0
Average	**3.1**	**2.3**	**3.1**	**2.3**	**0.0**	**0.0**

* All concentrations are in parts per million (ppm).

** 1-hour background level is 3.00 ppm.

*** 8-hour values are calculated by multiplying 1-hour values by a persistence factor of 0.75.

Table 4. Broadway/Rio Bravo Carbon Monoxide Levels*

Receptor #	2040 P.M.					
	MTP Scenario		Santolina Scenario		Change	
	1-Hr	8-Hr	1-Hr	8-Hr	1-Hr	8-Hr
1	3.3	2.5	3.2	2.4	-0.1	-0.1
2	3.2	2.4	3.1	2.3	-0.1	-0.1
3	3.2	2.4	3.2	2.4	0.0	0.0
4	3.2	2.4	3.2	2.4	0.0	0.0
5	3.1	2.3	3.1	2.3	0.0	0.0
6	3.2	2.4	3.1	2.3	-0.1	-0.1
7	3.1	2.3	3.1	2.3	0.0	0.0
8	3.0	2.3	3.0	2.3	0.0	0.0
9	3.1	2.3	3.1	2.3	0.0	0.0
10	3.2	2.4	3.1	2.3	-0.1	-0.1
11	3.1	2.3	3.1	2.3	0.0	0.0
12	3.1	2.3	3.1	2.3	0.0	0.0
13	3.1	2.3	3.1	2.3	0.0	0.0
14	3.2	2.4	3.1	2.3	-0.1	-0.1
15	3.1	2.3	3.1	2.3	0.0	0.0
16	3.0	2.3	3.0	2.3	0.0	0.0
17	3.1	2.3	3.1	2.3	0.0	0.0
18	3.2	2.4	3.1	2.3	-0.1	-0.1
19	3.1	2.3	3.1	2.3	0.0	0.0
20	3.1	2.3	3.1	2.3	0.0	0.0
Average	**3.1**	**2.3**	**3.1**	**2.3**	**0.0**	**0.0**

* All concentrations are in parts per million (ppm).

** 1-hour background level is 3.00 ppm.

*** 8-hour values are calculated by multiplying 1-hour values by a persistence factor of 0.75.

Table 5. Atrisco Vista/I-40 Frontage Road/Central CO levels*

Receptor #	2040 P.M. Santolina Scenario	
	1-Hr	8-Hr
1	3.3	2.5
2	3.2	2.4
3	3.2	2.4
4	3.2	2.4
5	3.2	2.4
6	3.2	2.4
7	3.2	2.4
8	3.1	2.3
9	3.2	2.4
10	3.1	2.3
11	3.0	2.3
12	3.0	2.3
13	3.1	2.3
14	3.2	2.4
15	3.2	2.4
16	3.1	2.3
17	3.1	2.3
18	3.1	2.3
19	3.0	2.3
20	3.0	2.3
Average	**3.1**	**2.4**

* All concentrations are in parts per million (ppm).

** 1-hour background level is 3.00 ppm.

*** 8-hour values are calculated by multiplying 1-hour values by a persistence factor of 0.75.

Table 6. Loop Road – Dennis Chavez CO levels*

Receptor #	2040 P.M. Santolina Scenario	
	1-Hr	**8-Hr**
1	3.2	2.4
2	3.1	2.3
3	3.1	2.3
4	3.2	2.4
5	3.0	2.3
6	3.0	2.3
7	3.1	2.3
8	3.1	2.3
9	3.1	2.3
10	3.1	2.3
11	3.0	2.3
12	3.2	2.4
13	3.0	2.3
14	3.0	2.3
15	3.1	2.3
16	3.1	2.3
17	3.1	2.3
18	3.0	2.3
19	3.0	2.3
20	3.1	2.3
Average	**3.1**	**2.3**

* All concentrations are in parts per million (ppm).

** 1-hour background level is 3.00 ppm.

*** 8-hour values are calculated by multiplying 1-hour values by a persistence factor of 0.75.

The very low CO levels shown in Tables 3 through 6 are typical of recent results from other intersection CO hot-spot analyses in Bernalillo County. These results reflect the declining emission factors from the MOVES 2014 model, which are based on anticipated improvements in vehicle emissions technology, especially when projected to the year 2040. Because of this trend, the Federal Highway Administration (FHWA) (FHWA 2014) recently developed a CO Categorical Hot Spot Finding that allows a project sponsor to be exempt from quantitative CO hot-spot analysis providing that the project's parameters fall within acceptable ranges, such as volumes and number of lanes (see Appendix C). Most of the intersections analyzed in the Level B Transportation Master Plan fall under these parameters. Those intersections that were evaluated include triple left-turn lanes and in some cases approach volumes that slightly exceed the peak hour threshold.

5. Other Pollutants

5.1 Ozone

In the past, CO was considered the primary transportation related pollutant in the Albuquerque area due to the region's historic non-attainment status; however, NO_2 and volatile organic compounds (VOCs) (both O_3 precursors), particulates (PM_{10} and $PM_{2.5}$), and certain air toxics are also emitted by motor vehicles. The region has historically been in attainment for these pollutants and project-specific transportation control measures have not been established. However, ground level O_3 is a future concern that will likely require greater analysis in the urban area.

For more than a decade, the metropolitan area has experienced relatively high O_3 concentrations; although the levels have been trending downward during the past 5 years (see Figure 3). The EPA has recently proposed that the O_3 standard be lowered to a level that is more protective of public health. The current EPA O_3 standard is .075 ppm. On November 25, 2014, the EPA proposed to lower the standard to the range of .065 to .070 ppm, which may place the area in nonattainment status. Following the establishment of a new standard, data will be collected and verified in order for the EPA to determine whether the region will be designated as attainment or nonattainment. An initial State Implementation Plan (SIP) would then be due to EPA by October 1, 2018, with additional elements to the plan due by October of 2020 or 2021.

Figure 3. Ozone Trends in the Albuquerque and Bernalillo County Area

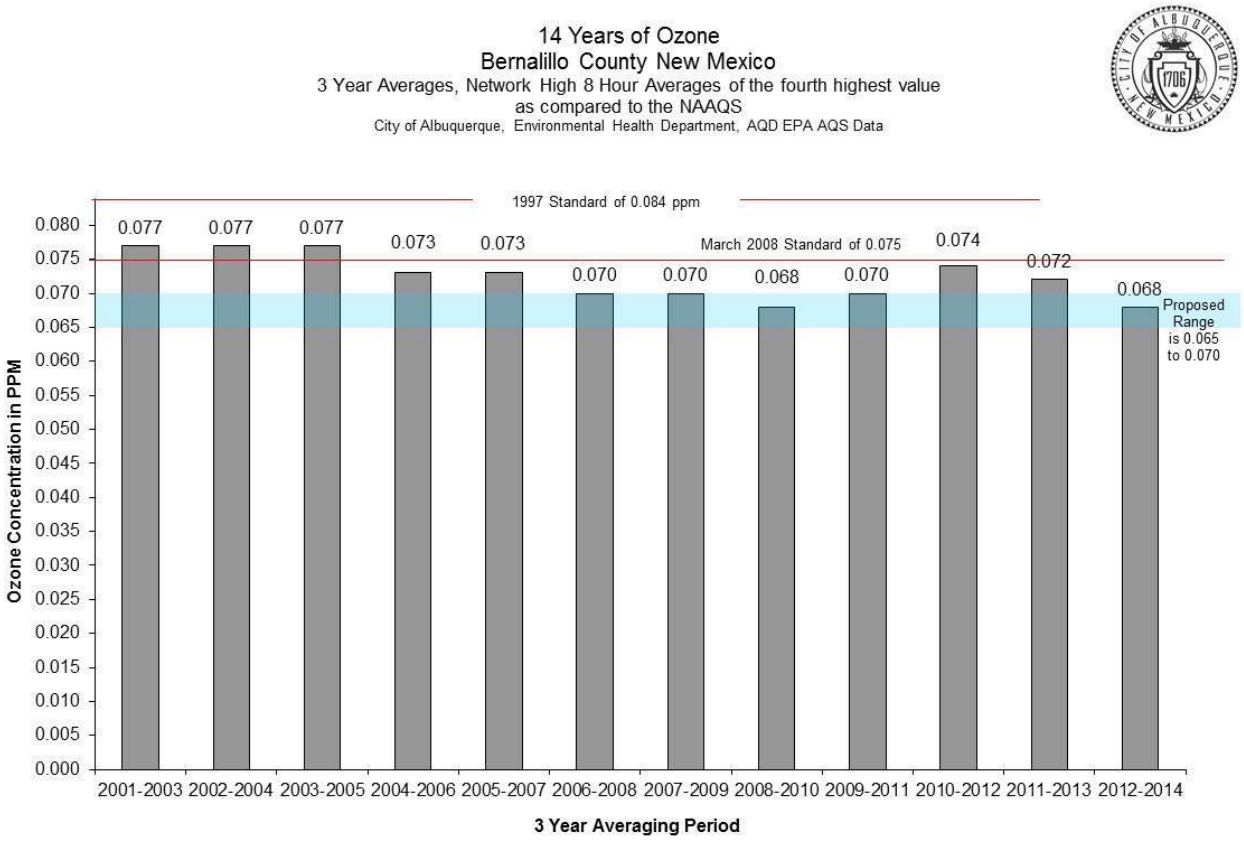

Source: City of Albuquerque, Environmental Health Department, Air Quality Program

Ozone is a pollutant that is not directly emitted, but instead is produced by reactions between precursor chemicals in the presence of sunlight and heat. Since O_3 does not form immediately, and because heat and sunlight are involved in its creation, it can form miles away from the original source of its precursors. Principal among the O_3 precursors are VOCs such as raw fuel vapors and NO_2 formed primarily during the combustion of fossil fuels. The control of O_3 is based on regulating emissions of VOCs and NO_2, and vehicle emissions are sources of both precursors. The local SIP (Albuquerque-Bernalillo County Air Quality Control Board 2010) contains elements that address O_3, VOCs, and NO_2, including measures such as enforceable limitations on vehicle emissions through the inspection and maintenance program, air quality monitoring and data analysis, and stationary source permitting.

The City EHD is currently preparing to undertake a comprehensive study relating to O_3 levels and formation, in anticipation of the changing standards. This analysis will consist of inventories of on-road vehicle emissions as well as industrial and other sources, and will include regional modeling. Because this study process is not fully underway and modeling and analysis protocols have not been established, the AQIA does not include a quantitative O_3 evaluation for the Santolina Master Plan. It is likely that future phases of the Master Plan will be required to evaluate O_3 in more detail.

5.2 Mobile Source Air Toxics

Mobile Source Air Toxics (MSATs) are compounds emitted from highway vehicles and non-road equipment that are known or suspected to cause cancer and irritation to the respiratory tract, including the exacerbation of asthma. Controlling air toxic emissions became a national priority with the passage of the CAAA, whereby Congress mandated that the EPA regulate 188 air toxics. The EPA has identified seven compounds with significant contributions from mobile sources. These are acrolein, benzene, 1,3-butadiene, diesel particulate matter plus diesel exhaust organic gases (diesel PM), formaldehyde, naphthalene, and polycyclic organic matter.

The amount of MSATs emitted is proportional to VMT assuming that other variables such as fleet mix are the same for each alternative. According to a recent FHWA study, MSAT emissions will likely be lower than present levels in future years as a result of EPA's national control programs that are projected to reduce annual MSAT emissions by over 80% from 2010 to 2050 (FHWA 2012). Local conditions may differ from these national projections in terms of fleet mix and turnover, VMT growth rates, and local control measures. However, the magnitude of the EPA-projected reductions is so great (even after accounting for VMT growth) that MSAT emissions are likely to be lower in the future in virtually all locations.

In compliance with the Council on Environmental Quality regulations (40 CFR 1502.22[b]), it must be disclosed that air toxics analysis is a continuing area of research. While much work has been done to assess the overall health risk of air toxics, many questions remain unanswered. In particular, the tools and techniques for assessing project-specific health outcomes as a result of lifetime MSAT exposure remain limited.

6. Conclusions

The preceding analysis supports the conclusion that transportation related emissions from the proposed Santolina Master Plan are not a significant factor affecting regional deterioration of air quality or localized NAAQS exceedances.

- Transportation system performance statistics show that while VMT increases slightly with the Santolina Master Plan scenario compared to the MTP scenario, VHT and VHD decrease and average speed increases. This indicates that the transportation network is operating more efficiently with less delay and travel time, and slightly faster speeds. The VMT increases result in about 3% more daily CO emissions with the Santolina scenario; however, this level of increase is not anticipated to result in regional deterioration of air quality given current ambient CO levels, which are less than 30 % of the NAAQS.
- The CO hot-spot analysis of the four highest volume intersections evaluated in the Level B Transportation Master Plan shows very low CO levels that do not approach or exceed the NAAQS or LMP standards. These results are typical for recent CO hot-spot analyses in the urban area and largely reflect declining emission rates, which are based on improvements in future vehicle emissions technology.
- The EPA has recently proposed that the O_3 standard be lowered to a level that could result in the region exceeding the new standard and thus requiring transportation control measures. Because modeling and analysis protocols are under study and have not been established in the Albuquerque urban area, the AQIA does not include a quantitative O_3 evaluation for the Santolina Master Plan. It is likely that future phases of the Master Plan will be required to evaluate O_3 in more detail.
- Although the Santolina Master Plan is projected to create some additional VMT in the urban area, the magnitude of the EPA-projected MSAT reductions are so great that MSAT emissions are likely to be lower in the future.

7. References

Albuquerque-Bernalillo County Air Quality Control Board. 2010. State Implementation Plan for Air Quality.

Albuquerque-Bernalillo County Planning Department. 1991. Planned Communities Criteria: Policy Element.

Albuquerque Environmental Health Department Air Quality Division: Control Strategies Section. 2004. State Implementation Plan Revision: Limited Maintenance Plan for Carbon Monoxide. Albuquerque/Bernalillo County, New Mexico.

Bohannan Huston Inc. 2016. Level B Planned Community Technical Report for Santolina Level B Master Plan: Transportation Master Plan.

Environmental Protection Agency (EPA). 1992. Guideline for Modeling Carbon Monoxide from Roadway Intersections. EPA-454/R-92-005.

EPA. 2014. MOVES (Motor Vehicle Emission Simulator). Available online at: www.epa.gov/otaq/models/moves/.

EPA. 2015. Using MOVES2014 in Project Level Carbon Monoxide Analyses, EPA-420-B-15-028. Available online at: www.epa.gov/otaq/models/moves/.

Federal Highway Administration (FHWA). 2012. Interim Guidance Update on Mobile Source Air Toxic Analysis in NEPA. Available online at: http://www.fhwa.dot.gov/environment/air_quality/air_toxics/policy_and_guidance/aqintguidmem.cfm.

FHWA. 2014. Carbon Monoxide (CO) Categorical Hot Spot Finding process. Available online at: https://www.fhwa.dot.gov/environment/air_quality/conformity/policy_and_guidance/cmcf/hotspot_finding.cfm.

Mid-Region Metropolitan Planning Organization (MRMPO). 2015. Futures 2040 MTP.

Planning Technologies, LLC. 2016. Transportation Analysis for the Master Planned Community at Santolina: Travel Demand Forecasting I: Socioeconomic Data and Analysis of Travel Demand Forecasts.

Western Albuquerque Land Holdings LLC. 2016. Santolina Level B Plan: A New Community for a New Economy.

Appendix A – Regional Daily Roadway Performance Summary Statistics and CO Emission Rates by Roadway Functional Class

Regional Daily Roadway Performance Summary Statistics and CO Emission Rates by Roadway Functional Class

MTP SCENARIO (2040)

Region	Modeled Functiona Class	Daily Total VMT	Daily Total VHT	Average Speed	Factors (grams per VMT)	Daily Emissions (total grams per day)	Daily Emissions (total tons per day)
Urban	High Speed Ramp	188,720	3,644	51.8	0.9601	181,183.82	0.200
Urban	Principal Arterial	6,146,000	273,199	22.5	1.0480	6,440,928.36	7.100
Urban	Minor Arterial	3,513,482	143,569	24.5	0.9847	3,459,848.51	3.814
Urban	Collector	2,253,219	87,216	25.8	0.9721	2,190,378.50	2.414
Urban	Local	126,016	5,140	24.5	0.9847	124,092.38	0.137
Urban	Frontage	327,772	8,253	39.7	0.9425	308,941.29	0.341
Urban	Freeway	8,312,062	207,725	40.0	0.9381	7,797,708.62	8.596
Urban	Off ramp	216,166	20,476	10.6	1.2181	263,309.13	0.290
Urban	On ramp	237,948	29,120	8.2	1.4818	352,585.26	0.389
Urban	Limited Access	4,222,561	140,110	30.1	0.9042	3,818,233.23	4.209
Rural	Minor Collector	138,817	3,058	45.4	0.9542	132,464.82	0.146
Rural	Principal Arterial	51,457	1,223	42.1	0.9550	49,142.70	0.054
Rural	Minor Arterial	199,131	3,796	52.5	0.9888	196,899.42	0.217
Rural	Major Collector	928,786	25,588	36.3	0.9569	888,747.92	0.980
Rural	Local	7,122	190	37.6	0.9562	6,810.30	0.008
Rural	Frontage	3,260	110	29.7	0.9622	3,136.92	0.003
Rural	Freeway	2,688,346	36,538	73.6	1.3470	3,621,299.35	3.992
Rural	Off ramp	10,756	423	25.4	0.9241	9,939.98	0.011
Rural	On ramp	16,078	1,232	13.1	1.1109	17,861.26	0.020
		29,587,699	**990,609**	**29.9**		**29,863,511.78**	**32.919**

SANTOLINA BUILD SCENARIO (2040)

Region	Modeled Functiona Class	Daily Total VMT	Daily Total VHT	Average Speed	Emission Factors (grams per	Daily Emissions (total grams per day)	Daily Emissions (total tons per day)
Urban	High Speed Ramp	190,932	3,757	50.8	0.9591	183,118.68	0.202
Urban	Principal Arterial	6,517,573	269,970	24.1	1.0150	6,615,356.04	7.292
Urban	Minor Arterial	3,538,950	124,416	28.4	0.9668	3,421,516.79	3.772
Urban	Collector	2,283,877	84,729	27.0	0.9694	2,213,913.65	2.440
Urban	Local	133,300	5,245	25.4	0.9847	131,265.23	0.145
Urban	Frontage	306,531	7,703	39.8	0.9425	288,920.90	0.318
Urban	Freeway	8,872,483	222,502	39.9	0.9381	8,323,450.64	9.175
Urban	Off ramp	214,096	18,278	11.7	1.1600	248,355.75	0.274
Urban	On ramp	234,725	26,981	8.7	1.3748	322,693.47	0.356
Urban	Limited Access	4,039,300	131,880	30.6	0.9052	3,656,495.34	4.031
Rural	Minor Collector	103,689	2,365	43.8	0.9545	98,972.30	0.109
Rural	Principal Arterial	58,809	1,575	37.3	0.9562	56,232.87	0.062
Rural	Minor Arterial	219,113	4,214	52.0	0.9803	214,794.18	0.237
Rural	Major Collector	997,838	29,240	34.1	0.9578	955,744.31	1.054
Rural	Local	123,471	3,399	36.3	0.9569	118,148.79	0.130
Rural	Frontage	3,046	102	29.7	0.9622	2,930.59	0.003
Rural	Freeway	3,026,843	41,951	72.2	1.2746	3,858,136.97	4.253
Rural	Off ramp	16,864	679	24.8	0.9241	15,584.26	0.017
Rural	On ramp	20,738	1,748	11.9	1.1600	24,056.30	0.027
		30,902,177	**980,732**	**31.5**		**30,749,687.05**	**33.896**

Appendix B – CAL3QHC Input and Output Data

Coors-Dennis Chavez/Rio Bravo Intersection: MTP Scenario

Lane Group	EBL	EBT	EBR	WBL	WBT	WBR	NBL	NBT	NBR	SBL	SBT	SBR
Lane Configurations												
Traffic Volume (vph)	402	475	291	495	537	683	181	1265	310	572	1679	334
Future Volume (vph)	402	475	291	495	537	683	181	1265	310	572	1679	334
Ideal Flow (vphpl)	1900	1900	1900	1900	1900	1900	1900	1900	1900	1900	1900	1900
Storage Length (ft)	500		0	500		300	500		300	500		0
Storage Lanes	2		1	2		1	2		1	2		1
Taper Length (ft)	25			25			25			25		
Lane Util. Factor	0.97	0.95	1.00	0.97	0.95	1.00	0.97	0.91	1.00	0.97	0.91	1.00
Frt			0.850			0.850			0.850			0.850
Flt Protected	0.950			0.950			0.950			0.950		
Satd. Flow (prot)	3433	3539	1583	3433	3539	1583	3433	5085	1583	3433	5085	1583
Flt Permitted	0.950			0.950			0.950			0.950		
Satd. Flow (perm)	3433	3539	1583	3433	3539	1583	3433	5085	1583	3433	5085	1583
Right Turn on Red			Yes			Yes			Yes			Yes
Satd. Flow (RTOR)			95			55			95			55
Link Speed (mph)		45			45			45			45	
Link Distance (ft)		5380			10031			5580			3639	
Travel Time (s)		81.5			152.0			84.5			55.1	
Peak Hour Factor	0.92	0.92	0.92	0.92	0.92	0.92	0.92	0.92	0.92	0.92	0.92	0.92
Adj. Flow (vph)	437	516	316	538	584	742	197	1375	337	622	1825	363
Shared Lane Traffic (%)												
Lane Group Flow (vph)	437	516	316	538	584	742	197	1375	337	622	1825	363
Enter Blocked Intersection	No	No	No	No	No	No	No	No	No	No	No	No
Lane Alignment	Left	Left	Right	Left	Left	Right	Left	Left	Right	Left	Left	Right
Median Width(ft)		24			24			24			24	
Link Offset(ft)		0			0			0			0	
Crosswalk Width(ft)		16			16			16			16	
Two way Left Turn Lane												
Headway Factor	1.00	1.00	1.00	1.00	1.00	1.00	1.00	1.00	1.00	1.00	1.00	1.00
Turning Speed (mph)	15		9	15		9	15		9	15		9
Number of Detectors	1	2	1	1	2	1	1	2	1	1	2	1
Detector Template	Left	Thru	Right	Left	Thru	Right	Left	Thru	Right	Left	Thru	Right
Leading Detector (ft)	20	100	20	20	100	20	20	100	20	20	100	20
Trailing Detector (ft)	0	0	0	0	0	0	0	0	0	0	0	0
Detector 1 Position(ft)	0	0	0	0	0	0	0	0	0	0	0	0
Detector 1 Size(ft)	20	6	20	20	6	20	20	6	20	20	6	20
Detector 1 Type	Cl+Ex	Cl+Ex	Cl+Ex	Cl+Ex	Cl+Ex	Cl+Ex	Cl+Ex	Cl+Ex	Cl+Ex	Cl+Ex	Cl+Ex	Cl+Ex
Detector 1 Channel												
Detector 1 Extend (s)	0.0	0.0	0.0	0.0	0.0	0.0	0.0	0.0	0.0	0.0	0.0	0.0
Detector 1 Queue (s)	0.0	0.0	0.0	0.0	0.0	0.0	0.0	0.0	0.0	0.0	0.0	0.0
Detector 1 Delay (s)	0.0	0.0	0.0	0.0	0.0	0.0	0.0	0.0	0.0	0.0	0.0	0.0
Detector 2 Position(ft)		94			94			94			94	
Detector 2 Size(ft)		6			6			6			6	
Detector 2 Type		Cl+Ex			Cl+Ex			Cl+Ex			Cl+Ex	
Detector 2 Channel												
Detector 2 Extend (s)		0.0			0.0			0.0			0.0	
Turn Type	Prot	NA	pm+ov	Prot	NA	pm+ov	Prot	NA	pm+ov	Prot	NA	pm+ov
Protected Phases	7	4	5	3	8	1	5	2	3	1	6	7
Permitted Phases			4			8			2			6

Lane Group	EBL	EBT	EBR	WBL	WBT	WBR	NBL	NBT	NBR	SBL	SBT	SBR
Detector Phase	7	4	5	3	8	1	5	2	3	1	6	7
Switch Phase												
Minimum Initial (s)	5.0	5.0	5.0	5.0	5.0	5.0	5.0	5.0	5.0	5.0	5.0	5.0
Minimum Split (s)	9.5	22.5	9.5	9.5	22.5	9.5	9.5	22.5	9.5	9.5	22.5	9.5
Total Split (s)	20.8	23.0	14.8	24.3	26.5	34.0	14.8	38.7	24.3	34.0	57.9	20.8
Total Split (%)	17.3%	19.2%	12.3%	20.3%	22.1%	28.3%	12.3%	32.3%	20.3%	28.3%	48.3%	17.3%
Maximum Green (s)	16.3	18.5	10.3	19.8	22.0	29.5	10.3	34.2	19.8	29.5	53.4	16.3
Yellow Time (s)	3.5	3.5	3.5	3.5	3.5	3.5	3.5	3.5	3.5	3.5	3.5	3.5
All-Red Time (s)	1.0	1.0	1.0	1.0	1.0	1.0	1.0	1.0	1.0	1.0	1.0	1.0
Lost Time Adjust (s)	0.0	0.0	0.0	0.0	0.0	0.0	0.0	0.0	0.0	0.0	0.0	0.0
Total Lost Time (s)	4.5	4.5	4.5	4.5	4.5	4.5	4.5	4.5	4.5	4.5	4.5	4.5
Lead/Lag	Lead	Lag	Lead	Lead	Lag	Lead	Lead	Lag	Lead	Lead	Lag	Lead
Lead-Lag Optimize?	Yes	Yes	Yes	Yes	Yes	Yes	Yes	Yes	Yes	Yes	Yes	Yes
Vehicle Extension (s)	3.0	3.0	3.0	3.0	3.0	3.0	3.0	3.0	3.0	3.0	3.0	3.0
Recall Mode	None	None	None	None	None	None	None	C-Max	None	None	C-Max	None
Walk Time (s)		7.0			7.0			7.0			7.0	
Flash Dont Walk (s)		11.0			11.0			11.0			11.0	
Pedestrian Calls (#/hr)		0			0			0			0	
Act Effct Green (s)	16.3	18.5	33.0	19.8	22.0	56.0	10.0	34.2	58.5	29.5	53.7	74.5
Actuated g/C Ratio	0.14	0.15	0.28	0.16	0.18	0.47	0.08	0.28	0.49	0.25	0.45	0.62
v/c Ratio	0.94	0.95	0.63	0.95	0.90	0.97	0.69	0.95	0.41	0.74	0.80	0.36
Control Delay	80.4	77.9	32.4	77.3	66.3	54.8	66.6	56.5	15.5	47.8	32.0	10.5
Queue Delay	0.0	0.0	0.0	0.0	0.0	0.0	0.0	0.0	0.0	0.0	0.0	0.0
Total Delay	80.4	77.9	32.4	77.3	66.3	54.8	66.6	56.5	15.5	47.8	32.0	10.5
LOS	F	E	C	E	E	D	E	E	B	D	C	B
Approach Delay		67.4			64.9			50.3			32.7	
Approach LOS		E			E			D			C	

Intersection Summary	
Area Type: Other	
Cycle Length: 120	
Actuated Cycle Length: 120	
Offset: 0 (0%), Referenced to phase 2:NBT and 6:SBT, Start of Green	
Natural Cycle: 100	
Control Type: Actuated-Coordinated	
Maximum v/c Ratio: 0.97	
Intersection Signal Delay: 50.3	Intersection LOS: D
Intersection Capacity Utilization 89.5%	ICU Level of Service E
Analysis Period (min) 15	

Splits and Phases: 17: Coors & Dennis Chavez/Rio Bravo

2040 PM No Build

Coors and DennisC/RioB

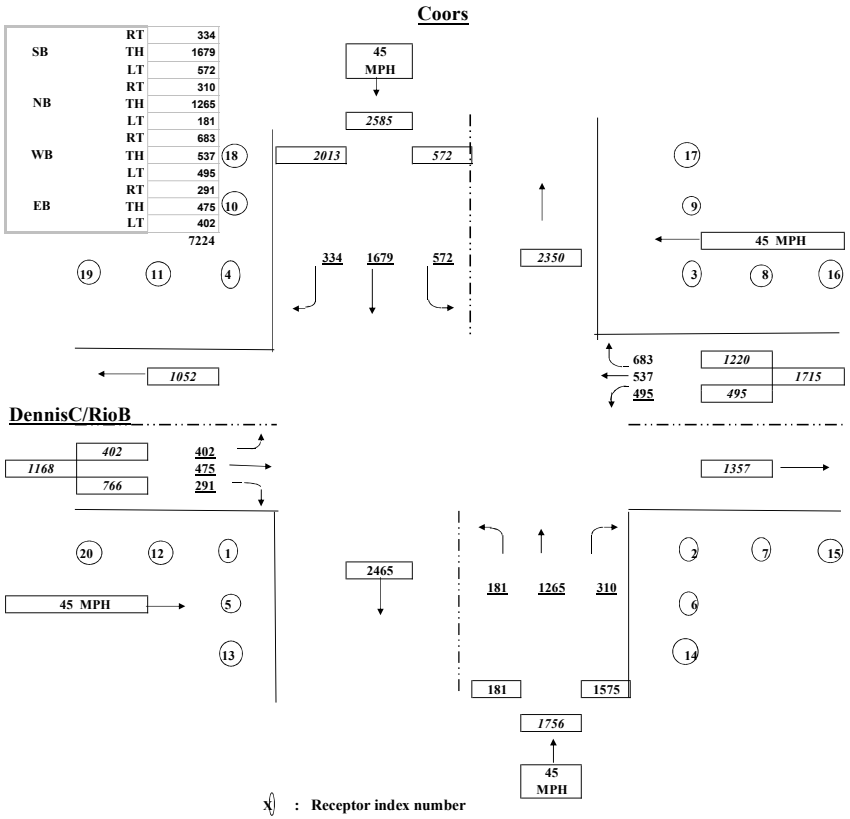

x() : Receptor index number

▭ : Approaching speed

F:\Santolina\1 Coors-DennisChavez\[15.xls]A

INTERSECTION CONFIGURATION , SIGNAL SETTING, AND EMISSION FACTOR

	EBL	EBT	EBR	WBL	WBT	WBR	NBL	NBT	NBR	SBL	SBT	SBR
LeftTurn Code*	1			1			1			1		
No. of Lanes	2	2	1	2	2	1	2	3	1	2	3	1
Lane Width (ft)	12	12	12	12	12	12	12	12	12	12	12	12
Median (ft)		4			4			4			4	
Offset Receptors and Lanes		0			0			0			0	
Cycle Length (sec)	120	120	120	120	120	120	120	120	120	120	120	120
1st Permitted Phase (inc yellow)	3.5	3.5	3.5	3.5	3.5	3.5	3.5	3.5	3.5	3.5	3.5	3.5
2nd Permitted Phase (inc yellow)	16.3	18.5	10.3	19.8	22	29.5	10.3	34.2	19.8	29.5	53.4	16.3
3rd Permitted Phase (inc yellow)												
Red Time (sec)	100	98	106	97	95	87	106	82	97	87	63	100
Lost Time (Incld'd. above)	0	0	0	0	0	0	0	0	0	0	0	0
Saturation Flow Rate (vphpl)	1900	1900	1900	1900	1900	1900	1900	1900	1900	1900	1900	1900
Speed (mph)		45			45			45			45	

* Left Turn Code : 1 - Exclusive left 2 - Left shared with through (IF 2 WBL should not be counted as a lane i.e. all LT lanes should be tallied under through)

Quee Links 800
Freeflow Links 1000

CALCULATION OF RECEPTOR'S COORDINATES

	COORDINATES			
RECEPTOR	X	Y	X	Y
#1			-66	-66
#2			78	-54
#3			66	66
#4			-78	54
#5			-66	-146
#6			78	-134
#7			158	-54
#8			146	66
#9			66	146
#10			-78	134
#11			-158	54
#12			-146	-66
#13			-66	-266
#14			78	-254
#15			278	-54
#16			266	66
#17			66	266
#18			-78	254
#19			-278	54
#20			-266	-66

Number of Links 24

CALCULATION OF LINK COORDINATES (w/ widths and lanes)

LINK	X1	Y1	X2	Y2	Width	Lanes
EB Approach	-1000	-26	0	-26	56	3
EB Departure	0	-26	1000	-26	44	2
EB Left	-1000	-2	0	-2	44	2
WB Approach	1000	26	0	26	56	3
WB Departure	0	26	-1000	26	44	2
WB Left	1000	2	0	2	44	2
NB Approach	32	-1000	32	0	68	4
NB Departure	32	0	32	1000	56	3
NB Left	2	-1000	2	0	44	2
SB Approach	-32	1000	-32	0	68	4
SB Departure	-32	0	-32	-1000	56	3
SB Left	-2	1000	-2	0	44	2
EB Left Queue	-56	-2	-856	-2	24	2
EB Through Queu	-56	-26	-856	-26	24	2
EB Right Queue	-56	-44	-856	-44	12	1
WB Left Queue	56	2	856	2	24	2
WB Through Quei	56	26	856	26	24	2
WB Right Queue	56	44	856	44	12	1
NB Left Queue	2	-44	2	-844	24	2
NB Through Queu	32	-44	32	-844	36	3
NB Right Queue	56	-44	56	-844	12	1
SB Left Queue	-2	44	-2	844	24	2
SB Through Queu	-32	44	-32	844	36	3
SB Right Queue	-56	44	-56	844	12	1

```
1                    CAL3QHC (93157)
                     IBM-PC VERSION (2.01)


                     RUN NAME: 15.DAT

                     RUN BEGIN ON 01/01/05 AT 18:37

                     CAL3QHC: LINE SOURCE DISPERSION MODEL - VERSION 2.0,
JANUARY 1992

      JOB: Santolina                                            RUN: 1-5
Coors and DennisC/RioB No Build

       SITE & METEOROLOGICAL VARIABLES
       -------------------------------
       VS =   0.0 CM/S       VD =   0.0 CM/S       Z0 = 175. CM
        U =  1.0 M/S         CLAS =   4  (D)     ATIM =  60. MINUTES
MIXH =  1000. M   AMB =  3.0 PPM

       LINK VARIABLES
       --------------
         LINK DESCRIPTION     *         LINK COORDINATES (FT)          *
LENGTH  BRG TYPE   VPH    EF      H   W    V/C QUEUE
                              *   X1        Y1        X2        Y2     *
(FT)  (DEG)            (G/MI)  (FT) (FT)       (VEH)
      ------------------------*----------------------------------------*-
-------------------------------------------------------------
       1. EB A                *  -1000.0     -26.0       0.0     -26.0 *
1000.    90. AG    766.   0.9   0.0 56.0
       2. EB D                *      0.0     -26.0    1000.0     -26.0 *
1000.    90. AG   1357.   0.9   0.0 44.0
       3. EB L                *  -1000.0      -2.0       0.0      -2.0 *
1000.    90. AG    402.   0.9   0.0 44.0
       4. WB A                *   1000.0      26.0       0.0      26.0 *
1000.   270. AG   1220.   0.9   0.0 56.0
       5. WB D                *      0.0      26.0   -1000.0      26.0 *
1000.   270. AG   1052.   0.9   0.0 44.0
       6. WB L                *   1000.0       2.0       0.0       2.0 *
1000.   270. AG    495.   0.9   0.0 44.0
       7. NB A                *     32.0   -1000.0      32.0       0.0 *
1000.   360. AG   1575.   0.9   0.0 68.0
       8. NB D                *     32.0       0.0      32.0    1000.0 *
1000.   360. AG   2350.   0.9   0.0 56.0
       9. NB L                *      2.0   -1000.0       2.0       0.0 *
1000.   360. AG    181.   0.9   0.0 44.0
      10. SB A                *    -32.0    1000.0     -32.0       0.0 *
1000.   180. AG   2013.   0.9   0.0 68.0
      11. SB D                *    -32.0       0.0     -32.0   -1000.0 *
1000.   180. AG   2465.   0.9   0.0 56.0
      12. SB L                *     -2.0    1000.0      -2.0       0.0 *
1000.   180. AG    572.   0.9   0.0 44.0
      13. EB L Q              *    -56.0      -2.0    -187.0      -2.0 *
131.   270. AG     19. 100.0   0.0 24.0 0.85   6.7
```

```
      14. EB T Q              *    -56.0     -26.0    -212.1     -26.0 *
156.   270. AG     18. 100.0   0.0 24.0 0.88   7.9
      15. EB R Q              *    -56.0     -44.0   -1810.3     -44.2 *
1754.   270. AG     10. 100.0   0.0 12.0 2.05  89.1
      16. WB L Q              *     56.0       2.0     213.4       2.0 *
157.    90. AG     18. 100.0   0.0 24.0 0.87   8.0
      17. WB T Q              *     56.0      26.0     216.6      26.0 *
161.    90. AG     18. 100.0   0.0 24.0 0.85   8.2
      18. WB R  Q             *     56.0      44.0    2900.8      44.4 *
2845.    90. AG      8. 100.0   0.0 12.0 1.54 144.5
      19. NB L  Q             *      2.0     -44.0       2.0    -325.2 *
281.   180. AG     20. 100.0   0.0 24.0 1.09  14.3
      20. NB T  Q             *     32.0     -44.0      32.0    -242.8 *
199.   180. AG     23. 100.0   0.0 36.0 0.81  10.1
      21. NB R  Q             *     56.0     -44.0      56.0    -140.0 *
96.   180. AG      9. 100.0   0.0 12.0 0.64   4.9
      22. SB L  Q             *     -2.0      44.0      -2.0     180.1 *
136.   360. AG     16. 100.0   0.0 24.0 0.65   6.9
      23. SB T  Q             *    -32.0      44.0     -32.0     236.6 *
193.   360. AG     18. 100.0   0.0 36.0 0.68   9.8
      24. SB R  Q             *    -56.0      44.0     -56.0    1287.0 *
1243.   360. AG      9. 100.0   0.0 12.0 1.41  63.1
1
```

PAGE 2

JOB: Santolina RUN: 1-5

Coors and DennisC/RioB No Build

ADDITIONAL QUEUE LINK PARAMETERS

```
         LINK DESCRIPTION     *    CYCLE    RED     CLEARANCE  APPROACH
SATURATION   IDLE   SIGNAL   ARRIVAL
                              *    LENGTH   TIME    LOST TIME    VOL
FLOW RATE   EM FAC   TYPE     RATE
                              *     (SEC)   (SEC)    (SEC)      (VPH)
(VPH)    (gm/hr)
      -------------------------*-----------------------------------------
-------------------------------------
      13. EB L Q              *     120      100       3.0       402
1900       4.20      3        3
      14. EB T Q              *     120       98       3.0       475
1900       4.20      3        3
      15. EB R Q              *     120      106       3.0       291
1900       4.20      3        3
      16. WB L Q              *     120       97       3.0       495
1900       4.20      3        3
      17. WB T Q              *     120       95       3.0       537
1900       4.20      3        3
      18. WB R  Q             *     120       87       3.0       683
1900       4.20      3        3
      19. NB L  Q             *     120      106       3.0       310
1900       4.20      3        3
      20. NB T  Q             *     120       82       3.0      1265
1900       4.20      3        3
```

```
      21. NB R  Q             *     120       97       3.0       181
1900       4.20      3        3
      22. SB L  Q             *     120       87       3.0       572
1900       4.20      3        3
      23. SB T  Q             *     120       63       3.0      1679
1900       4.20      3        3
      24. SB R  Q             *     120      100       3.0       334
1900       4.20      3        3
```

RECEPTOR LOCATIONS

RECEPTOR	COORDINATES (FT) X	Y	Z
1. 1	-66.0	-66.0	5.0
2. 2	78.0	-54.0	5.0
3. 3	66.0	66.0	5.0
4. 4	-78.0	54.0	5.0
5. 5	-66.0	-146.0	5.0
6. 6	78.0	-134.0	5.0
7. 7	158.0	-54.0	5.0
8. 8	146.0	66.0	5.0
9. 9	66.0	146.0	5.0
10. 10	-78.0	134.0	5.0
11. 11	-158.0	54.0	5.0
12. 12	-146.0	-66.0	5.0
13. 13	-66.0	-266.0	5.0
14. 14	78.0	-254.0	5.0
15. 15	278.0	-54.0	5.0
16. 16	266.0	66.0	5.0
17. 17	66.0	266.0	5.0
18. 18	-78.0	254.0	5.0
19. 19	-278.0	54.0	5.0
20. 20	-266.0	-66.0	5.0

1

JOB: Santolina RUN: 1-5
Coors and DennisC/RioB No Build

MODEL RESULTS

REMARKS : In search of the angle corresponding to the maximum concentration, only the first angle, of the angles with same maximum concentrations, is indicated as maximum.

WIND ANGLE RANGE: 0.-360.

```
 WIND  * CONCENTRATION
 ANGLE *      (PPM)
 (DEGR)* REC1  REC2  REC3  REC4  REC5  REC6  REC7  REC8  REC9  REC10
REC11 REC12 REC13 REC14 REC15 REC16 REC17 REC18 REC19 REC20
```

```
 ------*-----------------------------------------------------------------
-------------------------------------------------------
   0.  *   3.1   3.1   3.1   3.1   3.0   3.0   3.0   3.0   3.1   3.0
3.0   3.0   3.1   3.0   3.0   3.0   3.1   3.0   3.0   3.0
   5.  *   3.1   3.0   3.1   3.1   3.1   3.0   3.0   3.0   3.1   3.1
3.0   3.0   3.1   3.0   3.0   3.0   3.1   3.1   3.0   3.0
  10.  *   3.1   3.0   3.0   3.1   3.1   3.0   3.0   3.0   3.0   3.1
3.0   3.0   3.1   3.0   3.0   3.0   3.0   3.1   3.0   3.0
  15.  *   3.1   3.0   3.0   3.1   3.1   3.0   3.0   3.0   3.0   3.1
3.0   3.0   3.1   3.0   3.0   3.0   3.0   3.1   3.0   3.0
  20.  *   3.0   3.0   3.0   3.1   3.1   3.0   3.0   3.0   3.0   3.1
3.0   3.0   3.1   3.0   3.0   3.0   3.0   3.1   3.0   3.0
  25.  *   3.1   3.0   3.0   3.1   3.1   3.0   3.0   3.0   3.0   3.1
3.0   3.0   3.1   3.0   3.0   3.0   3.0   3.1   3.0   3.0
  30.  *   3.1   3.0   3.0   3.1   3.1   3.0   3.0   3.0   3.0   3.1
3.0   3.0   3.1   3.0   3.0   3.0   3.0   3.1   3.0   3.0
  35.  *   3.1   3.0   3.0   3.1   3.1   3.0   3.0   3.0   3.0   3.1
3.0   3.0   3.1   3.0   3.0   3.0   3.0   3.1   3.0   3.0
  40.  *   3.1   3.0   3.0   3.1   3.1   3.0   3.0   3.0   3.0   3.1
3.0   3.0   3.1   3.0   3.0   3.0   3.0   3.1   3.0   3.0
  45.  *   3.1   3.0   3.0   3.1   3.1   3.0   3.0   3.0   3.0   3.1
3.0   3.0   3.1   3.0   3.0   3.0   3.0   3.1   3.0   3.0
  50.  *   3.1   3.0   3.0   3.1   3.1   3.0   3.0   3.0   3.0   3.1
3.0   3.0   3.1   3.0   3.0   3.0   3.0   3.1   3.0   3.0
  55.  *   3.1   3.1   3.0   3.1   3.1   3.0   3.1   3.0   3.0   3.1
3.0   3.0   3.1   3.0   3.1   3.0   3.0   3.1   3.0   3.0
  60.  *   3.1   3.1   3.0   3.1   3.1   3.0   3.1   3.0   3.0   3.1
3.0   3.0   3.1   3.0   3.1   3.0   3.0   3.1   3.0   3.0
  65.  *   3.1   3.1   3.0   3.0   3.1   3.0   3.1   3.0   3.0   3.0
3.0   3.0   3.1   3.0   3.1   3.0   3.0   3.0   3.0   3.0
  70.  *   3.1   3.1   3.0   3.0   3.1   3.0   3.1   3.0   3.0   3.0
3.0   3.0   3.1   3.0   3.1   3.0   3.0   3.0   3.0   3.0
  75.  *   3.1   3.1   3.0   3.0   3.1   3.0   3.1   3.0   3.0   3.0
3.0   3.0   3.1   3.0   3.1   3.0   3.0   3.0   3.0   3.0
  80.  *   3.1   3.1   3.0   3.0   3.1   3.0   3.1   3.0   3.0   3.0
3.0   3.0   3.1   3.0   3.1   3.0   3.0   3.0   3.0   3.0
  85.  *   3.1   3.1   3.0   3.1   3.1   3.0   3.1   3.0   3.0   3.1
3.0   3.0   3.1   3.0   3.1   3.0   3.0   3.1   3.0   3.0
  90.  *   3.1   3.0   3.0   3.1   3.1   3.0   3.0   3.0   3.0   3.1
3.0   3.0   3.1   3.0   3.0   3.0   3.0   3.1   3.0   3.0
  95.  *   3.1   3.0   3.0   3.1   3.1   3.0   3.0   3.0   3.0   3.1
3.0   3.0   3.1   3.0   3.0   3.0   3.0   3.1   3.0   3.0
 100.  *   3.1   3.0   3.0   3.0   3.1   3.0   3.0   3.0   3.0   3.0
3.0   3.0   3.1   3.0   3.0   3.0   3.0   3.0   3.0   3.0
 105.  *   3.1   3.0   3.0   3.0   3.1   3.0   3.0   3.0   3.0   3.0
3.0   3.0   3.1   3.0   3.0   3.0   3.0   3.0   3.0   3.0
 110.  *   3.1   3.0   3.0   3.0   3.1   3.0   3.0   3.0   3.0   3.0
3.0   3.0   3.1   3.0   3.0   3.0   3.0   3.0   3.0   3.0
 115.  *   3.1   3.0   3.0   3.0   3.1   3.0   3.0   3.0   3.0   3.0
3.0   3.0   3.1   3.0   3.0   3.0   3.0   3.0   3.0   3.0
 120.  *   3.1   3.0   3.0   3.0   3.1   3.0   3.0   3.0   3.0   3.1
3.0   3.0   3.1   3.0   3.0   3.0   3.0   3.1   3.0   3.0
 125.  *   3.1   3.0   3.0   3.0   3.1   3.0   3.0   3.0   3.0   3.1
3.0   3.0   3.1   3.0   3.0   3.0   3.0   3.1   3.0   3.0
```

```
 130.  *   3.1   3.0   3.0   3.0   3.1   3.0   3.0   3.0   3.0   3.1
3.0   3.0   3.1   3.0   3.0   3.0   3.0   3.1   3.0   3.0
 135.  *   3.1   3.0   3.0   3.0   3.1   3.0   3.0   3.0   3.0   3.1
3.0   3.0   3.1   3.0   3.0   3.0   3.0   3.1   3.0   3.0
 140.  *   3.1   3.0   3.0   3.0   3.1   3.0   3.0   3.0   3.0   3.1
3.0   3.0   3.1   3.0   3.0   3.0   3.0   3.1   3.0   3.0
 145.  *   3.1   3.0   3.0   3.0   3.1   3.0   3.0   3.0   3.0   3.1
3.0   3.0   3.1   3.0   3.0   3.0   3.0   3.1   3.0   3.0
 150.  *   3.1   3.0   3.0   3.0   3.1   3.0   3.0   3.0   3.0   3.1
3.0   3.0   3.1   3.0   3.0   3.0   3.0   3.1   3.0   3.0
 155.  *   3.1   3.0   3.0   3.1   3.1   3.0   3.0   3.0   3.0   3.1
3.0   3.0   3.1   3.0   3.0   3.0   3.0   3.1   3.0   3.0
 160.  *   3.1   3.0   3.0   3.1   3.1   3.0   3.0   3.0   3.0   3.0
3.0   3.0   3.1   3.0   3.0   3.0   3.0   3.1   3.0   3.0
 165.  *   3.1   3.0   3.0   3.1   3.1   3.0   3.0   3.0   3.0   3.0
3.0   3.0   3.1   3.0   3.0   3.0   3.0   3.1   3.0   3.0
 170.  *   3.1   3.0   3.0   3.1   3.1   3.0   3.0   3.0   3.0   3.0
3.0   3.0   3.1   3.0   3.0   3.0   3.0   3.1   3.0   3.0
 175.  *   3.1   3.0   3.0   3.1   3.1   3.0   3.0   3.0   3.0   3.0
3.0   3.0   3.1   3.0   3.0   3.0   3.0   3.0   3.0   3.0
 180.  *   3.1   3.0   3.0   3.1   3.1   3.0   3.0   3.0   3.0   3.0
3.0   3.0   3.1   3.0   3.0   3.0   3.1   3.0   3.0   3.0
 185.  *   3.1   3.1   3.0   3.0   3.1   3.0   3.0   3.0   3.1   3.0
3.0   3.0   3.1   3.0   3.0   3.0   3.1   3.0   3.0   3.0
 190.  *   3.0   3.1   3.0   3.0   3.0   3.1   3.0   3.0   3.1   3.0
3.0   3.0   3.0   3.1   3.0   3.0   3.1   3.0   3.0   3.0
 195.  *   3.0   3.1   3.0   3.0   3.0   3.1   3.0   3.0   3.1   3.0
3.0   3.0   3.0   3.1   3.0   3.0   3.1   3.0   3.0   3.0
 200.  *   3.0   3.1   3.0   3.0   3.0   3.1   3.0   3.0   3.1   3.0
3.0   3.0   3.0   3.1   3.0   3.0   3.1   3.0   3.0   3.0
 205.  *   3.0   3.2   3.1   3.0   3.0   3.1   3.0   3.0   3.1   3.0
3.0   3.0   3.0   3.1   3.0   3.0   3.1   3.0   3.0   3.0
1
```


JOB: Santolina RUN: 1-5
Coors and DennisC/RioB No Build

```
 WIND  * CONCENTRATION
 ANGLE *      (PPM)
 (DEGR)* REC1  REC2  REC3  REC4  REC5  REC6  REC7  REC8  REC9  REC10
REC11 REC12 REC13 REC14 REC15 REC16 REC17 REC18 REC19 REC20
 ------*-------------------------------------------------------------------
-------------------------------------------------------
 210.  *   3.0   3.2   3.1   3.0   3.0   3.1   3.0   3.0   3.1   3.0
3.0   3.0   3.0   3.1   3.0   3.0   3.1   3.0   3.0   3.0
 215.  *   3.0   3.1   3.1   3.0   3.0   3.0   3.0   3.0   3.1   3.0
3.0   3.0   3.0   3.0   3.0   3.0   3.1   3.0   3.0   3.0
 220.  *   3.0   3.1   3.1   3.0   3.0   3.1   3.0   3.0   3.1   3.0
3.0   3.0   3.0   3.0   3.0   3.0   3.1   3.0   3.0   3.0
 225.  *   3.0   3.1   3.1   3.0   3.0   3.1   3.0   3.0   3.1   3.0
3.0   3.0   3.0   3.0   3.0   3.0   3.1   3.0   3.0   3.0
 230.  *   3.0   3.1   3.1   3.0   3.0   3.1   3.0   3.0   3.1   3.0
3.0   3.0   3.0   3.0   3.0   3.0   3.1   3.0   3.0   3.0
```

```
 235.  *   3.0   3.1   3.1   3.0   3.0   3.1   3.0   3.0   3.1   3.0
3.0   3.0   3.0   3.0   3.0   3.0   3.1   3.0   3.0   3.0
 240.  *   3.0   3.1   3.1   3.0   3.0   3.1   3.0   3.0   3.1   3.0
3.0   3.0   3.0   3.0   3.0   3.0   3.1   3.0   3.0   3.0
 245.  *   3.0   3.1   3.1   3.0   3.0   3.1   3.0   3.0   3.1   3.0
3.0   3.0   3.0   3.0   3.0   3.0   3.1   3.0   3.0   3.0
 250.  *   3.0   3.1   3.1   3.0   3.0   3.1   3.0   3.0   3.1   3.0
3.0   3.0   3.0   3.0   3.0   3.0   3.1   3.0   3.0   3.0
 255.  *   3.0   3.0   3.1   3.1   3.0   3.1   3.0   3.0   3.1   3.0
3.1   3.0   3.0   3.0   3.0   3.0   3.1   3.0   3.0   3.0
 260.  *   3.0   3.0   3.1   3.1   3.0   3.1   3.0   3.0   3.1   3.0
3.0   3.0   3.0   3.0   3.0   3.0   3.1   3.0   3.0   3.0
 265.  *   3.0   3.0   3.1   3.0   3.0   3.1   3.0   3.0   3.1   3.0
3.0   3.0   3.0   3.0   3.0   3.0   3.1   3.0   3.0   3.0
 270.  *   3.0   3.0   3.1   3.0   3.0   3.1   3.0   3.0   3.1   3.0
3.0   3.0   3.0   3.0   3.0   3.0   3.1   3.0   3.0   3.0
 275.  *   3.0   3.0   3.1   3.0   3.0   3.1   3.0   3.0   3.1   3.0
3.0   3.0   3.0   3.0   3.0   3.0   3.1   3.0   3.0   3.0
 280.  *   3.0   3.0   3.1   3.0   3.0   3.1   3.0   3.0   3.1   3.0
3.0   3.0   3.0   3.0   3.1   3.0   3.1   3.0   3.0   3.0
 285.  *   3.0   3.0   3.1   3.0   3.0   3.1   3.0   3.0   3.1   3.0
3.0   3.0   3.0   3.0   3.1   3.0   3.1   3.0   3.0   3.0
 290.  *   3.0   3.0   3.1   3.0   3.0   3.1   3.1   3.0   3.1   3.0
3.0   3.0   3.0   3.0   3.1   3.0   3.1   3.0   3.0   3.0
 295.  *   3.0   3.0   3.1   3.0   3.0   3.1   3.1   3.0   3.1   3.0
3.0   3.0   3.0   3.0   3.1   3.0   3.1   3.0   3.0   3.0
 300.  *   3.0   3.0   3.1   3.0   3.0   3.1   3.1   3.0   3.1   3.0
3.0   3.0   3.0   3.0   3.1   3.0   3.1   3.0   3.0   3.0
 305.  *   3.0   3.0   3.1   3.0   3.0   3.1   3.0   3.0   3.1   3.0
3.0   3.0   3.0   3.0   3.1   3.0   3.1   3.0   3.0   3.0
 310.  *   3.0   3.0   3.1   3.0   3.0   3.1   3.0   3.0   3.1   3.0
3.0   3.0   3.0   3.0   3.0   3.0   3.1   3.0   3.0   3.0
 315.  *   3.0   3.0   3.1   3.0   3.0   3.0   3.0   3.0   3.1   3.0
3.0   3.0   3.0   3.1   3.0   3.0   3.1   3.0   3.0   3.0
 320.  *   3.0   3.0   3.1   3.0   3.0   3.0   3.0   3.0   3.1   3.0
3.0   3.0   3.0   3.1   3.0   3.0   3.1   3.0   3.0   3.0
 325.  *   3.0   3.0   3.1   3.0   3.0   3.0   3.0   3.0   3.1   3.0
3.0   3.0   3.0   3.1   3.0   3.0   3.1   3.0   3.0   3.0
 330.  *   3.0   3.0   3.1   3.0   3.0   3.0   3.0   3.0   3.1   3.0
3.0   3.0   3.0   3.1   3.0   3.0   3.1   3.0   3.0   3.0
 335.  *   3.0   3.1   3.1   3.0   3.0   3.0   3.0   3.0   3.1   3.0
3.0   3.0   3.0   3.1   3.0   3.0   3.1   3.0   3.0   3.0
 340.  *   3.0   3.1   3.1   3.0   3.0   3.0   3.0   3.0   3.1   3.0
3.0   3.0   3.0   3.1   3.0   3.0   3.1   3.0   3.0   3.0
 345.  *   3.0   3.1   3.1   3.0   3.0   3.0   3.0   3.0   3.1   3.0
3.0   3.0   3.0   3.0   3.0   3.0   3.1   3.0   3.0   3.0
 350.  *   3.0   3.1   3.1   3.0   3.0   3.0   3.0   3.0   3.1   3.0
3.0   3.0   3.0   3.0   3.0   3.0   3.1   3.0   3.0   3.0
 355.  *   3.0   3.1   3.1   3.0   3.0   3.0   3.0   3.0   3.1   3.0
3.0   3.0   3.0   3.0   3.0   3.0   3.1   3.0   3.0   3.0
 360.  *   3.1   3.1   3.1   3.1   3.0   3.0   3.0   3.0   3.1   3.0
3.0   3.0   3.1   3.0   3.0   3.0   3.1   3.0   3.0   3.0
 -------*-------------------------------------------------------------------
-------------------------------------------------------
```

```
 MAX   *   3.1   3.2   3.1   3.1   3.1   3.1   3.1   3.0   3.1   3.1
3.1   3.0   3.1   3.1   3.1   3.0   3.1   3.1   3.0   3.0
 DEGR. *    0   205     0     0     5   190    55     0     0     5   255
0     0   190    55     0     0     5     0     0

 THE HIGHEST CONCENTRATION IS    3.20 PPM AT  205 DEGREES FROM REC2 .
1
```



```
      JOB: Santolina                                            RUN: 1-5
Coors and DennisC/RioB No Build

      RECEPTOR - LINK MATRIX FOR THE ANGLE PRODUCING
      THE MAXIMUM CONCENTRATION FOR EACH RECEPTOR

          *    CO/LINK  (PPM)
          *    ANGLE (DEGREES)
          *  REC1  REC2  REC3  REC4  REC5  REC6  REC7  REC8  REC9  REC10
REC11 REC12 REC13 REC14 REC15 REC16 REC17 REC18 REC19 REC20
   LINK # *     0   205     0     0     5   190    55     0     0     5
255     0     0   190    55     0     0     5     0     0
   -------*-------------------------------------------------------------
-------------------------------------------------------------
       1  *   0.0   0.0   0.0   0.0   0.0   0.0   0.0   0.0   0.0   0.0
0.0   0.0   0.0   0.0   0.0   0.0   0.0   0.0   0.0   0.0
       2  *   0.0   0.0   0.0   0.0   0.0   0.0   0.1   0.0   0.0   0.0
0.0   0.0   0.0   0.0   0.1   0.0   0.0   0.0   0.0   0.0
       3  *   0.0   0.0   0.0   0.0   0.0   0.0   0.0   0.0   0.0   0.0
0.0   0.0   0.0   0.0   0.0   0.0   0.0   0.0   0.0   0.0
       4  *   0.0   0.0   0.0   0.0   0.0   0.0   0.0   0.0   0.0   0.0
0.0   0.0   0.0   0.0   0.0   0.0   0.0   0.0   0.0   0.0
       5  *   0.0   0.0   0.0   0.0   0.0   0.0   0.0   0.0   0.0   0.0
0.1   0.0   0.0   0.0   0.0   0.0   0.0   0.0   0.0   0.0
       6  *   0.0   0.0   0.0   0.0   0.0   0.0   0.0   0.0   0.0   0.0
0.0   0.0   0.0   0.0   0.0   0.0   0.0   0.0   0.0   0.0
       7  *   0.0   0.1   0.0   0.0   0.0   0.1   0.0   0.0   0.0   0.0
0.0   0.0   0.0   0.1   0.0   0.0   0.0   0.0   0.0   0.0
       8  *   0.0   0.0   0.1   0.0   0.0   0.0   0.0   0.0   0.1   0.0
0.0   0.0   0.0   0.0   0.0   0.0   0.1   0.0   0.0   0.0
       9  *   0.0   0.0   0.0   0.0   0.0   0.0   0.0   0.0   0.0   0.0
0.0   0.0   0.0   0.0   0.0   0.0   0.0   0.0   0.0   0.0
      10  *   0.1   0.0   0.0   0.1   0.0   0.0   0.0   0.0   0.0   0.1
0.0   0.0   0.0   0.0   0.0   0.0   0.0   0.1   0.0   0.0
      11  *   0.0   0.0   0.0   0.0   0.1   0.0   0.0   0.0   0.0   0.0
0.0   0.0   0.1   0.0   0.0   0.0   0.0   0.0   0.0   0.0
      12  *   0.0   0.0   0.0   0.0   0.0   0.0   0.0   0.0   0.0   0.0
0.0   0.0   0.0   0.0   0.0   0.0   0.0   0.0   0.0   0.0
      13  *   0.0   0.0   0.0   0.0   0.0   0.0   0.0   0.0   0.0   0.0
0.0   0.0   0.0   0.0   0.0   0.0   0.0   0.0   0.0   0.0
      14  *   0.0   0.0   0.0   0.0   0.0   0.0   0.0   0.0   0.0   0.0
0.0   0.0   0.0   0.0   0.0   0.0   0.0   0.0   0.0   0.0
      15  *   0.0   0.0   0.0   0.0   0.0   0.0   0.0   0.0   0.0   0.0
0.0   0.0   0.0   0.0   0.0   0.0   0.0   0.0   0.0   0.0
```

```
      16  *   0.0   0.0   0.0   0.0   0.0   0.0   0.0   0.0   0.0   0.0
0.0   0.0   0.0   0.0   0.0   0.0   0.0   0.0   0.0   0.0
      17  *   0.0   0.0   0.0   0.0   0.0   0.0   0.0   0.0   0.0   0.0
0.0   0.0   0.0   0.0   0.0   0.0   0.0   0.0   0.0   0.0
      18  *   0.0   0.0   0.0   0.0   0.0   0.0   0.0   0.0   0.0   0.0
0.0   0.0   0.0   0.0   0.0   0.0   0.0   0.0   0.0   0.0
      19  *   0.0   0.0   0.0   0.0   0.0   0.0   0.0   0.0   0.0   0.0
0.0   0.0   0.0   0.0   0.0   0.0   0.0   0.0   0.0   0.0
      20  *   0.0   0.1   0.0   0.0   0.0   0.0   0.0   0.0   0.0   0.0
0.0   0.0   0.0   0.0   0.0   0.0   0.0   0.0   0.0   0.0
      21  *   0.0   0.0   0.0   0.0   0.0   0.0   0.0   0.0   0.0   0.0
0.0   0.0   0.0   0.0   0.0   0.0   0.0   0.0   0.0   0.0
      22  *   0.0   0.0   0.0   0.0   0.0   0.0   0.0   0.0   0.0   0.0
0.0   0.0   0.0   0.0   0.0   0.0   0.0   0.0   0.0   0.0
      23  *   0.0   0.0   0.0   0.0   0.0   0.0   0.0   0.0   0.0   0.0
0.0   0.0   0.0   0.0   0.0   0.0   0.0   0.0   0.0   0.0
      24  *   0.0   0.0   0.0   0.0   0.0   0.0   0.0   0.0   0.0   0.0
0.0   0.0   0.0   0.0   0.0   0.0   0.0   0.0   0.0   0.0

 RUN ENDED ON 01/01/05 AT 18:38
```

Coors-Dennis Chavez/Rio Bravo Intersection: Santolina Scenario

Lane Group	EBL	EBT	EBR	WBL	WBT	WBR	NBL	NBT	NBR	SBL	SBT	SBR
Lane Configurations												
Traffic Volume (vph)	526	959	484	503	488	546	264	1162	380	585	1579	406
Future Volume (vph)	526	959	484	503	488	546	264	1162	380	585	1579	406
Ideal Flow (vphpl)	1900	1900	1900	1900	1900	1900	1900	1900	1900	1900	1900	1900
Storage Length (ft)	500		0	500		300	500		300	500		0
Storage Lanes	3		1	3		1	2		1	2		1
Taper Length (ft)	25			25			25			25		
Lane Util. Factor	0.94	0.95	1.00	0.94	0.95	1.00	0.97	0.91	1.00	0.97	0.91	1.00
Frt			0.850			0.850			0.850			0.850
Flt Protected	0.950			0.950			0.950			0.950		
Satd. Flow (prot)	4990	3539	1583	4990	3539	1583	3433	5085	1583	3433	5085	1583
Flt Permitted	0.950			0.950			0.950			0.950		
Satd. Flow (perm)	4990	3539	1583	4990	3539	1583	3433	5085	1583	3433	5085	1583
Right Turn on Red			Yes			Yes			Yes			Yes
Satd. Flow (RTOR)			95			95			136			55
Link Speed (mph)		45			45			45			45	
Link Distance (ft)		5380			10031			5580			3639	
Travel Time (s)		81.5			152.0			84.5			55.1	
Peak Hour Factor	0.92	0.92	0.92	0.92	0.92	0.92	0.92	0.92	0.92	0.92	0.92	0.92
Adj. Flow (vph)	572	1042	526	547	530	593	287	1263	413	636	1716	441
Shared Lane Traffic (%)												
Lane Group Flow (vph)	572	1042	526	547	530	593	287	1263	413	636	1716	441
Enter Blocked Intersection	No	No	No	No	No	No	No	No	No	No	No	No
Lane Alignment	Left	Left	Right	Left	Left	Right	Left	Left	Right	Left	Left	Right
Median Width(ft)		36			36			24			24	
Link Offset(ft)		0			0			0			0	
Crosswalk Width(ft)		16			16			16			16	
Two way Left Turn Lane												
Headway Factor	1.00	1.00	1.00	1.00	1.00	1.00	1.00	1.00	1.00	1.00	1.00	1.00
Turning Speed (mph)	15		9	15		9	15		9	15		9
Number of Detectors	1	2	1	1	2	1	1	2	1	1	2	1
Detector Template	Left	Thru	Right	Left	Thru	Right	Left	Thru	Right	Left	Thru	Right
Leading Detector (ft)	20	100	20	20	100	20	20	100	20	20	100	20
Trailing Detector (ft)	0	0	0	0	0	0	0	0	0	0	0	0
Detector 1 Position(ft)	0	0	0	0	0	0	0	0	0	0	0	0
Detector 1 Size(ft)	20	6	20	20	6	20	20	6	20	20	6	20
Detector 1 Type	Cl+Ex	Cl+Ex	Cl+Ex	Cl+Ex	Cl+Ex	Cl+Ex	Cl+Ex	Cl+Ex	Cl+Ex	Cl+Ex	Cl+Ex	Cl+Ex
Detector 1 Channel												
Detector 1 Extend (s)	0.0	0.0	0.0	0.0	0.0	0.0	0.0	0.0	0.0	0.0	0.0	0.0
Detector 1 Queue (s)	0.0	0.0	0.0	0.0	0.0	0.0	0.0	0.0	0.0	0.0	0.0	0.0
Detector 1 Delay (s)	0.0	0.0	0.0	0.0	0.0	0.0	0.0	0.0	0.0	0.0	0.0	0.0
Detector 2 Position(ft)		94			94			94			94	
Detector 2 Size(ft)		6			6			6			6	
Detector 2 Type		Cl+Ex			Cl+Ex			Cl+Ex			Cl+Ex	
Detector 2 Channel												
Detector 2 Extend (s)		0.0			0.0			0.0			0.0	
Turn Type	Prot	NA	pm+ov	Prot	NA	pm+ov	Prot	NA	pm+ov	Prot	NA	pm+ov
Protected Phases	7	4	5	3	8	1	5	2	3	1	6	7
Permitted Phases			4			8			2			6

Lane Group	EBL	EBT	EBR	WBL	WBT	WBR	NBL	NBT	NBR	SBL	SBT	SBR
Detector Phase	7	4	5	3	8	1	5	2	3	1	6	7
Switch Phase												
Minimum Initial (s)	5.0	5.0	5.0	5.0	5.0	5.0	5.0	5.0	5.0	5.0	5.0	5.0
Minimum Split (s)	9.5	22.5	9.5	9.5	22.5	9.5	9.5	22.5	9.5	9.5	22.5	9.5
Total Split (s)	24.4	39.0	15.6	18.0	32.6	26.6	15.6	36.4	18.0	26.6	47.4	24.4
Total Split (%)	20.3%	32.5%	13.0%	15.0%	27.2%	22.2%	13.0%	30.3%	15.0%	22.2%	39.5%	20.3%
Maximum Green (s)	19.9	34.5	11.1	13.5	28.1	22.1	11.1	31.9	13.5	22.1	42.9	19.9
Yellow Time (s)	3.5	3.5	3.5	3.5	3.5	3.5	3.5	3.5	3.5	3.5	3.5	3.5
All-Red Time (s)	1.0	1.0	1.0	1.0	1.0	1.0	1.0	1.0	1.0	1.0	1.0	1.0
Lost Time Adjust (s)	0.0	0.0	0.0	0.0	0.0	0.0	0.0	0.0	0.0	0.0	0.0	0.0
Total Lost Time (s)	4.5	4.5	4.5	4.5	4.5	4.5	4.5	4.5	4.5	4.5	4.5	4.5
Lead/Lag	Lead	Lag	Lead	Lead	Lag	Lead	Lead	Lag	Lead	Lead	Lag	Lead
Lead-Lag Optimize?	Yes	Yes	Yes	Yes	Yes	Yes	Yes	Yes	Yes	Yes	Yes	Yes
Vehicle Extension (s)	3.0	3.0	3.0	3.0	3.0	3.0	3.0	3.0	3.0	3.0	3.0	3.0
Recall Mode	None	None	None	None	None	None	None	C-Max	None	None	C-Max	None
Walk Time (s)		7.0			7.0			7.0			7.0	
Flash Dont Walk (s)		11.0			11.0			11.0			11.0	
Pedestrian Calls (#/hr)		0			0			0			0	
Act Effct Green (s)	18.6	34.5	50.1	13.5	29.4	56.0	11.1	31.9	49.9	22.1	42.9	66.0
Actuated g/C Ratio	0.16	0.29	0.42	0.11	0.24	0.47	0.09	0.27	0.42	0.18	0.36	0.55
v/c Ratio	0.74	1.02	0.73	0.98	0.61	0.75	0.91	0.93	0.56	1.01	0.94	0.49
Control Delay	54.7	76.9	31.0	85.6	44.1	29.3	85.5	56.5	20.7	86.3	49.2	16.3
Queue Delay	0.0	0.0	0.0	0.0	0.0	0.0	0.0	0.0	0.0	0.0	0.0	0.0
Total Delay	54.7	76.9	31.0	85.6	44.1	29.3	85.5	56.5	20.7	86.3	49.2	16.3
LOS	D	E	C	F	D	C	F	E	C	F	D	B
Approach Delay		59.7			52.4			53.2			52.5	
Approach LOS		E			D			D			D	

Intersection Summary	
Area Type:	Other
Cycle Length: 120	
Actuated Cycle Length: 120	
Offset: 0 (0%), Referenced to phase 2:NBT and 6:SBT, Start of Green	
Natural Cycle: 100	
Control Type: Actuated-Coordinated	
Maximum v/c Ratio: 1.02	
Intersection Signal Delay: 54.4	Intersection LOS: D
Intersection Capacity Utilization 90.2%	ICU Level of Service E
Analysis Period (min) 15	

Splits and Phases: 17: Coors & Dennis Chavez/Rio Bravo

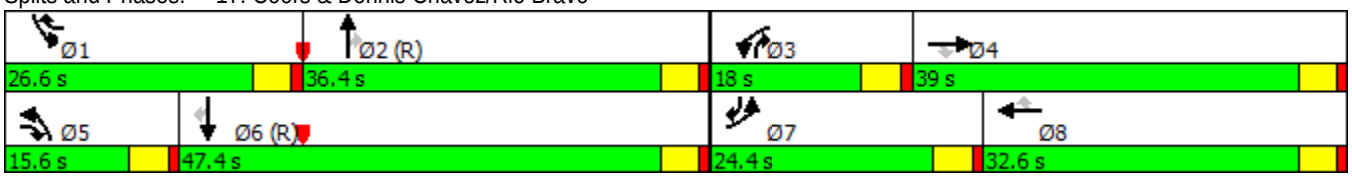

2040 PM Build

Coors and DennisC/RioB

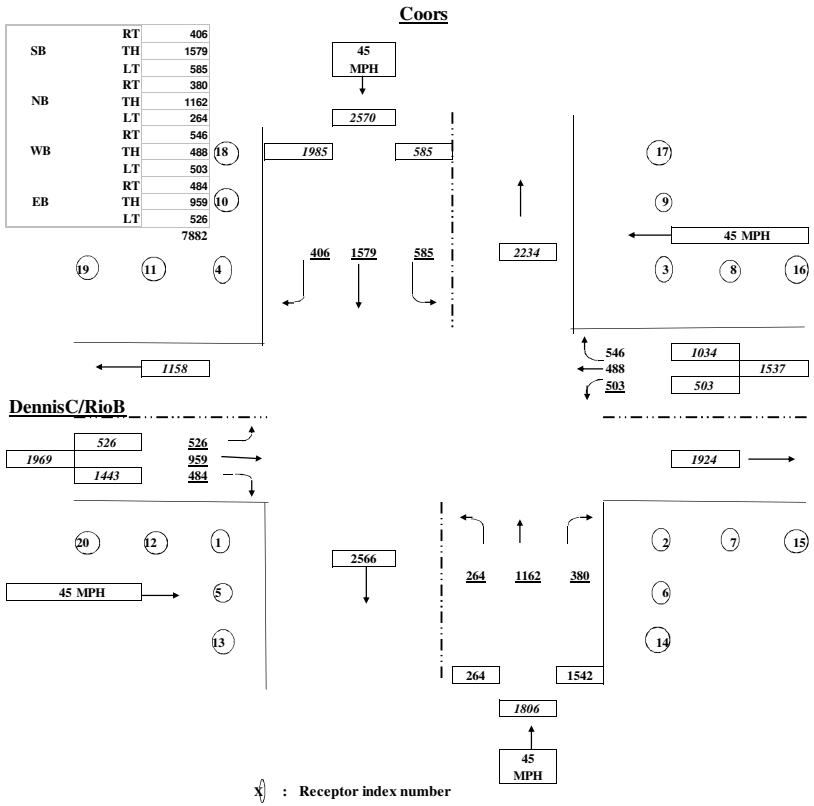

X : Receptor index number

: Approaching speed

F:\Santolina\1 Coors-DennisChavez\[16.xls]A

INTERSECTION CONFIGURATION , SIGNAL SETTING, AND EMISSION FACTOR

	EBL	EBT	EBR	WBL	WBT	WBR	NBL	NBT	NBR	SBL	SBT	SBR
LeftTurn Code*	1			1			1			1		
No. of Lanes	3	2	1	3	2	1	2	3	1	2	3	1
Lane Width (ft)	12	12	12	12	12	12	12	12	12	12	12	12
Median (ft)		4			4			4			4	
Offset Receptors and Lanes		0			0			0			0	
Cycle Length (sec)	120	120	120	120	120	120	120	120	120	120	120	120
1st Permitted Phase (inc yellow)	3.5	3.5	3.5	3.5	3.5	3.5	3.5	3.5	3.5	3.5	3.5	3.5
2nd Permitted Phase (inc yellow)	19.9	34.5	11.1	13.5	28.1	22.1	11.1	31.9	13.5	22.1	42.9	19.9
3rd Permitted Phase (inc yellow)												
Red Time (sec)	97	82	105	103	88	94	105	85	103	94	74	97
Lost Time (Incld'd. above)	0	0	0	0	0	0	0	0	0	0	0	0
Saturation Flow Rate (vphpl)	1900	1900	1900	1900	1900	1900	1900	1900	1900	1900	1900	1900
Speed (mph)		45			45			45			45	

* Left Turn Code : 1 - Exclusive left 2 - Left shared with through (IF 2 WBL should not be counted as a lane i.e. all LT lanes should be tallied under through)

Quee Links 800
Freeflow Links 1000

CALCULATION OF RECEPTOR'S COORDINATES

	COORDINATES			
RECEPTOR	X	Y	X	Y
#1			-66	-72
#2			78	-60
#3			66	72
#4			-78	60
#5			-66	-152
#6			78	-140
#7			158	-60
#8			146	72
#9			66	152
#10			-78	140
#11			-158	60
#12			-146	-72
#13			-66	-272
#14			78	-260
#15			278	-60
#16			266	72
#17			66	272
#18			-78	260
#19			-278	60
#20			-266	-72

Number of Links 24

CALCULATION OF LINK COORDINATES (w/ widths and lanes)

LINK	X1	Y1	X2	Y2	Width	Lanes
EB Approach	-1000	-32	0	-32	56	3
EB Departure	0	-32	1000	-32	44	2
EB Left	-1000	-2	0	-2	56	3
WB Approach	1000	32	0	32	56	3
WB Departure	0	32	-1000	32	44	2
WB Left	1000	2	0	2	56	3
NB Approach	32	-1000	32	0	68	4
NB Departure	32	0	32	1000	56	3
NB Left	2	-1000	2	0	44	2
SB Approach	-32	1000	-32	0	68	4
SB Departure	-32	0	-32	-1000	56	3
SB Left	-2	1000	-2	0	44	2
EB Left Queue	-56	-2	-856	-2	36	3
EB Through Queue	-56	-32	-856	-32	24	2
EB Right Queue	-56	-50	-856	-50	12	1
WB Left Queue	56	2	856	2	36	3
WB Through Queu	56	32	856	32	24	2
WB Right Queue	56	50	856	50	12	1
NB Left Queue	2	-50	2	-850	24	2
NB Through Queue	32	-50	32	-850	36	3
NB Right Queue	56	-50	56	-850	12	1
SB Left Queue	-2	50	-2	850	24	2
SB Through Queue	-32	50	-32	850	36	3
SB Right Queue	-56	50	-56	850	12	1

```
1                    CAL3QHC (93157)
                     IBM-PC VERSION (2.01)


                     RUN NAME: 16.DAT

                     RUN BEGIN ON 01/01/05 AT 18:38

                     CAL3QHC: LINE SOURCE DISPERSION MODEL - VERSION 2.0,
JANUARY 1992

      JOB: Santolina                                            RUN: 1-6
Coors and DennisC/RioB Build

       SITE & METEOROLOGICAL VARIABLES
       -------------------------------
       VS =   0.0 CM/S       VD =   0.0 CM/S       Z0 = 175. CM
        U =  1.0 M/S         CLAS =   4  (D)     ATIM =  60. MINUTES
MIXH =  1000. M   AMB =  3.0 PPM

       LINK VARIABLES
       --------------
         LINK DESCRIPTION     *         LINK COORDINATES (FT)          *
LENGTH  BRG TYPE   VPH    EF      H   W    V/C QUEUE
                              *   X1        Y1        X2        Y2     *
(FT)  (DEG)            (G/MI)  (FT) (FT)       (VEH)
      ------------------------*----------------------------------------*-
-------------------------------------------------------------
       1. EB A                *  -1000.0     -32.0       0.0     -32.0 *
1000.    90. AG   1443.   0.9   0.0 56.0
       2. EB D                *      0.0     -32.0    1000.0     -32.0 *
1000.    90. AG   1924.   0.9   0.0 44.0
       3. EB L                *  -1000.0      -2.0       0.0      -2.0 *
1000.    90. AG    526.   0.9   0.0 44.0
       4. WB A                *   1000.0      32.0       0.0      32.0 *
1000.   270. AG   1034.   0.9   0.0 56.0
       5. WB D                *      0.0      32.0   -1000.0      32.0 *
1000.   270. AG   1158.   0.9   0.0 44.0
       6. WB L                *   1000.0       2.0       0.0       2.0 *
1000.   270. AG    503.   0.9   0.0 44.0
       7. NB A                *     32.0   -1000.0      32.0       0.0 *
1000.   360. AG   1542.   0.9   0.0 68.0
       8. NB D                *     32.0       0.0      32.0    1000.0 *
1000.   360. AG   2234.   0.9   0.0 56.0
       9. NB L                *      2.0   -1000.0       2.0       0.0 *
1000.   360. AG    264.   0.9   0.0 44.0
      10. SB A                *    -32.0    1000.0     -32.0       0.0 *
1000.   180. AG   1985.   0.9   0.0 68.0
      11. SB D                *    -32.0       0.0     -32.0   -1000.0 *
1000.   180. AG   2566.   0.9   0.0 56.0
      12. SB L                *     -2.0    1000.0      -2.0       0.0 *
1000.   180. AG    585.   0.9   0.0 44.0
      13. EB L Q              *    -56.0      -2.0    -148.8      -2.0 *
93.   270. AG     27. 100.0   0.0 24.0 0.62   4.7
```

```
      14. EB T Q              *    -56.0     -32.0    -317.4     -32.0 *
261.   270. AG     15. 100.0   0.0 24.0 0.92  13.3
      15. EB R Q              *    -56.0     -50.0   -3730.3     -50.5 *
3674.   270. AG     10. 100.0   0.0 12.0 3.06 186.7
      16. WB L Q              *     56.0       2.0     177.6       2.0 *
122.    90. AG     29. 100.0   0.0 24.0 0.88   6.2
      17. WB T Q              *     56.0      32.0     173.4      32.0 *
117.    90. AG     17. 100.0   0.0 24.0 0.57   6.0
      18. WB R  Q             *     56.0      50.0    2588.7      50.3 *
2533.    90. AG      9. 100.0   0.0 12.0 1.64 128.7
      19. NB L  Q             *      2.0     -50.0       2.0    -143.7 *
94.   180. AG     20. 100.0   0.0 24.0 0.84   4.8
      20. NB T  Q             *     32.0     -50.0      32.0    -276.3 *
226.   180. AG     25. 100.0   0.0 36.0 0.91  11.5
      21. NB R  Q             *     56.0     -50.0      56.0   -2278.6 *
2229.   180. AG     10. 100.0   0.0 12.0 2.01 113.2
      22. SB L  Q             *     -2.0      50.0      -2.0     229.6 *
180.   360. AG     18. 100.0   0.0 24.0 0.88   9.1
      23. SB T  Q             *    -32.0      50.0     -32.0     270.4 *
220.   360. AG     21. 100.0   0.0 36.0 0.81  11.2
      24. SB R  Q             *    -56.0      50.0     -56.0    1583.3 *
1533.   360. AG      9. 100.0   0.0 12.0 1.43  77.9
1

PAGE  2
      JOB: Santolina                                          RUN: 1-6
Coors and DennisC/RioB Build
       ADDITIONAL QUEUE LINK PARAMETERS
       --------------------------------
         LINK DESCRIPTION     *    CYCLE    RED     CLEARANCE  APPROACH
SATURATION   IDLE   SIGNAL   ARRIVAL
                              *    LENGTH   TIME    LOST TIME    VOL
FLOW RATE   EM FAC   TYPE     RATE
                              *     (SEC)   (SEC)    (SEC)      (VPH)
(VPH)    (gm/hr)
      -------------------------*-----------------------------------------
-------------------------------------
      13. EB L Q              *     120       97       3.0       526
1900       4.20      3        3
      14. EB T Q              *     120       82       3.0       959
1900       4.20      3        3
      15. EB R Q              *     120      105       3.0       484
1900       4.20      3        3
      16. WB L Q              *     120      103       3.0       503
1900       4.20      3        3
      17. WB T Q              *     120       88       3.0       488
1900       4.20      3        3
      18. WB R  Q             *     120       94       3.0       546
1900       4.20      3        3
      19. NB L  Q             *     120      105       3.0       264
1900       4.20      3        3
      20. NB T  Q             *     120       88       3.0      1162
1900       4.20      3        3
```

```
      21. NB R  Q             *     120      103       3.0       380
1900       4.20      3        3
      22. SB L  Q             *     120       94       3.0       585
1900       4.20      3        3
      23. SB T  Q             *     120       74       3.0      1579
1900       4.20      3        3
      24. SB R  Q             *     120       97       3.0       406
1900       4.20      3        3
```

RECEPTOR LOCATIONS

RECEPTOR	COORDINATES (FT) X	Y	Z
1. 1	-66.0	-72.0	5.0
2. 2	78.0	-60.0	5.0
3. 3	66.0	72.0	5.0
4. 4	-78.0	60.0	5.0
5. 5	-66.0	-152.0	5.0
6. 6	78.0	-140.0	5.0
7. 7	158.0	-60.0	5.0
8. 8	146.0	72.0	5.0
9. 9	66.0	152.0	5.0
10. 10	-78.0	140.0	5.0
11. 11	-158.0	60.0	5.0
12. 12	-146.0	-72.0	5.0
13. 13	-66.0	-272.0	5.0
14. 14	78.0	-260.0	5.0
15. 15	278.0	-60.0	5.0
16. 16	266.0	72.0	5.0
17. 17	66.0	272.0	5.0
18. 18	-78.0	260.0	5.0
19. 19	-278.0	60.0	5.0
20. 20	-266.0	-72.0	5.0

1

JOB: Santolina RUN: 1-6
Coors and DennisC/RioB Build

MODEL RESULTS

REMARKS : In search of the angle corresponding to the maximum concentration, only the first angle, of the angles with same maximum concentrations, is indicated as maximum.

WIND ANGLE RANGE: 0.-360.

```
 WIND  * CONCENTRATION
 ANGLE *      (PPM)
 (DEGR)* REC1  REC2  REC3  REC4  REC5  REC6  REC7  REC8  REC9  REC10
REC11 REC12 REC13 REC14 REC15 REC16 REC17 REC18 REC19 REC20
```

```
 ------*-------------------------------------------------------------------
-------------------------------------------------------------
   0.  *   3.1   3.1   3.1   3.1   3.0   3.0   3.1   3.0   3.1   3.0
3.0   3.0   3.1   3.0   3.1   3.0   3.1   3.0   3.0   3.0
   5.  *   3.1   3.1   3.1   3.1   3.1   3.0   3.1   3.0   3.1   3.1
3.0   3.0   3.1   3.0   3.1   3.0   3.1   3.1   3.0   3.0
  10.  *   3.1   3.1   3.0   3.1   3.1   3.0   3.1   3.0   3.0   3.1
3.0   3.0   3.1   3.0   3.1   3.0   3.0   3.1   3.0   3.0
  15.  *   3.1   3.1   3.0   3.1   3.1   3.0   3.1   3.0   3.0   3.1
3.0   3.0   3.1   3.0   3.1   3.0   3.0   3.1   3.0   3.0
  20.  *   3.1   3.1   3.0   3.1   3.1   3.0   3.1   3.0   3.0   3.1
3.0   3.0   3.1   3.0   3.1   3.0   3.0   3.1   3.0   3.0
  25.  *   3.1   3.1   3.0   3.2   3.1   3.0   3.1   3.0   3.0   3.1
3.0   3.0   3.1   3.0   3.1   3.0   3.0   3.1   3.0   3.0
  30.  *   3.1   3.1   3.0   3.2   3.1   3.0   3.1   3.0   3.0   3.1
3.0   3.0   3.1   3.0   3.1   3.0   3.0   3.1   3.0   3.0
  35.  *   3.1   3.1   3.0   3.2   3.1   3.0   3.1   3.0   3.0   3.1
3.0   3.0   3.1   3.0   3.1   3.0   3.0   3.1   3.0   3.0
  40.  *   3.1   3.1   3.0   3.2   3.1   3.0   3.1   3.0   3.0   3.1
3.0   3.0   3.1   3.0   3.1   3.0   3.0   3.1   3.0   3.0
  45.  *   3.1   3.1   3.0   3.2   3.1   3.0   3.1   3.0   3.0   3.1
3.0   3.0   3.1   3.0   3.1   3.0   3.0   3.1   3.0   3.0
  50.  *   3.1   3.1   3.0   3.1   3.1   3.0   3.1   3.0   3.0   3.1
3.0   3.0   3.1   3.0   3.1   3.0   3.0   3.1   3.0   3.0
  55.  *   3.1   3.1   3.0   3.1   3.1   3.0   3.1   3.0   3.0   3.1
3.0   3.0   3.1   3.0   3.1   3.0   3.0   3.1   3.0   3.0
  60.  *   3.1   3.1   3.0   3.1   3.1   3.0   3.1   3.0   3.0   3.1
3.0   3.0   3.1   3.0   3.1   3.0   3.0   3.1   3.0   3.0
  65.  *   3.1   3.1   3.0   3.0   3.1   3.0   3.1   3.0   3.0   3.0
3.0   3.0   3.1   3.0   3.1   3.0   3.0   3.0   3.0   3.0
  70.  *   3.1   3.1   3.0   3.0   3.1   3.0   3.1   3.0   3.0   3.0
3.0   3.0   3.1   3.0   3.1   3.0   3.0   3.0   3.0   3.0
  75.  *   3.2   3.1   3.0   3.0   3.1   3.0   3.1   3.0   3.0   3.0
3.0   3.0   3.1   3.0   3.1   3.0   3.0   3.0   3.0   3.0
  80.  *   3.2   3.1   3.0   3.0   3.1   3.0   3.1   3.0   3.0   3.0
3.0   3.0   3.1   3.0   3.1   3.0   3.0   3.0   3.0   3.0
  85.  *   3.2   3.1   3.0   3.0   3.1   3.0   3.1   3.0   3.0   3.0
3.0   3.0   3.1   3.0   3.1   3.0   3.0   3.0   3.0   3.0
  90.  *   3.1   3.1   3.0   3.1   3.1   3.0   3.1   3.0   3.0   3.1
3.0   3.0   3.1   3.0   3.1   3.0   3.0   3.1   3.0   3.0
  95.  *   3.1   3.1   3.0   3.0   3.1   3.0   3.1   3.0   3.0   3.0
3.0   3.0   3.1   3.0   3.0   3.0   3.0   3.0   3.0   3.0
 100.  *   3.1   3.0   3.0   3.0   3.1   3.0   3.0   3.0   3.0   3.0
3.0   3.0   3.1   3.0   3.0   3.0   3.0   3.0   3.0   3.0
 105.  *   3.1   3.0   3.0   3.0   3.1   3.0   3.0   3.0   3.0   3.0
3.0   3.0   3.1   3.0   3.0   3.0   3.0   3.0   3.0   3.0
 110.  *   3.1   3.0   3.0   3.0   3.1   3.0   3.0   3.0   3.0   3.0
3.0   3.0   3.1   3.0   3.0   3.0   3.0   3.0   3.0   3.0
 115.  *   3.1   3.0   3.0   3.0   3.1   3.0   3.0   3.0   3.0   3.0
3.0   3.0   3.1   3.0   3.0   3.0   3.0   3.0   3.0   3.0
 120.  *   3.1   3.0   3.0   3.0   3.1   3.0   3.0   3.0   3.0   3.0
3.0   3.0   3.1   3.0   3.0   3.0   3.0   3.1   3.0   3.0
 125.  *   3.1   3.0   3.0   3.0   3.1   3.0   3.0   3.0   3.0   3.1
3.0   3.0   3.1   3.0   3.0   3.0   3.0   3.1   3.0   3.0
```

```
 130.  *   3.1   3.0   3.0   3.0   3.1   3.0   3.0   3.0   3.0   3.1
3.0   3.0   3.1   3.0   3.0   3.0   3.0   3.1   3.0   3.0
 135.  *   3.1   3.0   3.0   3.0   3.1   3.0   3.0   3.0   3.0   3.1
3.0   3.0   3.1   3.0   3.0   3.0   3.0   3.2   3.0   3.0
 140.  *   3.1   3.0   3.0   3.0   3.1   3.0   3.0   3.0   3.0   3.1
3.0   3.0   3.1   3.0   3.0   3.0   3.0   3.2   3.0   3.0
 145.  *   3.1   3.0   3.0   3.0   3.1   3.0   3.0   3.0   3.0   3.1
3.0   3.0   3.1   3.0   3.0   3.0   3.0   3.2   3.0   3.0
 150.  *   3.1   3.0   3.0   3.0   3.1   3.0   3.0   3.0   3.0   3.1
3.0   3.0   3.1   3.0   3.0   3.0   3.0   3.2   3.0   3.0
 155.  *   3.1   3.0   3.0   3.1   3.1   3.0   3.0   3.0   3.0   3.1
3.0   3.0   3.1   3.0   3.0   3.0   3.0   3.2   3.0   3.0
 160.  *   3.1   3.0   3.0   3.1   3.1   3.0   3.0   3.0   3.0   3.0
3.0   3.0   3.1   3.0   3.0   3.0   3.0   3.1   3.0   3.0
 165.  *   3.1   3.0   3.0   3.1   3.1   3.0   3.0   3.0   3.0   3.0
3.0   3.0   3.1   3.0   3.0   3.0   3.0   3.1   3.0   3.0
 170.  *   3.1   3.0   3.0   3.1   3.1   3.0   3.0   3.0   3.0   3.1
3.0   3.0   3.1   3.0   3.0   3.0   3.0   3.1   3.0   3.0
 175.  *   3.1   3.0   3.0   3.1   3.1   3.0   3.0   3.0   3.0   3.0
3.0   3.0   3.1   3.0   3.0   3.0   3.0   3.0   3.0   3.0
 180.  *   3.1   3.0   3.0   3.1   3.1   3.0   3.0   3.0   3.0   3.0
3.0   3.0   3.1   3.0   3.0   3.0   3.1   3.0   3.0   3.0
 185.  *   3.1   3.0   3.0   3.0   3.1   3.0   3.0   3.0   3.1   3.0
3.0   3.0   3.1   3.0   3.0   3.0   3.1   3.0   3.0   3.0
 190.  *   3.0   3.1   3.0   3.0   3.0   3.1   3.0   3.0   3.1   3.0
3.0   3.0   3.0   3.1   3.0   3.0   3.1   3.0   3.0   3.0
 195.  *   3.0   3.1   3.0   3.0   3.0   3.1   3.0   3.0   3.1   3.0
3.0   3.0   3.0   3.1   3.0   3.0   3.1   3.0   3.0   3.0
 200.  *   3.0   3.2   3.0   3.0   3.0   3.1   3.0   3.0   3.1   3.0
3.0   3.0   3.0   3.1   3.0   3.0   3.1   3.0   3.0   3.0
 205.  *   3.0   3.2   3.1   3.0   3.0   3.1   3.0   3.0   3.1   3.0
3.0   3.0   3.0   3.1   3.0   3.0   3.1   3.0   3.0   3.0
1
```



```
      JOB: Santolina                                          RUN: 1-6
Coors and DennisC/RioB Build

 WIND  * CONCENTRATION
 ANGLE *      (PPM)
 (DEGR)* REC1  REC2  REC3  REC4  REC5  REC6  REC7  REC8  REC9  REC10
REC11 REC12 REC13 REC14 REC15 REC16 REC17 REC18 REC19 REC20
 ------*-------------------------------------------------------------------
-------------------------------------------------------
 210.  *   3.0   3.2   3.1   3.0   3.0   3.2   3.0   3.0   3.1   3.0
3.0   3.0   3.0   3.1   3.0   3.0   3.1   3.0   3.0   3.0
 215.  *   3.0   3.1   3.1   3.0   3.0   3.1   3.0   3.0   3.1   3.0
3.0   3.0   3.0   3.0   3.0   3.0   3.1   3.0   3.0   3.0
 220.  *   3.0   3.1   3.1   3.0   3.0   3.1   3.0   3.0   3.1   3.0
3.0   3.0   3.0   3.0   3.0   3.0   3.1   3.0   3.0   3.0
 225.  *   3.0   3.1   3.1   3.0   3.0   3.1   3.0   3.0   3.1   3.0
3.0   3.0   3.0   3.0   3.0   3.0   3.1   3.0   3.0   3.0
 230.  *   3.0   3.1   3.1   3.0   3.0   3.1   3.0   3.0   3.1   3.0
3.0   3.0   3.0   3.0   3.0   3.0   3.1   3.0   3.0   3.0
```

```
 235.  *   3.0   3.1   3.1   3.0   3.0   3.1   3.0   3.0   3.1   3.0
3.0   3.0   3.0   3.0   3.0   3.0   3.1   3.0   3.0   3.0
 240.  *   3.0   3.1   3.1   3.0   3.0   3.1   3.0   3.0   3.1   3.0
3.0   3.0   3.0   3.0   3.0   3.0   3.1   3.0   3.0   3.0
 245.  *   3.0   3.1   3.1   3.0   3.0   3.1   3.0   3.0   3.1   3.0
3.0   3.0   3.0   3.0   3.0   3.0   3.1   3.0   3.0   3.0
 250.  *   3.0   3.1   3.1   3.1   3.0   3.1   3.0   3.0   3.1   3.0
3.1   3.0   3.0   3.0   3.0   3.0   3.1   3.0   3.1   3.0
 255.  *   3.0   3.1   3.1   3.1   3.0   3.1   3.0   3.0   3.1   3.0
3.1   3.0   3.0   3.0   3.0   3.0   3.1   3.0   3.1   3.0
 260.  *   3.0   3.0   3.1   3.1   3.0   3.1   3.0   3.0   3.1   3.0
3.1   3.0   3.0   3.0   3.0   3.0   3.1   3.0   3.1   3.0
 265.  *   3.0   3.0   3.1   3.1   3.0   3.1   3.0   3.0   3.1   3.0
3.0   3.0   3.0   3.0   3.0   3.0   3.1   3.0   3.0   3.0
 270.  *   3.0   3.0   3.1   3.0   3.0   3.1   3.0   3.0   3.1   3.0
3.0   3.0   3.0   3.0   3.1   3.0   3.1   3.0   3.0   3.0
 275.  *   3.0   3.0   3.1   3.0   3.0   3.1   3.1   3.0   3.1   3.0
3.0   3.0   3.0   3.1   3.1   3.0   3.1   3.0   3.0   3.0
 280.  *   3.1   3.0   3.1   3.0   3.0   3.1   3.1   3.0   3.1   3.0
3.0   3.1   3.0   3.1   3.1   3.0   3.1   3.0   3.0   3.1
 285.  *   3.1   3.0   3.1   3.0   3.0   3.1   3.1   3.0   3.1   3.0
3.0   3.1   3.0   3.1   3.1   3.0   3.1   3.0   3.0   3.1
 290.  *   3.1   3.1   3.1   3.0   3.0   3.1   3.1   3.0   3.1   3.0
3.0   3.1   3.0   3.1   3.1   3.0   3.1   3.0   3.0   3.1
 295.  *   3.1   3.1   3.1   3.0   3.0   3.1   3.1   3.0   3.1   3.0
3.0   3.1   3.0   3.1   3.1   3.0   3.1   3.0   3.0   3.1
 300.  *   3.0   3.1   3.1   3.0   3.0   3.1   3.1   3.0   3.1   3.0
3.0   3.0   3.0   3.1   3.1   3.0   3.1   3.0   3.0   3.0
 305.  *   3.0   3.1   3.1   3.0   3.0   3.1   3.1   3.0   3.1   3.0
3.0   3.0   3.0   3.1   3.1   3.0   3.1   3.0   3.0   3.0
 310.  *   3.0   3.1   3.1   3.0   3.0   3.1   3.1   3.0   3.1   3.0
3.0   3.0   3.0   3.1   3.1   3.0   3.1   3.0   3.0   3.0
 315.  *   3.0   3.1   3.1   3.0   3.0   3.1   3.1   3.0   3.1   3.0
3.0   3.0   3.0   3.1   3.1   3.0   3.1   3.0   3.0   3.0
 320.  *   3.0   3.1   3.1   3.0   3.0   3.1   3.1   3.0   3.1   3.0
3.0   3.0   3.0   3.1   3.1   3.0   3.1   3.0   3.0   3.0
 325.  *   3.0   3.1   3.1   3.0   3.0   3.0   3.1   3.0   3.1   3.0
3.0   3.0   3.0   3.1   3.1   3.0   3.1   3.0   3.0   3.0
 330.  *   3.0   3.1   3.1   3.0   3.0   3.0   3.1   3.0   3.1   3.0
3.0   3.0   3.0   3.1   3.1   3.0   3.1   3.0   3.0   3.0
 335.  *   3.0   3.1   3.1   3.0   3.0   3.0   3.1   3.0   3.1   3.0
3.0   3.0   3.0   3.1   3.1   3.0   3.1   3.0   3.0   3.0
 340.  *   3.0   3.2   3.1   3.0   3.0   3.0   3.1   3.0   3.1   3.0
3.0   3.0   3.0   3.1   3.1   3.0   3.1   3.0   3.0   3.0
 345.  *   3.0   3.2   3.1   3.0   3.0   3.0   3.1   3.0   3.1   3.0
3.0   3.0   3.0   3.0   3.1   3.0   3.1   3.0   3.0   3.0
 350.  *   3.0   3.2   3.1   3.0   3.0   3.0   3.1   3.0   3.1   3.0
3.0   3.0   3.0   3.0   3.1   3.0   3.1   3.0   3.0   3.0
 355.  *   3.0   3.2   3.1   3.0   3.0   3.0   3.1   3.0   3.1   3.0
3.0   3.0   3.0   3.0   3.1   3.0   3.1   3.0   3.0   3.0
 360.  *   3.1   3.1   3.1   3.1   3.0   3.0   3.1   3.0   3.1   3.0
3.0   3.0   3.1   3.0   3.1   3.0   3.1   3.0   3.0   3.0
 -------*-------------------------------------------------------------------
-------------------------------------------------------
```

```
 MAX   *   3.2   3.2   3.1   3.2   3.1   3.2   3.1   3.0   3.1   3.1
3.1   3.1   3.1   3.1   3.1   3.0   3.1   3.2   3.1   3.1
 DEGR. *   75   200     0    25     5   210     0     0     0     5   250
280     0   190     0     0     0   135   250   280

 THE HIGHEST CONCENTRATION IS    3.20 PPM AT   75 DEGREES FROM REC1 .
1
```


JOB: Santolina RUN: 1-6
Coors and DennisC/RioB Build

RECEPTOR - LINK MATRIX FOR THE ANGLE PRODUCING
THE MAXIMUM CONCENTRATION FOR EACH RECEPTOR

```
          *    CO/LINK  (PPM)
          *    ANGLE (DEGREES)
          *  REC1  REC2  REC3  REC4  REC5  REC6  REC7  REC8  REC9  REC10
REC11 REC12 REC13 REC14 REC15 REC16 REC17 REC18 REC19 REC20
   LINK # *    75   200     0    25     5   210     0     0     0     5
250   280     0   190     0     0     0   135   250   280
   -------*-------------------------------------------------------------
-------------------------------------------------------------
       1  *   0.0   0.0   0.0   0.0   0.0   0.0   0.0   0.0   0.0   0.0
0.0   0.1   0.0   0.0   0.0   0.0   0.0   0.0   0.0   0.1
       2  *   0.1   0.0   0.0   0.0   0.0   0.0   0.1   0.0   0.0   0.0
0.0   0.0   0.0   0.0   0.1   0.0   0.0   0.0   0.0   0.0
       3  *   0.0   0.0   0.0   0.0   0.0   0.0   0.0   0.0   0.0   0.0
0.0   0.0   0.0   0.0   0.0   0.0   0.0   0.0   0.0   0.0
       4  *   0.0   0.0   0.0   0.0   0.0   0.0   0.0   0.0   0.0   0.0
0.0   0.0   0.0   0.0   0.0   0.0   0.0   0.0   0.0   0.0
       5  *   0.0   0.0   0.0   0.0   0.0   0.0   0.0   0.0   0.0   0.0
0.1   0.0   0.0   0.0   0.0   0.0   0.0   0.0   0.1   0.0
       6  *   0.0   0.0   0.0   0.0   0.0   0.0   0.0   0.0   0.0   0.0
0.0   0.0   0.0   0.0   0.0   0.0   0.0   0.0   0.0   0.0
       7  *   0.0   0.1   0.0   0.0   0.0   0.1   0.0   0.0   0.0   0.0
0.0   0.0   0.0   0.1   0.0   0.0   0.0   0.0   0.0   0.0
       8  *   0.0   0.0   0.1   0.0   0.0   0.0   0.0   0.0   0.1   0.0
0.0   0.0   0.0   0.0   0.0   0.0   0.1   0.0   0.0   0.0
       9  *   0.0   0.0   0.0   0.0   0.0   0.0   0.0   0.0   0.0   0.0
0.0   0.0   0.0   0.0   0.0   0.0   0.0   0.0   0.0   0.0
      10  *   0.0   0.0   0.0   0.1   0.0   0.0   0.0   0.0   0.0   0.1
0.0   0.0   0.0   0.0   0.0   0.0   0.0   0.1   0.0   0.0
      11  *   0.1   0.0   0.0   0.0   0.1   0.0   0.0   0.0   0.0   0.0
0.0   0.0   0.1   0.0   0.0   0.0   0.0   0.0   0.0   0.0
      12  *   0.0   0.0   0.0   0.0   0.0   0.0   0.0   0.0   0.0   0.0
0.0   0.0   0.0   0.0   0.0   0.0   0.0   0.0   0.0   0.0
      13  *   0.0   0.0   0.0   0.0   0.0   0.0   0.0   0.0   0.0   0.0
0.0   0.0   0.0   0.0   0.0   0.0   0.0   0.0   0.0   0.0
      14  *   0.0   0.0   0.0   0.0   0.0   0.0   0.0   0.0   0.0   0.0
0.0   0.0   0.0   0.0   0.0   0.0   0.0   0.0   0.0   0.0
      15  *   0.0   0.0   0.0   0.0   0.0   0.0   0.0   0.0   0.0   0.0
0.0   0.0   0.0   0.0   0.0   0.0   0.0   0.0   0.0   0.0
```

```
      16  *   0.0   0.0   0.0   0.0   0.0   0.0   0.0   0.0   0.0   0.0
0.0   0.0   0.0   0.0   0.0   0.0   0.0   0.0   0.0   0.0
      17  *   0.0   0.0   0.0   0.0   0.0   0.0   0.0   0.0   0.0   0.0
0.0   0.0   0.0   0.0   0.0   0.0   0.0   0.0   0.0   0.0
      18  *   0.0   0.0   0.0   0.0   0.0   0.0   0.0   0.0   0.0   0.0
0.0   0.0   0.0   0.0   0.0   0.0   0.0   0.0   0.0   0.0
      19  *   0.0   0.0   0.0   0.0   0.0   0.0   0.0   0.0   0.0   0.0
0.0   0.0   0.0   0.0   0.0   0.0   0.0   0.0   0.0   0.0
      20  *   0.0   0.1   0.0   0.0   0.0   0.1   0.0   0.0   0.0   0.0
0.0   0.0   0.0   0.0   0.0   0.0   0.0   0.0   0.0   0.0
      21  *   0.0   0.0   0.0   0.0   0.0   0.0   0.0   0.0   0.0   0.0
0.0   0.0   0.0   0.0   0.0   0.0   0.0   0.0   0.0   0.0
      22  *   0.0   0.0   0.0   0.0   0.0   0.0   0.0   0.0   0.0   0.0
0.0   0.0   0.0   0.0   0.0   0.0   0.0   0.0   0.0   0.0
      23  *   0.0   0.0   0.0   0.1   0.0   0.0   0.0   0.0   0.0   0.0
0.0   0.0   0.0   0.0   0.0   0.0   0.0   0.1   0.0   0.0
      24  *   0.0   0.0   0.0   0.0   0.0   0.0   0.0   0.0   0.0   0.0
0.0   0.0   0.0   0.0   0.0   0.0   0.0   0.0   0.0   0.0

 RUN ENDED ON 01/01/05 AT 18:38
```

Broadway/Rio Bravo Intersection: MTP Scenario

Lane Group	EBL	EBT	EBR	WBL	WBT	WBR	NBL	NBT	NBR	SBL	SBT	SBR
Lane Configurations												
Traffic Volume (vph)	413	759	549	509	808	383	594	1111	490	573	1567	695
Future Volume (vph)	413	759	549	509	808	383	594	1111	490	573	1567	695
Ideal Flow (vphpl)	1900	1900	1900	1900	1900	1900	1900	1900	1900	1900	1900	1900
Storage Length (ft)	500		300	500		300	500		300	500		300
Storage Lanes	3		2	2		2	3		1	2		2
Taper Length (ft)	25			25			25			25		
Lane Util. Factor	0.94	0.91	0.88	0.97	0.91	0.88	0.94	0.91	1.00	0.97	0.91	0.88
Frt			0.850			0.850			0.850			0.850
Flt Protected	0.950			0.950			0.950			0.950		
Satd. Flow (prot)	4990	5085	2787	3433	5085	2787	4990	5085	1583	3433	5085	2787
Flt Permitted	0.950			0.950			0.950			0.950		
Satd. Flow (perm)	4990	5085	2787	3433	5085	2787	4990	5085	1583	3433	5085	2787
Right Turn on Red			Yes			Yes			Yes			Yes
Satd. Flow (RTOR)			164			65			115			115
Link Speed (mph)		45			45			45			45	
Link Distance (ft)		6653			1798			1894			1725	
Travel Time (s)		100.8			27.2			28.7			26.1	
Peak Hour Factor	0.92	0.92	0.92	0.92	0.92	0.92	0.92	0.92	0.92	0.92	0.92	0.92
Adj. Flow (vph)	449	825	597	553	878	416	646	1208	533	623	1703	755
Shared Lane Traffic (%)												
Lane Group Flow (vph)	449	825	597	553	878	416	646	1208	533	623	1703	755
Enter Blocked Intersection	No	No	No	No	No	No	No	No	No	No	No	No
Lane Alignment	Left	Left	Right	Left	Left	Right	Left	Left	Right	Left	Left	Right
Median Width(ft)		36			36			36			36	
Link Offset(ft)		0			0			0			0	
Crosswalk Width(ft)		16			16			16			16	
Two way Left Turn Lane												
Headway Factor	1.00	1.00	1.00	1.00	1.00	1.00	1.00	1.00	1.00	1.00	1.00	1.00
Turning Speed (mph)	15		9	15		9	15		9	15		9
Number of Detectors	1	2	1	1	2	1	1	2	1	1	2	1
Detector Template	Left	Thru	Right	Left	Thru	Right	Left	Thru	Right	Left	Thru	Right
Leading Detector (ft)	20	100	20	20	100	20	20	100	20	20	100	20
Trailing Detector (ft)	0	0	0	0	0	0	0	0	0	0	0	0
Detector 1 Position(ft)	0	0	0	0	0	0	0	0	0	0	0	0
Detector 1 Size(ft)	20	6	20	20	6	20	20	6	20	20	6	20
Detector 1 Type	Cl+Ex	Cl+Ex	Cl+Ex	Cl+Ex	Cl+Ex	Cl+Ex	Cl+Ex	Cl+Ex	Cl+Ex	Cl+Ex	Cl+Ex	Cl+Ex
Detector 1 Channel												
Detector 1 Extend (s)	0.0	0.0	0.0	0.0	0.0	0.0	0.0	0.0	0.0	0.0	0.0	0.0
Detector 1 Queue (s)	0.0	0.0	0.0	0.0	0.0	0.0	0.0	0.0	0.0	0.0	0.0	0.0
Detector 1 Delay (s)	0.0	0.0	0.0	0.0	0.0	0.0	0.0	0.0	0.0	0.0	0.0	0.0
Detector 2 Position(ft)		94			94			94			94	
Detector 2 Size(ft)		6			6			6			6	
Detector 2 Type		Cl+Ex			Cl+Ex			Cl+Ex			Cl+Ex	
Detector 2 Channel												
Detector 2 Extend (s)		0.0			0.0			0.0			0.0	
Turn Type	Prot	NA	pm+ov	Prot	NA	pm+ov	Prot	NA	pm+ov	Prot	NA	pm+ov
Protected Phases	7	4	5	3	8	1	5	2	3	1	6	7
Permitted Phases			4			8			2			6

Lane Group	EBL	EBT	EBR	WBL	WBT	WBR	NBL	NBT	NBR	SBL	SBT	SBR
Detector Phase	7	4	5	3	8	1	5	2	3	1	6	7
Switch Phase												
Minimum Initial (s)	5.0	5.0	5.0	5.0	5.0	5.0	5.0	5.0	5.0	5.0	5.0	5.0
Minimum Split (s)	9.5	22.5	9.5	9.5	22.5	9.5	9.5	22.5	9.5	9.5	22.5	9.5
Total Split (s)	16.2	22.5	17.8	21.0	27.3	23.6	17.8	32.9	21.0	23.6	38.7	16.2
Total Split (%)	16.2%	22.5%	17.8%	21.0%	27.3%	23.6%	17.8%	32.9%	21.0%	23.6%	38.7%	16.2%
Maximum Green (s)	11.7	18.0	13.3	16.5	22.8	19.1	13.3	28.4	16.5	19.1	34.2	11.7
Yellow Time (s)	3.5	3.5	3.5	3.5	3.5	3.5	3.5	3.5	3.5	3.5	3.5	3.5
All-Red Time (s)	1.0	1.0	1.0	1.0	1.0	1.0	1.0	1.0	1.0	1.0	1.0	1.0
Lost Time Adjust (s)	0.0	0.0	0.0	0.0	0.0	0.0	0.0	0.0	0.0	0.0	0.0	0.0
Total Lost Time (s)	4.5	4.5	4.5	4.5	4.5	4.5	4.5	4.5	4.5	4.5	4.5	4.5
Lead/Lag	Lead	Lag	Lead	Lead	Lag	Lead	Lead	Lag	Lead	Lead	Lag	Lead
Lead-Lag Optimize?	Yes	Yes	Yes	Yes	Yes	Yes	Yes	Yes	Yes	Yes	Yes	Yes
Vehicle Extension (s)	3.0	3.0	3.0	3.0	3.0	3.0	3.0	3.0	3.0	3.0	3.0	3.0
Recall Mode	None	None	None	None	None	None	None	C-Max	None	None	C-Max	None
Walk Time (s)		7.0			7.0			7.0			7.0	
Flash Dont Walk (s)		11.0			11.0			11.0			11.0	
Pedestrian Calls (#/hr)		0			0			0			0	
Act Effct Green (s)	11.7	18.0	35.8	16.5	22.8	46.4	13.3	28.4	49.4	19.1	34.2	50.4
Actuated g/C Ratio	0.12	0.18	0.36	0.16	0.23	0.46	0.13	0.28	0.49	0.19	0.34	0.50
v/c Ratio	0.77	0.90	0.54	0.98	0.76	0.31	0.97	0.84	0.63	0.95	0.98	0.52
Control Delay	71.8	36.6	5.0	75.2	40.9	14.7	73.3	39.9	18.3	66.0	50.4	15.3
Queue Delay	0.0	0.0	0.0	0.0	0.0	0.0	0.0	0.0	0.0	0.0	0.0	0.0
Total Delay	71.8	36.6	5.0	75.2	40.9	14.7	73.3	39.9	18.3	66.0	50.4	15.3
LOS	E	D	A	E	D	B	E	D	B	E	D	B
Approach Delay		35.0			45.3			44.1			44.9	
Approach LOS		C			D			D			D	

Intersection Summary	
Area Type:	Other
Cycle Length: 100	
Actuated Cycle Length: 100	
Offset: 0 (0%), Referenced to phase 2:NBT and 6:SBT, Start of Green	
Natural Cycle: 100	
Control Type: Actuated-Coordinated	
Maximum v/c Ratio: 0.98	
Intersection Signal Delay: 42.8	Intersection LOS: D
Intersection Capacity Utilization 85.8%	ICU Level of Service E
Analysis Period (min) 15	

Splits and Phases: 22: Broadway & Rio Bravo/Dennis Chavez

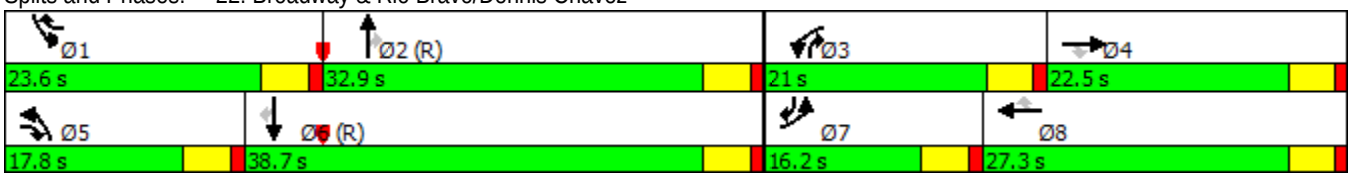

2040 PM No Build

Broadway and RioB/DennisC

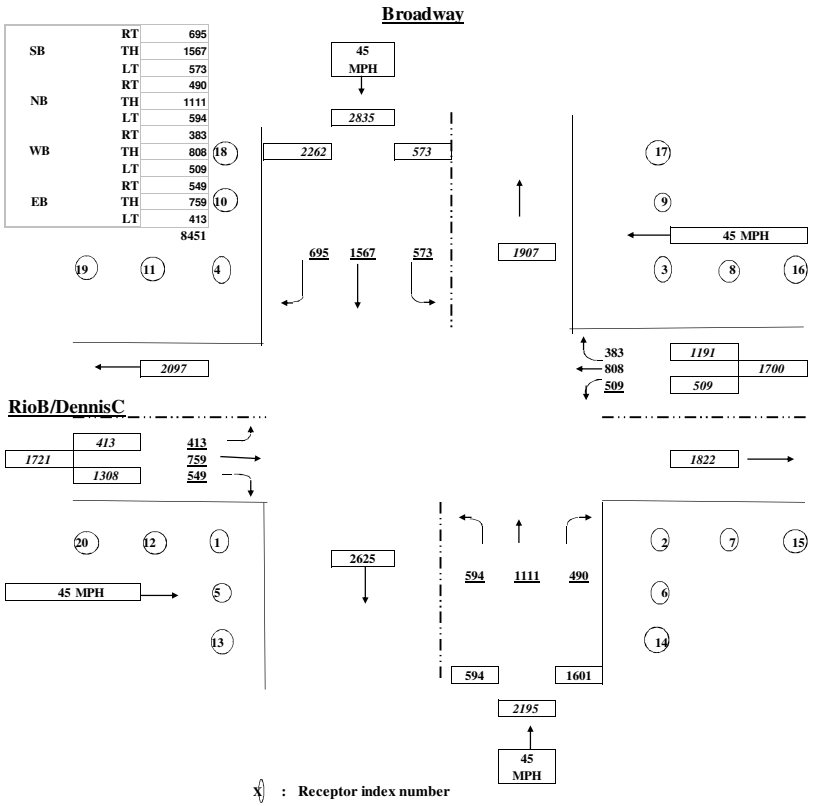

X : Receptor index number

: Approaching speed

F:\Santolina\2 Broadway-RioBravo\[25.xls]A

INTERSECTION CONFIGURATION , SIGNAL SETTING, AND EMISSION FACTOR

	EBL	EBT	EBR	WBL	WBT	WBR	NBL	NBT	NBR	SBL	SBT	SBR
LeftTurn Code*	1			1			1			1		
No. of Lanes	3	3	2	2	3	2	3	3	1	2	3	2
Lane Width (ft)	12	12	12	12	12	12	12	12	12	12	12	12
Median (ft)		4			4			4			4	
Offset Receptors and Lanes		0			0			0			0	
Cycle Length (sec)	100	100	100	100	100	100	100	100	100	100	100	100
1st Permitted Phase (inc yellow)	3.5	3.5	3.5	3.5	3.5	3.5	3.5	3.5	3.5	3.5	3.5	3.5
2nd Permitted Phase (inc yellow)	11.7	18	13.3	16.5	22.8	19.1	13.3	28.4	16.5	19.1	34.2	11.7
3rd Permitted Phase (inc yellow)												
Red Time (sec)	85	79	83	80	74	77	83	68	80	77	62	85
Lost Time (Incld'd. above)	0	0	0	0	0	0	0	0	0	0	0	0
Saturation Flow Rate (vphpl)	1900	1900	1900	1900	1900	1900	1900	1900	1900	1900	1900	1900
Speed (mph)		45			45			45			45	

* Left Turn Code : 1 - Exclusive left 2 - Left shared with through (IF 2 WBL should not be counted as a lane i.e. all LT lanes should be tallied under through)

Quee Links 800
Freeflow Links 1000

CALCULATION OF RECEPTOR'S COORDINATES

	COORDINATES			
RECEPTOR	X	Y	X	Y
#1			-72	-96
#2			84	-66
#3			66	90
#4			-90	72
#5			-72	-176
#6			84	-146
#7			164	-66
#8			146	90
#9			66	170
#10			-90	152
#11			-170	72
#12			-152	-96
#13			-72	-296
#14			84	-266
#15			284	-66
#16			266	90
#17			66	290
#18			-90	272
#19			-290	72
#20			-272	-96

Number of Links 24

CALCULATION OF LINK COORDINATES (w/ widths and lanes)

LINK	X1	Y1	X2	Y2	Width	Lanes
EB Approach	-1000	-38	0	-38	80	5
EB Departure	0	-32	1000	-32	56	3
EB Left	-1000	-2	0	-2	56	3
WB Approach	1000	32	0	32	80	5
WB Departure	0	38	-1000	38	56	3
WB Left	1000	2	0	2	44	2
NB Approach	38	-1000	38	0	68	4
NB Departure	32	0	32	1000	56	3
NB Left	2	-1000	2	0	56	3
SB Approach	-32	1000	-32	0	80	5
SB Departure	-38	0	-38	-1000	56	3
SB Left	-2	1000	-2	0	44	2
EB Left Queue	-62	-2	-862	-2	36	3
EB Through Queue	-62	-38	-862	-38	36	3
EB Right Queue	-62	-68	-862	-68	24	2
WB Left Queue	56	2	856	2	24	2
WB Through Queu	56	32	856	32	36	3
WB Right Queue	56	62	856	62	24	2
NB Left Queue	2	-56	2	-856	36	3
NB Through Queue	38	-56	38	-856	36	3
NB Right Queue	62	-56	62	-856	12	1
SB Left Queue	-2	62	-2	862	24	2
SB Through Queue	-32	62	-32	862	36	3
SB Right Queue	-62	62	-62	862	24	2

1 CAL3QHC (93157)
IBM-PC VERSION (2.01)

RUN NAME: 25.DAT

RUN BEGIN ON 01/01/05 AT 18:38

CAL3QHC: LINE SOURCE DISPERSION MODEL - VERSION 2.0, JANUARY 1992

JOB: Santolina RUN: 2-5
Broadway-RioBravoDennisChavez

SITE & METEOROLOGICAL VARIABLES

VS = 0.0 CM/S VD = 0.0 CM/S Z0 = 175. CM
U = 1.0 M/S CLAS = 4 (D) ATIM = 60. MINUTES
MIXH = 1000. M AMB = 3.0 PPM

LINK VARIABLES

```
         LINK DESCRIPTION     *         LINK COORDINATES (FT)          *
LENGTH  BRG TYPE   VPH    EF      H   W    V/C QUEUE
                              *   X1        Y1        X2        Y2     *
(FT)  (DEG)            (G/MI)  (FT) (FT)       (VEH)
      ------------------------*----------------------------------------*-
-------------------------------------------------------------
       1. EB A                *  -1000.0     -38.0       0.0     -38.0 *
1000.    90. AG   1308.   0.9   0.0 80.0
       2. EB D                *      0.0     -32.0    1000.0     -32.0 *
1000.    90. AG   1822.   0.9   0.0 56.0
       3. EB L                *  -1000.0      -2.0       0.0      -2.0 *
1000.    90. AG    413.   0.9   0.0 56.0
       4. WB A                *   1000.0      32.0       0.0      32.0 *
1000.   270. AG   1191.   0.9   0.0 80.0
       5. WB D                *      0.0      38.0   -1000.0      38.0 *
1000.   270. AG   2097.   0.9   0.0 56.0
       6. WB L                *   1000.0       2.0       0.0       2.0 *
1000.   270. AG    509.   0.9   0.0 44.0
       7. NB A                *     38.0   -1000.0      38.0       0.0 *
1000.   360. AG   1601.   0.9   0.0 68.0
       8. NB D                *     32.0       0.0      32.0    1000.0 *
1000.   360. AG   1907.   0.9   0.0 56.0
       9. NB L                *      2.0   -1000.0       2.0       0.0 *
1000.   360. AG    594.   0.9   0.0 56.0
      10. SB A                *    -32.0    1000.0     -32.0       0.0 *
1000.   180. AG   2262.   0.9   0.0 80.0
      11. SB D                *    -38.0       0.0     -38.0   -1000.0 *
1000.   180. AG   2625.   0.9   0.0 56.0
      12. SB L                *     -2.0    1000.0      -2.0       0.0 *
1000.   180. AG    573.   0.9   0.0 44.0
      13. EB L Q              *    -62.0      -2.0    -132.0      -2.0 *
70.   270. AG     29. 100.0   0.0 36.0 0.72   3.6
```

```
      14. EB T Q              *    -62.0     -38.0    -190.0     -38.0 *
128.   270. AG     27. 100.0   0.0 36.0 0.83   6.5
      15. EB R Q              *    -62.0     -68.0    -727.6     -68.0 *
666.   270. AG     19. 100.0   0.0 24.0 1.20  33.8
      16. WB L Q              *     56.0       2.0     199.7       2.0 *
144.    90. AG     18. 100.0   0.0 24.0 0.89   7.3
      17. WB T Q              *     56.0      32.0     164.8      32.0 *
109.    90. AG     25. 100.0   0.0 24.0 0.67   5.5
      18. WB R  Q             *     56.0      62.0     136.4      62.0 *
80.    90. AG     17. 100.0   0.0 24.0 0.56   4.1
      19. NB L  Q             *      2.0     -56.0       2.0    -139.4 *
83.   180. AG     26. 100.0   0.0 36.0 0.58   4.2
      20. NB T  Q             *     38.0     -56.0      38.0   -1741.1 *
1685.   180. AG     28. 100.0   0.0 36.0 1.62  85.6
      21. NB R  Q             *     62.0     -56.0      62.0    -308.6 *
253.   180. AG      8. 100.0   0.0 12.0 0.96  12.8
      22. SB L  Q             *     -2.0      62.0      -2.0     279.5 *
218.   360. AG     18. 100.0   0.0 24.0 1.00  11.1
      23. SB T  Q             *    -32.0      62.0     -32.0    2191.0 *
2129.   360. AG     26. 100.0   0.0 36.0 1.53 108.2
      24. SB R  Q             *    -62.0      62.0     -23.0    1101.3 *
1040.     2. AG      7. 100.0   0.0 12.0 1.11  52.8
1
```

PAGE 2

JOB: Santolina RUN: 2-5
Broadway-RioBravoDennisChavez

ADDITIONAL QUEUE LINK PARAMETERS

```
        LINK DESCRIPTION     *    CYCLE    RED     CLEARANCE  APPROACH
SATURATION   IDLE   SIGNAL   ARRIVAL
                             *    LENGTH   TIME    LOST TIME    VOL
FLOW RATE   EM FAC   TYPE     RATE
                             *     (SEC)   (SEC)    (SEC)      (VPH)
(VPH)    (gm/hr)
      -------------------------*-----------------------------------------
-------------------------------------
      13. EB L Q              *     100       85       3.0       413
1900       4.20      3        3
      14. EB T Q              *     100       79       3.0       759
1900       4.20      3        3
      15. EB R Q              *     100       83       3.0       549
1900       4.20      3        3
      16. WB L Q              *     100       80       3.0       509
1900       4.20      3        3
      17. WB T Q              *     100       74       3.0       808
1900       4.20      3        3
      18. WB R  Q             *     100       77       3.0       383
1900       4.20      3        3
      19. NB L  Q             *     100       77       3.0       594
1900       4.20      3        3
      20. NB T  Q             *     100       83       3.0      1111
1900       4.20      3        3
```

```
      21. NB R  Q             *     100       68       3.0       490
1900       4.20      3        3
      22. SB L  Q             *     100       80       3.0       573
1900       4.20      3        3
      23. SB T  Q             *     100       77       3.0      1567
1900       4.20      3        3
      24. SB R  Q             *     100       62       3.0       695
1900       4.20      3        3
```

RECEPTOR LOCATIONS

RECEPTOR	COORDINATES (FT) X	Y	Z
1. 1	-72.0	-96.0	5.0
2. 2	84.0	-66.0	5.0
3. 3	66.0	90.0	5.0
4. 4	-90.0	72.0	5.0
5. 5	-72.0	-176.0	5.0
6. 6	84.0	-146.0	5.0
7. 7	164.0	-66.0	5.0
8. 8	146.0	90.0	5.0
9. 9	66.0	170.0	5.0
10. 10	-90.0	152.0	5.0
11. 11	-170.0	72.0	5.0
12. 12	-152.0	-96.0	5.0
13. 13	-72.0	-296.0	5.0
14. 14	84.0	-266.0	5.0
15. 15	284.0	-66.0	5.0
16. 16	266.0	90.0	5.0
17. 17	66.0	290.0	5.0
18. 18	-90.0	272.0	5.0
19. 19	-290.0	72.0	5.0
20. 20	-272.0	-96.0	5.0

1

JOB: Santolina RUN: 2-5
Broadway-RioBravoDennisChavez

MODEL RESULTS

REMARKS : In search of the angle corresponding to the maximum concentration, only the first angle, of the angles with same maximum concentrations, is indicated as maximum.

WIND ANGLE RANGE: 0.-360.

```
 WIND  * CONCENTRATION
 ANGLE *      (PPM)
 (DEGR)* REC1  REC2  REC3  REC4  REC5  REC6  REC7  REC8  REC9  REC10
REC11 REC12 REC13 REC14 REC15 REC16 REC17 REC18 REC19 REC20
```

```
 ------*-------------------------------------------------------------------
-------------------------------------------------------------
   0.  *   3.1   3.1   3.1   3.0   3.1   3.0   3.1   3.0   3.1   3.0
3.0   3.0   3.1   3.0   3.1   3.0   3.1   3.0   3.0   3.0
   5.  *   3.2   3.1   3.0   3.2   3.1   3.0   3.1   3.0   3.0   3.2
3.0   3.1   3.1   3.0   3.1   3.0   3.0   3.2   3.0   3.0
  10.  *   3.3   3.0   3.0   3.2   3.1   3.0   3.0   3.0   3.0   3.2
3.0   3.1   3.1   3.0   3.0   3.0   3.0   3.2   3.0   3.0
  15.  *   3.2   3.0   3.0   3.2   3.1   3.0   3.0   3.0   3.0   3.2
3.0   3.1   3.1   3.0   3.0   3.0   3.0   3.2   3.0   3.0
  20.  *   3.1   3.0   3.0   3.2   3.1   3.0   3.0   3.0   3.0   3.2
3.0   3.1   3.1   3.0   3.0   3.0   3.0   3.2   3.0   3.0
  25.  *   3.1   3.0   3.0   3.2   3.1   3.0   3.0   3.0   3.0   3.2
3.0   3.1   3.1   3.0   3.0   3.0   3.0   3.2   3.0   3.0
  30.  *   3.1   3.1   3.0   3.2   3.1   3.0   3.1   3.0   3.0   3.2
3.0   3.1   3.1   3.0   3.1   3.0   3.0   3.2   3.0   3.0
  35.  *   3.1   3.1   3.0   3.2   3.1   3.0   3.1   3.0   3.0   3.2
3.0   3.0   3.1   3.0   3.1   3.0   3.0   3.2   3.0   3.1
  40.  *   3.1   3.1   3.0   3.2   3.1   3.0   3.1   3.0   3.0   3.2
3.0   3.1   3.1   3.0   3.1   3.0   3.0   3.2   3.0   3.1
  45.  *   3.1   3.1   3.0   3.2   3.1   3.0   3.1   3.0   3.0   3.2
3.0   3.1   3.1   3.0   3.1   3.0   3.0   3.2   3.0   3.1
  50.  *   3.1   3.1   3.0   3.2   3.1   3.0   3.1   3.0   3.0   3.2
3.0   3.1   3.1   3.0   3.1   3.0   3.0   3.2   3.0   3.1
  55.  *   3.1   3.1   3.0   3.2   3.1   3.0   3.1   3.0   3.0   3.2
3.0   3.1   3.1   3.0   3.1   3.0   3.0   3.2   3.0   3.1
  60.  *   3.1   3.1   3.0   3.2   3.1   3.0   3.1   3.0   3.0   3.2
3.0   3.0   3.1   3.0   3.1   3.0   3.0   3.2   3.0   3.1
  65.  *   3.1   3.1   3.0   3.0   3.1   3.0   3.1   3.0   3.0   3.0
3.0   3.0   3.1   3.0   3.1   3.0   3.0   3.0   3.0   3.1
  70.  *   3.1   3.1   3.0   3.0   3.1   3.0   3.1   3.0   3.0   3.0
3.0   3.0   3.1   3.0   3.1   3.0   3.0   3.0   3.0   3.1
  75.  *   3.1   3.1   3.0   3.0   3.1   3.0   3.1   3.0   3.0   3.1
3.0   3.0   3.1   3.0   3.1   3.0   3.0   3.1   3.0   3.1
  80.  *   3.1   3.1   3.0   3.0   3.1   3.0   3.1   3.0   3.0   3.0
3.0   3.0   3.1   3.0   3.1   3.0   3.0   3.0   3.0   3.0
  85.  *   3.1   3.1   3.0   3.1   3.1   3.0   3.1   3.0   3.0   3.1
3.0   3.0   3.1   3.0   3.1   3.0   3.0   3.1   3.0   3.0
  90.  *   3.1   3.1   3.0   3.1   3.1   3.0   3.1   3.0   3.0   3.1
3.0   3.0   3.1   3.0   3.1   3.0   3.0   3.1   3.1   3.0
  95.  *   3.1   3.0   3.0   3.1   3.1   3.0   3.0   3.0   3.0   3.1
3.1   3.0   3.1   3.0   3.0   3.0   3.0   3.1   3.1   3.0
 100.  *   3.1   3.0   3.0   3.0   3.1   3.0   3.0   3.0   3.0   3.0
3.1   3.0   3.1   3.0   3.0   3.0   3.0   3.0   3.1   3.0
 105.  *   3.1   3.0   3.0   3.0   3.1   3.0   3.0   3.0   3.0   3.0
3.1   3.0   3.1   3.0   3.0   3.0   3.0   3.1   3.1   3.0
 110.  *   3.1   3.0   3.0   3.1   3.1   3.0   3.0   3.0   3.0   3.0
3.1   3.0   3.1   3.0   3.0   3.0   3.0   3.0   3.1   3.0
 115.  *   3.1   3.0   3.0   3.1   3.1   3.0   3.0   3.0   3.0   3.0
3.1   3.0   3.1   3.0   3.0   3.0   3.0   3.0   3.1   3.0
 120.  *   3.1   3.0   3.0   3.1   3.1   3.0   3.0   3.0   3.0   3.1
3.1   3.0   3.1   3.0   3.0   3.0   3.0   3.2   3.1   3.0
 125.  *   3.1   3.0   3.0   3.1   3.1   3.0   3.0   3.0   3.0   3.1
3.1   3.0   3.1   3.0   3.0   3.0   3.0   3.2   3.1   3.0
```

```
 130.  *   3.1   3.0   3.0   3.1   3.1   3.0   3.0   3.0   3.0   3.1
3.1   3.0   3.1   3.0   3.0   3.0   3.0   3.2   3.1   3.0
 135.  *   3.1   3.0   3.0   3.1   3.1   3.0   3.0   3.0   3.0   3.1
3.1   3.0   3.1   3.0   3.0   3.0   3.0   3.2   3.1   3.0
 140.  *   3.1   3.0   3.0   3.1   3.1   3.0   3.0   3.0   3.0   3.1
3.1   3.0   3.1   3.0   3.0   3.0   3.0   3.2   3.1   3.0
 145.  *   3.1   3.0   3.0   3.1   3.1   3.0   3.0   3.0   3.0   3.1
3.1   3.0   3.1   3.0   3.0   3.0   3.0   3.2   3.1   3.0
 150.  *   3.1   3.0   3.0   3.1   3.1   3.0   3.0   3.0   3.0   3.1
3.1   3.0   3.1   3.0   3.0   3.0   3.0   3.2   3.1   3.0
 155.  *   3.1   3.0   3.0   3.2   3.1   3.0   3.0   3.0   3.0   3.0
3.1   3.0   3.1   3.0   3.0   3.0   3.0   3.1   3.1   3.0
 160.  *   3.1   3.0   3.0   3.2   3.1   3.0   3.0   3.0   3.0   3.0
3.1   3.0   3.1   3.0   3.0   3.0   3.0   3.1   3.1   3.0
 165.  *   3.1   3.0   3.0   3.2   3.1   3.0   3.0   3.0   3.0   3.0
3.1   3.0   3.1   3.0   3.0   3.0   3.0   3.1   3.1   3.0
 170.  *   3.1   3.0   3.0   3.2   3.1   3.0   3.0   3.0   3.0   3.0
3.1   3.0   3.1   3.0   3.0   3.0   3.0   3.0   3.1   3.0
 175.  *   3.1   3.0   3.0   3.2   3.1   3.0   3.0   3.0   3.0   3.0
3.1   3.0   3.1   3.0   3.0   3.0   3.0   3.0   3.1   3.0
 180.  *   3.1   3.1   3.1   3.1   3.1   3.1   3.0   3.0   3.0   3.0
3.1   3.0   3.1   3.1   3.0   3.0   3.0   3.0   3.1   3.0
 185.  *   3.1   3.2   3.1   3.1   3.1   3.2   3.0   3.0   3.0   3.0
3.1   3.0   3.1   3.1   3.0   3.0   3.1   3.0   3.1   3.0
 190.  *   3.0   3.2   3.1   3.1   3.0   3.2   3.0   3.0   3.1   3.0
3.1   3.0   3.0   3.2   3.0   3.0   3.1   3.0   3.1   3.0
 195.  *   3.0   3.2   3.0   3.1   3.0   3.2   3.0   3.0   3.1   3.0
3.1   3.0   3.0   3.2   3.0   3.0   3.1   3.0   3.1   3.0
 200.  *   3.0   3.2   3.0   3.1   3.0   3.2   3.0   3.0   3.1   3.0
3.1   3.0   3.0   3.2   3.0   3.0   3.1   3.0   3.1   3.0
 205.  *   3.0   3.2   3.1   3.1   3.0   3.2   3.0   3.0   3.1   3.0
3.1   3.0   3.0   3.2   3.0   3.0   3.1   3.0   3.1   3.0
1
```


JOB: Santolina RUN: 2-5
Broadway-RioBravoDennisChavez

```
 WIND  * CONCENTRATION
 ANGLE *      (PPM)
 (DEGR)* REC1  REC2  REC3  REC4  REC5  REC6  REC7  REC8  REC9  REC10
REC11 REC12 REC13 REC14 REC15 REC16 REC17 REC18 REC19 REC20
 ------*-------------------------------------------------------------------
-------------------------------------------------------
 210.  *   3.0   3.2   3.1   3.1   3.0   3.2   3.0   3.0   3.1   3.0
3.1   3.0   3.0   3.2   3.0   3.0   3.1   3.0   3.1   3.0
 215.  *   3.0   3.1   3.1   3.1   3.0   3.1   3.0   3.0   3.1   3.0
3.1   3.0   3.0   3.1   3.0   3.0   3.1   3.0   3.1   3.0
 220.  *   3.0   3.1   3.1   3.1   3.0   3.1   3.0   3.0   3.1   3.0
3.1   3.0   3.0   3.1   3.0   3.0   3.1   3.0   3.1   3.0
 225.  *   3.0   3.1   3.1   3.1   3.0   3.1   3.0   3.0   3.1   3.0
3.1   3.0   3.0   3.1   3.0   3.0   3.1   3.0   3.1   3.0
 230.  *   3.0   3.1   3.1   3.1   3.0   3.1   3.0   3.0   3.1   3.0
3.1   3.0   3.0   3.1   3.0   3.0   3.1   3.0   3.1   3.0
```

```
 235.  *   3.0   3.1   3.1   3.1   3.0   3.1   3.0   3.0   3.1   3.0
3.1   3.0   3.0   3.1   3.0   3.0   3.1   3.0   3.1   3.0
 240.  *   3.0   3.1   3.1   3.1   3.0   3.1   3.0   3.0   3.1   3.0
3.1   3.0   3.0   3.1   3.0   3.0   3.1   3.0   3.1   3.0
 245.  *   3.0   3.1   3.1   3.1   3.0   3.1   3.0   3.0   3.1   3.0
3.1   3.0   3.0   3.1   3.0   3.0   3.1   3.0   3.1   3.0
 250.  *   3.0   3.1   3.0   3.1   3.0   3.1   3.0   3.0   3.1   3.0
3.1   3.0   3.0   3.1   3.0   3.0   3.1   3.0   3.1   3.0
 255.  *   3.0   3.1   3.2   3.1   3.0   3.1   3.0   3.0   3.1   3.0
3.1   3.0   3.0   3.1   3.0   3.0   3.1   3.0   3.1   3.0
 260.  *   3.0   3.1   3.2   3.1   3.0   3.1   3.0   3.0   3.1   3.0
3.1   3.0   3.0   3.1   3.0   3.0   3.1   3.0   3.1   3.0
 265.  *   3.0   3.1   3.1   3.1   3.0   3.1   3.0   3.0   3.1   3.0
3.1   3.0   3.0   3.1   3.0   3.0   3.1   3.0   3.1   3.0
 270.  *   3.0   3.0   3.1   3.1   3.0   3.1   3.0   3.0   3.1   3.0
3.1   3.0   3.0   3.1   3.0   3.0   3.1   3.0   3.1   3.0
 275.  *   3.1   3.0   3.1   3.1   3.0   3.1   3.0   3.0   3.1   3.0
3.1   3.1   3.0   3.1   3.1   3.0   3.1   3.0   3.0   3.1
 280.  *   3.1   3.0   3.1   3.0   3.0   3.1   3.1   3.0   3.1   3.0
3.0   3.1   3.0   3.1   3.1   3.0   3.1   3.0   3.0   3.1
 285.  *   3.1   3.0   3.1   3.0   3.0   3.1   3.1   3.0   3.1   3.0
3.0   3.1   3.0   3.1   3.1   3.0   3.1   3.0   3.0   3.1
 290.  *   3.1   3.0   3.1   3.0   3.0   3.1   3.1   3.0   3.1   3.0
3.0   3.1   3.0   3.1   3.1   3.0   3.1   3.0   3.0   3.1
 295.  *   3.1   3.0   3.1   3.0   3.0   3.1   3.1   3.0   3.1   3.0
3.0   3.1   3.0   3.1   3.1   3.0   3.1   3.0   3.0   3.1
 300.  *   3.1   3.1   3.1   3.0   3.0   3.1   3.1   3.0   3.1   3.0
3.0   3.1   3.0   3.1   3.1   3.0   3.1   3.0   3.0   3.1
 305.  *   3.1   3.1   3.1   3.0   3.0   3.1   3.1   3.0   3.1   3.0
3.0   3.1   3.0   3.1   3.1   3.0   3.1   3.0   3.0   3.1
 310.  *   3.1   3.1   3.1   3.0   3.0   3.1   3.1   3.0   3.1   3.0
3.0   3.1   3.0   3.1   3.1   3.0   3.1   3.0   3.0   3.1
 315.  *   3.2   3.1   3.1   3.0   3.0   3.1   3.1   3.0   3.1   3.0
3.0   3.1   3.0   3.1   3.1   3.0   3.1   3.0   3.0   3.1
 320.  *   3.2   3.1   3.1   3.0   3.0   3.1   3.1   3.0   3.1   3.0
3.0   3.1   3.0   3.1   3.1   3.0   3.1   3.0   3.0   3.1
 325.  *   3.2   3.1   3.1   3.0   3.0   3.1   3.1   3.0   3.1   3.0
3.0   3.1   3.0   3.1   3.1   3.0   3.1   3.0   3.0   3.1
 330.  *   3.2   3.1   3.1   3.0   3.0   3.0   3.1   3.0   3.1   3.0
3.0   3.0   3.0   3.1   3.1   3.0   3.1   3.0   3.0   3.0
 335.  *   3.1   3.0   3.1   3.0   3.0   3.0   3.0   3.0   3.1   3.0
3.0   3.0   3.0   3.2   3.0   3.0   3.1   3.0   3.0   3.0
 340.  *   3.0   3.0   3.1   3.0   3.0   3.0   3.0   3.0   3.1   3.0
3.0   3.0   3.0   3.2   3.0   3.0   3.1   3.0   3.0   3.0
 345.  *   3.0   3.1   3.1   3.0   3.0   3.0   3.0   3.0   3.1   3.0
3.0   3.0   3.0   3.1   3.0   3.0   3.1   3.0   3.0   3.0
 350.  *   3.0   3.0   3.1   3.0   3.0   3.0   3.0   3.0   3.1   3.0
3.0   3.0   3.0   3.0   3.0   3.0   3.1   3.0   3.0   3.0
 355.  *   3.0   3.1   3.1   3.0   3.0   3.0   3.1   3.0   3.1   3.0
3.0   3.0   3.0   3.0   3.1   3.0   3.1   3.0   3.0   3.0
 360.  *   3.1   3.1   3.1   3.0   3.1   3.0   3.1   3.0   3.1   3.0
3.0   3.0   3.1   3.0   3.1   3.0   3.1   3.0   3.0   3.0
 -------*-----------------------------------------------------------------
-------------------------------------------------------
```

```
 MAX   *   3.3   3.2   3.2   3.2   3.1   3.2   3.1   3.0   3.1   3.2
3.1   3.1   3.1   3.2   3.1   3.0   3.1   3.2   3.1   3.1
 DEGR. *   10   185   255     5     0   185     0     0     0     5    95
5     0   190     0     0     0     5    90    35

 THE HIGHEST CONCENTRATION IS    3.30 PPM AT   10 DEGREES FROM REC1 .
1

PAGE  5
      JOB: Santolina                                          RUN: 2-5
Broadway-RioBravoDennisChavez

      RECEPTOR - LINK MATRIX FOR THE ANGLE PRODUCING
      THE MAXIMUM CONCENTRATION FOR EACH RECEPTOR

          *    CO/LINK  (PPM)
          *    ANGLE (DEGREES)
          *  REC1  REC2  REC3  REC4  REC5  REC6  REC7  REC8  REC9  REC10
REC11 REC12 REC13 REC14 REC15 REC16 REC17 REC18 REC19 REC20
   LINK # *    10   185   255     5     0   185     0     0     0     5
95     5     0   190     0     0     0     5    90    35
   -------*-----------------------------------------------------------
-------------------------------------------------------
       1  *   0.0   0.0   0.0   0.0   0.0   0.0   0.0   0.0   0.0   0.0
0.0   0.0   0.0   0.0   0.0   0.0   0.0   0.0   0.0   0.0
       2  *   0.0   0.0   0.0   0.0   0.0   0.0   0.1   0.0   0.0   0.0
0.0   0.0   0.0   0.0   0.1   0.0   0.0   0.0   0.0   0.0
       3  *   0.0   0.0   0.0   0.0   0.0   0.0   0.0   0.0   0.0   0.0
0.0   0.0   0.0   0.0   0.0   0.0   0.0   0.0   0.0   0.0
       4  *   0.0   0.0   0.0   0.0   0.0   0.0   0.0   0.0   0.0   0.0
0.0   0.0   0.0   0.0   0.0   0.0   0.0   0.0   0.0   0.0
       5  *   0.0   0.0   0.1   0.0   0.0   0.0   0.0   0.0   0.0   0.0
0.1   0.0   0.0   0.0   0.0   0.0   0.0   0.0   0.1   0.0
       6  *   0.0   0.0   0.0   0.0   0.0   0.0   0.0   0.0   0.0   0.0
0.0   0.0   0.0   0.0   0.0   0.0   0.0   0.0   0.0   0.0
       7  *   0.0   0.1   0.0   0.0   0.0   0.1   0.0   0.0   0.0   0.0
0.0   0.0   0.0   0.1   0.0   0.0   0.0   0.0   0.0   0.0
       8  *   0.0   0.0   0.1   0.0   0.0   0.0   0.0   0.0   0.1   0.0
0.0   0.0   0.0   0.0   0.0   0.0   0.1   0.0   0.0   0.0
       9  *   0.0   0.0   0.0   0.0   0.0   0.0   0.0   0.0   0.0   0.0
0.0   0.0   0.0   0.0   0.0   0.0   0.0   0.0   0.0   0.0
      10  *   0.1   0.0   0.0   0.1   0.0   0.0   0.0   0.0   0.0   0.1
0.0   0.0   0.0   0.0   0.0   0.0   0.0   0.1   0.0   0.0
      11  *   0.1   0.0   0.0   0.0   0.1   0.0   0.0   0.0   0.0   0.0
0.0   0.0   0.1   0.0   0.0   0.0   0.0   0.0   0.0   0.0
      12  *   0.0   0.0   0.0   0.0   0.0   0.0   0.0   0.0   0.0   0.0
0.0   0.0   0.0   0.0   0.0   0.0   0.0   0.0   0.0   0.0
      13  *   0.0   0.0   0.0   0.0   0.0   0.0   0.0   0.0   0.0   0.0
0.0   0.0   0.0   0.0   0.0   0.0   0.0   0.0   0.0   0.0
      14  *   0.0   0.0   0.0   0.0   0.0   0.0   0.0   0.0   0.0   0.0
0.0   0.1   0.0   0.0   0.0   0.0   0.0   0.0   0.0   0.0
      15  *   0.0   0.0   0.0   0.0   0.0   0.0   0.0   0.0   0.0   0.0
0.0   0.0   0.0   0.0   0.0   0.0   0.0   0.0   0.0   0.1
```

```
      16  *   0.0   0.0   0.0   0.0   0.0   0.0   0.0   0.0   0.0   0.0
0.0   0.0   0.0   0.0   0.0   0.0   0.0   0.0   0.0   0.0
      17  *   0.0   0.0   0.0   0.0   0.0   0.0   0.0   0.0   0.0   0.0
0.0   0.0   0.0   0.0   0.0   0.0   0.0   0.0   0.0   0.0
      18  *   0.0   0.0   0.0   0.0   0.0   0.0   0.0   0.0   0.0   0.0
0.0   0.0   0.0   0.0   0.0   0.0   0.0   0.0   0.0   0.0
      19  *   0.0   0.0   0.0   0.0   0.0   0.0   0.0   0.0   0.0   0.0
0.0   0.0   0.0   0.0   0.0   0.0   0.0   0.0   0.0   0.0
      20  *   0.0   0.1   0.0   0.0   0.0   0.1   0.0   0.0   0.0   0.0
0.0   0.0   0.0   0.1   0.0   0.0   0.0   0.0   0.0   0.0
      21  *   0.0   0.0   0.0   0.0   0.0   0.0   0.0   0.0   0.0   0.0
0.0   0.0   0.0   0.0   0.0   0.0   0.0   0.0   0.0   0.0
      22  *   0.0   0.0   0.0   0.0   0.0   0.0   0.0   0.0   0.0   0.0
0.0   0.0   0.0   0.0   0.0   0.0   0.0   0.0   0.0   0.0
      23  *   0.1   0.0   0.0   0.1   0.0   0.0   0.0   0.0   0.0   0.1
0.0   0.0   0.0   0.0   0.0   0.0   0.0   0.1   0.0   0.0
      24  *   0.0   0.0   0.0   0.0   0.0   0.0   0.0   0.0   0.0   0.0
0.0   0.0   0.0   0.0   0.0   0.0   0.0   0.0   0.0   0.0

 RUN ENDED ON 01/01/05 AT 18:38
```

Broadway/Rio Bravo Intersection: Santolina Scenario

Lane Group	EBL	EBT	EBR	WBL	WBT	WBR	NBL	NBT	NBR	SBL	SBT	SBR
Lane Configurations												
Traffic Volume (vph)	466	675	708	414	665	273	694	1074	353	394	1622	773
Future Volume (vph)	466	675	708	414	665	273	694	1074	353	394	1622	773
Ideal Flow (vphpl)	1900	1900	1900	1900	1900	1900	1900	1900	1900	1900	1900	1900
Storage Length (ft)	500		300	500		300	500		300	500		300
Storage Lanes	3		2	2		2	3		1	2		2
Taper Length (ft)	25			25			25			25		
Lane Util. Factor	0.94	0.91	0.88	0.97	0.91	0.88	0.94	0.91	1.00	0.97	0.91	0.88
Frt			0.850			0.850			0.850			0.850
Flt Protected	0.950			0.950			0.950			0.950		
Satd. Flow (prot)	4990	5085	2787	3433	5085	2787	4990	5085	1583	3433	5085	2787
Flt Permitted	0.950			0.950			0.950			0.950		
Satd. Flow (perm)	4990	5085	2787	3433	5085	2787	4990	5085	1583	3433	5085	2787
Right Turn on Red			Yes			Yes			Yes			Yes
Satd. Flow (RTOR)			65			65			65			65
Link Speed (mph)		45			45			45			45	
Link Distance (ft)		6653			1798			1894			1725	
Travel Time (s)		100.8			27.2			28.7			26.1	
Peak Hour Factor	0.92	0.92	0.92	0.92	0.92	0.92	0.92	0.92	0.92	0.92	0.92	0.92
Adj. Flow (vph)	507	734	770	450	723	297	754	1167	384	428	1763	840
Shared Lane Traffic (%)												
Lane Group Flow (vph)	507	734	770	450	723	297	754	1167	384	428	1763	840
Enter Blocked Intersection	No	No	No	No	No	No	No	No	No	No	No	No
Lane Alignment	Left	Left	Right	Left	Left	Right	Left	Left	Right	Left	Left	Right
Median Width(ft)		36			36			36			36	
Link Offset(ft)		0			0			0			0	
Crosswalk Width(ft)		16			16			16			16	
Two way Left Turn Lane												
Headway Factor	1.00	1.00	1.00	1.00	1.00	1.00	1.00	1.00	1.00	1.00	1.00	1.00
Turning Speed (mph)	15		9	15		9	15		9	15		9
Number of Detectors	1	2	1	1	2	1	1	2	1	1	2	1
Detector Template	Left	Thru	Right	Left	Thru	Right	Left	Thru	Right	Left	Thru	Right
Leading Detector (ft)	20	100	20	20	100	20	20	100	20	20	100	20
Trailing Detector (ft)	0	0	0	0	0	0	0	0	0	0	0	0
Detector 1 Position(ft)	0	0	0	0	0	0	0	0	0	0	0	0
Detector 1 Size(ft)	20	6	20	20	6	20	20	6	20	20	6	20
Detector 1 Type	Cl+Ex	Cl+Ex	Cl+Ex	Cl+Ex	Cl+Ex	Cl+Ex	Cl+Ex	Cl+Ex	Cl+Ex	Cl+Ex	Cl+Ex	Cl+Ex
Detector 1 Channel												
Detector 1 Extend (s)	0.0	0.0	0.0	0.0	0.0	0.0	0.0	0.0	0.0	0.0	0.0	0.0
Detector 1 Queue (s)	0.0	0.0	0.0	0.0	0.0	0.0	0.0	0.0	0.0	0.0	0.0	0.0
Detector 1 Delay (s)	0.0	0.0	0.0	0.0	0.0	0.0	0.0	0.0	0.0	0.0	0.0	0.0
Detector 2 Position(ft)		94			94			94			94	
Detector 2 Size(ft)		6			6			6			6	
Detector 2 Type		Cl+Ex			Cl+Ex			Cl+Ex			Cl+Ex	
Detector 2 Channel												
Detector 2 Extend (s)		0.0			0.0			0.0			0.0	
Turn Type	Prot	NA	pm+ov	Prot	NA	pm+ov	Prot	NA	pm+ov	Prot	NA	pm+ov
Protected Phases	7	4	5	3	8	1	5	2	3	1	6	7
Permitted Phases			4			8			2			6

Lane Group	EBL	EBT	EBR	WBL	WBT	WBR	NBL	NBT	NBR	SBL	SBT	SBR
Detector Phase	7	4	5	3	8	1	5	2	3	1	6	7
Switch Phase												
Minimum Initial (s)	5.0	5.0	5.0	5.0	5.0	5.0	5.0	5.0	5.0	5.0	5.0	5.0
Minimum Split (s)	9.5	22.5	9.5	9.5	22.5	9.5	9.5	22.5	9.5	9.5	22.5	9.5
Total Split (s)	17.4	22.6	19.8	18.0	23.2	20.2	19.8	39.2	18.0	20.2	39.6	17.4
Total Split (%)	17.4%	22.6%	19.8%	18.0%	23.2%	20.2%	19.8%	39.2%	18.0%	20.2%	39.6%	17.4%
Maximum Green (s)	12.9	18.1	15.3	13.5	18.7	15.7	15.3	34.7	13.5	15.7	35.1	12.9
Yellow Time (s)	3.5	3.5	3.5	3.5	3.5	3.5	3.5	3.5	3.5	3.5	3.5	3.5
All-Red Time (s)	1.0	1.0	1.0	1.0	1.0	1.0	1.0	1.0	1.0	1.0	1.0	1.0
Lost Time Adjust (s)	0.0	0.0	0.0	0.0	0.0	0.0	0.0	0.0	0.0	0.0	0.0	0.0
Total Lost Time (s)	4.5	4.5	4.5	4.5	4.5	4.5	4.5	4.5	4.5	4.5	4.5	4.5
Lead/Lag	Lead	Lag	Lead	Lead	Lag	Lead	Lead	Lag	Lead	Lead	Lag	Lead
Lead-Lag Optimize?	Yes	Yes	Yes	Yes	Yes	Yes	Yes	Yes	Yes	Yes	Yes	Yes
Vehicle Extension (s)	3.0	3.0	3.0	3.0	3.0	3.0	3.0	3.0	3.0	3.0	3.0	3.0
Recall Mode	None	None	None	None	None	None	None	C-Max	None	None	C-Max	None
Walk Time (s)		7.0			7.0			7.0			7.0	
Flash Dont Walk (s)		11.0			11.0			11.0			11.0	
Pedestrian Calls (#/hr)		0			0			0			0	
Act Effct Green (s)	12.9	17.6	37.9	13.5	18.2	37.9	15.8	35.7	53.7	15.2	35.1	52.5
Actuated g/C Ratio	0.13	0.18	0.38	0.14	0.18	0.38	0.16	0.36	0.54	0.15	0.35	0.52
v/c Ratio	0.79	0.82	0.70	0.97	0.78	0.27	0.96	0.64	0.44	0.82	0.99	0.56
Control Delay	61.7	29.5	8.7	79.6	45.7	17.0	65.9	29.1	13.5	54.9	51.6	16.4
Queue Delay	0.0	0.0	0.0	0.0	0.0	0.0	0.0	0.0	0.0	0.0	0.0	0.0
Total Delay	61.7	29.5	8.7	79.6	45.7	17.0	65.9	29.1	13.5	54.9	51.6	16.4
LOS	E	C	A	E	D	B	E	C	B	D	D	B
Approach Delay		29.6			50.3			38.6			42.3	
Approach LOS		C			D			D			D	

Intersection Summary	
Area Type:	Other
Cycle Length: 100	
Actuated Cycle Length: 100	
Offset: 0 (0%), Referenced to phase 2:NBT and 6:SBT, Start of Green	
Natural Cycle: 100	
Control Type: Actuated-Coordinated	
Maximum v/c Ratio: 0.99	
Intersection Signal Delay: 39.8	Intersection LOS: D
Intersection Capacity Utilization 84.4%	ICU Level of Service E
Analysis Period (min) 15	

Splits and Phases: 22: Broadway & Rio Bravo/Dennis Chavez

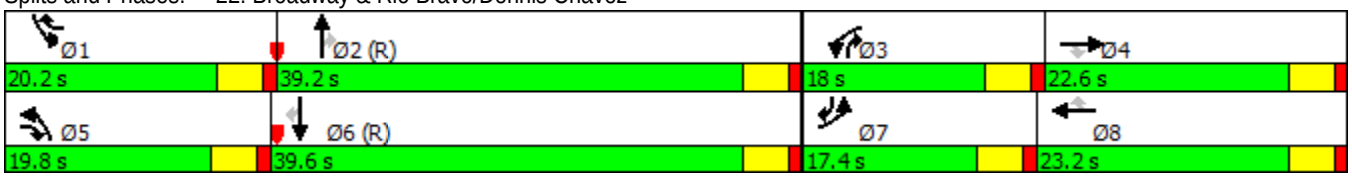

2040 PM Build

Broadway and RioB/DennisC

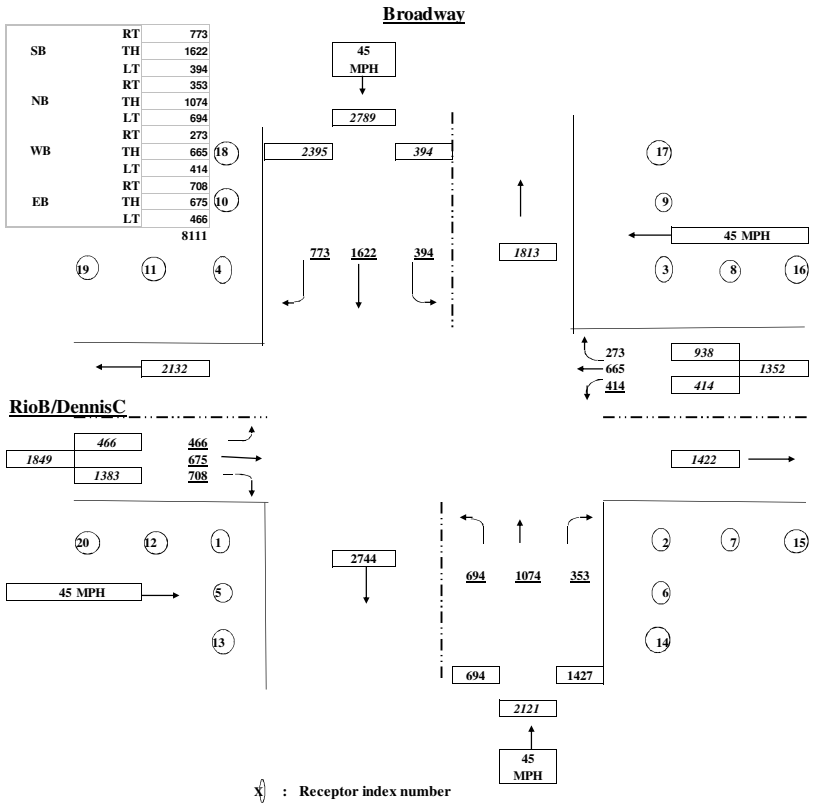

X : Receptor index number

: Approaching speed

F:\Santolina\2 Broadway-RioBravo\[26.xls]A

INTERSECTION CONFIGURATION , SIGNAL SETTING, AND EMISSION FACTOR

	EBL	EBT	EBR	WBL	WBT	WBR	NBL	NBT	NBR	SBL	SBT	SBR
LeftTurn Code*	1			1			1			1		
No. of Lanes	3	3	2	2	3	2	3	3	1	2	3	2
Lane Width (ft)	12	12	12	12	12	12	12	12	12	12	12	12
Median (ft)		4			4			4			4	
Offset Receptors and Lanes		0			0			0			0	
Cycle Length (sec)	100	100	100	100	100	100	100	100	100	100	100	100
1st Permitted Phase (inc yellow)	3.5	3.5	3.5	3.5	3.5	3.5	3.5	3.5	3.5	3.5	3.5	3.5
2nd Permitted Phase (inc yellow)	12.9	18.1	15.3	13.5	18.7	15.7	15.3	34.7	13.5	15.7	35.1	12.9
3rd Permitted Phase (inc yellow)												
Red Time (sec)	84	78	81	83	78	81	81	62	83	81	61	84
Lost Time (Incld'd. above)	0	0	0	0	0	0	0	0	0	0	0	0
Saturation Flow Rate (vphpl)	1900	1900	1900	1900	1900	1900	1900	1900	1900	1900	1900	1900
Speed (mph)		45			45			45			45	

* Left Turn Code : 1 - Exclusive left 2 - Left shared with through (IF 2 WBL should not be counted as a lane i.e. all LT lanes should be tallied under through)

Quee Links 800
Freeflow Links 1000

CALCULATION OF RECEPTOR'S COORDINATES

	COORDINATES			
RECEPTOR	X	Y	X	Y
#1			-72	-96
#2			84	-66
#3			66	90
#4			-90	72
#5			-72	-176
#6			84	-146
#7			164	-66
#8			146	90
#9			66	170
#10			-90	152
#11			-170	72
#12			-152	-96
#13			-72	-296
#14			84	-266
#15			284	-66
#16			266	90
#17			66	290
#18			-90	272
#19			-290	72
#20			-272	-96

Number of Links 24

CALCULATION OF LINK COORDINATES (w/ widths and lanes)

LINK	X1	Y1	X2	Y2	Width	Lanes
EB Approach	-1000	-38	0	-38	80	5
EB Departure	0	-32	1000	-32	56	3
EB Left	-1000	-2	0	-2	56	3
WB Approach	1000	32	0	32	80	5
WB Departure	0	38	-1000	38	56	3
WB Left	1000	2	0	2	44	2
NB Approach	38	-1000	38	0	68	4
NB Departure	32	0	32	1000	56	3
NB Left	2	-1000	2	0	56	3
SB Approach	-32	1000	-32	0	80	5
SB Departure	-38	0	-38	-1000	56	3
SB Left	-2	1000	-2	0	44	2
EB Left Queue	-62	-2	-862	-2	36	3
EB Through Queue	-62	-38	-862	-38	36	3
EB Right Queue	-62	-68	-862	-68	24	2
WB Left Queue	56	2	856	2	24	2
WB Through Queu	56	32	856	32	36	3
WB Right Queue	56	62	856	62	24	2
NB Left Queue	2	-56	2	-856	36	3
NB Through Queue	38	-56	38	-856	36	3
NB Right Queue	62	-56	62	-856	12	1
SB Left Queue	-2	62	-2	862	24	2
SB Through Queue	-32	62	-32	862	36	3
SB Right Queue	-62	62	-62	862	24	2

```
1                    CAL3QHC (93157)
                     IBM-PC VERSION (2.01)


                     RUN NAME: 26.DAT

                     RUN BEGIN ON 01/01/05 AT 18:38

                     CAL3QHC: LINE SOURCE DISPERSION MODEL - VERSION 2.0,
JANUARY 1992

      JOB: Santolina                                            RUN: 2-6
Broadway and RioB/DennisC

       SITE & METEOROLOGICAL VARIABLES
       -------------------------------
       VS =   0.0 CM/S       VD =   0.0 CM/S       Z0 = 175. CM
        U =  1.0 M/S         CLAS =   4  (D)     ATIM =  60. MINUTES
MIXH =  1000. M   AMB =  3.0 PPM

       LINK VARIABLES
       --------------
         LINK DESCRIPTION     *         LINK COORDINATES (FT)          *
LENGTH  BRG TYPE   VPH    EF      H   W    V/C QUEUE
                              *   X1        Y1        X2        Y2     *
(FT)  (DEG)            (G/MI)  (FT) (FT)       (VEH)
      ------------------------*----------------------------------------*-
-------------------------------------------------------------
       1. EB A                *  -1000.0     -38.0       0.0     -38.0 *
1000.    90. AG   1383.   0.9   0.0 80.0
       2. EB D                *      0.0     -32.0    1000.0     -32.0 *
1000.    90. AG   1422.   0.9   0.0 56.0
       3. EB L                *  -1000.0      -2.0       0.0      -2.0 *
1000.    90. AG    466.   0.9   0.0 56.0
       4. WB A                *   1000.0      32.0       0.0      32.0 *
1000.   270. AG    938.   0.9   0.0 80.0
       5. WB D                *      0.0      38.0   -1000.0      38.0 *
1000.   270. AG   2132.   0.9   0.0 56.0
       6. WB L                *   1000.0       2.0       0.0       2.0 *
1000.   270. AG    414.   0.9   0.0 44.0
       7. NB A                *     38.0   -1000.0      38.0       0.0 *
1000.   360. AG   1427.   0.9   0.0 68.0
       8. NB D                *     32.0       0.0      32.0    1000.0 *
1000.   360. AG   1813.   0.9   0.0 56.0
       9. NB L                *      2.0   -1000.0       2.0       0.0 *
1000.   360. AG    694.   0.9   0.0 56.0
      10. SB A                *    -32.0    1000.0     -32.0       0.0 *
1000.   180. AG   2395.   0.9   0.0 80.0
      11. SB D                *    -38.0       0.0     -38.0   -1000.0 *
1000.   180. AG   2744.   0.9   0.0 56.0
      12. SB L                *     -2.0    1000.0      -2.0       0.0 *
1000.   180. AG    394.   0.9   0.0 44.0
      13. EB L Q              *    -62.0      -2.0    -140.9      -2.0 *
79.   270. AG     28. 100.0   0.0 36.0 0.74   4.0
```

```
      14. EB T Q              *    -62.0     -38.0    -160.7     -38.0 *
99.   270. AG     26. 100.0   0.0 36.0 0.70   5.0
      15. EB R Q              *    -62.0     -68.0   -1190.8     -68.0 *
1129.   270. AG     18. 100.0   0.0 24.0 1.33  57.3
      16. WB L Q              *     56.0       2.0     185.6       2.0 *
130.    90. AG     19. 100.0   0.0 24.0 0.91   6.6
      17. WB T Q              *     56.0      32.0     152.2      32.0 *
96.    90. AG     26. 100.0   0.0 24.0 0.68   4.9
      18. WB R  Q             *     56.0      62.0     116.2      62.0 *
60.    90. AG     18. 100.0   0.0 24.0 0.51   3.1
      19. NB L  Q             *      2.0     -56.0       2.0    -184.5 *
128.   180. AG     27. 100.0   0.0 36.0 0.87   6.5
      20. NB T  Q             *     38.0     -56.0      38.0    -177.4 *
121.   180. AG     21. 100.0   0.0 36.0 0.57   6.2
      21. NB R  Q             *     62.0     -56.0      62.0   -1560.6 *
1505.   180. AG      9. 100.0   0.0 12.0 1.55  76.4
      22. SB L  Q             *     -2.0      62.0      -2.0     156.2 *
94.   360. AG     18. 100.0   0.0 24.0 0.74   4.8
      23. SB T  Q             *    -32.0      62.0     -32.0     257.7 *
196.   360. AG     21. 100.0   0.0 36.0 0.84   9.9
      24. SB R  Q             *    -62.0      62.0     169.1    6224.8 *
6167.     2. AG      9. 100.0   0.0 12.0 3.70 313.3
1

PAGE  2
      JOB: Santolina                                          RUN: 2-6
Broadway and RioB/DennisC
       ADDITIONAL QUEUE LINK PARAMETERS
       --------------------------------
         LINK DESCRIPTION     *    CYCLE    RED     CLEARANCE  APPROACH
SATURATION   IDLE   SIGNAL   ARRIVAL
                              *    LENGTH   TIME    LOST TIME    VOL
FLOW RATE   EM FAC   TYPE     RATE
                              *     (SEC)   (SEC)    (SEC)      (VPH)
(VPH)    (gm/hr)
      -------------------------*-----------------------------------------
-------------------------------------
      13. EB L Q              *     100       84       3.0       466
1900       4.20      3        3
      14. EB T Q              *     100       78       3.0       675
1900       4.20      3        3
      15. EB R Q              *     100       81       3.0       708
1900       4.20      3        3
      16. WB L Q              *     100       83       3.0       414
1900       4.20      3        3
      17. WB T Q              *     100       78       3.0       665
1900       4.20      3        3
      18. WB R  Q             *     100       81       3.0       273
1900       4.20      3        3
      19. NB L  Q             *     100       81       3.0       694
1900       4.20      3        3
      20. NB T  Q             *     100       62       3.0      1074
1900       4.20      3        3
```

```
      21. NB R  Q             *     100       83       3.0       353
1900       4.20      3        3
      22. SB L  Q             *     100       81       3.0       394
1900       4.20      3        3
      23. SB T  Q             *     100       61       3.0      1622
1900       4.20      3        3
      24. SB R  Q             *     100       84       3.0       773
1900       4.20      3        3
```

RECEPTOR LOCATIONS

RECEPTOR	COORDINATES (FT) X	Y	Z
1. 1	-72.0	-96.0	5.0
2. 2	84.0	-66.0	5.0
3. 3	66.0	90.0	5.0
4. 4	-90.0	72.0	5.0
5. 5	-72.0	-176.0	5.0
6. 6	84.0	-146.0	5.0
7. 7	164.0	-66.0	5.0
8. 8	146.0	90.0	5.0
9. 9	66.0	170.0	5.0
10. 10	-90.0	152.0	5.0
11. 11	-170.0	72.0	5.0
12. 12	-152.0	-96.0	5.0
13. 13	-72.0	-296.0	5.0
14. 14	84.0	-266.0	5.0
15. 15	284.0	-66.0	5.0
16. 16	266.0	90.0	5.0
17. 17	66.0	290.0	5.0
18. 18	-90.0	272.0	5.0
19. 19	-290.0	72.0	5.0
20. 20	-272.0	-96.0	5.0

1

JOB: Santolina RUN: 2-6
Broadway and RioB/DennisC

MODEL RESULTS

REMARKS : In search of the angle corresponding to the maximum concentration, only the first angle, of the angles with same maximum concentrations, is indicated as maximum.

WIND ANGLE RANGE: 0.-360.

```
 WIND  * CONCENTRATION
 ANGLE *      (PPM)
 (DEGR)* REC1  REC2  REC3  REC4  REC5  REC6  REC7  REC8  REC9  REC10
REC11 REC12 REC13 REC14 REC15 REC16 REC17 REC18 REC19 REC20
```

```
 ------*-------------------------------------------------------------------
-------------------------------------------------------------
   0.  *   3.1   3.0   3.1   3.0   3.1   3.0   3.0   3.0   3.1   3.0
3.0   3.0   3.1   3.0   3.0   3.0   3.1   3.0   3.0   3.0
   5.  *   3.1   3.0   3.0   3.1   3.1   3.0   3.0   3.0   3.0   3.1
3.0   3.0   3.1   3.0   3.0   3.0   3.0   3.1   3.0   3.0
  10.  *   3.2   3.0   3.0   3.1   3.1   3.0   3.0   3.0   3.0   3.1
3.0   3.0   3.1   3.0   3.0   3.0   3.0   3.1   3.0   3.0
  15.  *   3.2   3.0   3.0   3.1   3.1   3.0   3.0   3.0   3.0   3.1
3.0   3.0   3.1   3.0   3.0   3.0   3.0   3.1   3.0   3.0
  20.  *   3.1   3.0   3.0   3.1   3.1   3.0   3.0   3.0   3.0   3.1
3.0   3.0   3.1   3.0   3.0   3.0   3.0   3.1   3.0   3.0
  25.  *   3.1   3.0   3.0   3.1   3.1   3.0   3.0   3.0   3.0   3.1
3.0   3.0   3.1   3.0   3.0   3.0   3.0   3.1   3.0   3.0
  30.  *   3.1   3.0   3.0   3.1   3.1   3.0   3.0   3.0   3.0   3.1
3.0   3.0   3.1   3.0   3.0   3.0   3.0   3.1   3.0   3.0
  35.  *   3.1   3.0   3.0   3.1   3.1   3.0   3.0   3.0   3.0   3.1
3.0   3.0   3.1   3.0   3.0   3.0   3.0   3.1   3.0   3.0
  40.  *   3.1   3.0   3.0   3.1   3.1   3.0   3.0   3.0   3.0   3.1
3.0   3.0   3.1   3.0   3.0   3.0   3.0   3.1   3.0   3.1
  45.  *   3.1   3.0   3.0   3.1   3.1   3.0   3.0   3.0   3.0   3.1
3.0   3.1   3.1   3.0   3.0   3.0   3.0   3.1   3.0   3.1
  50.  *   3.1   3.0   3.0   3.1   3.1   3.0   3.0   3.0   3.0   3.1
3.0   3.1   3.1   3.0   3.0   3.0   3.0   3.1   3.0   3.1
  55.  *   3.1   3.1   3.0   3.1   3.1   3.0   3.1   3.0   3.0   3.1
3.0   3.1   3.1   3.0   3.1   3.0   3.0   3.1   3.0   3.1
  60.  *   3.1   3.1   3.0   3.1   3.1   3.0   3.1   3.0   3.0   3.1
3.0   3.0   3.1   3.0   3.1   3.0   3.0   3.1   3.0   3.1
  65.  *   3.1   3.1   3.0   3.1   3.1   3.0   3.1   3.0   3.0   3.1
3.0   3.0   3.1   3.0   3.1   3.0   3.0   3.1   3.0   3.1
  70.  *   3.1   3.1   3.0   3.1   3.1   3.0   3.1   3.0   3.0   3.1
3.0   3.0   3.1   3.0   3.1   3.0   3.0   3.1   3.0   3.1
  75.  *   3.1   3.1   3.0   3.1   3.1   3.0   3.1   3.0   3.0   3.1
3.0   3.0   3.1   3.0   3.1   3.0   3.0   3.1   3.0   3.1
  80.  *   3.1   3.1   3.0   3.1   3.1   3.0   3.1   3.0   3.0   3.1
3.0   3.0   3.1   3.0   3.1   3.0   3.0   3.1   3.0   3.0
  85.  *   3.1   3.1   3.0   3.1   3.1   3.0   3.1   3.0   3.0   3.1
3.0   3.0   3.1   3.0   3.1   3.0   3.0   3.1   3.0   3.0
  90.  *   3.1   3.0   3.0   3.1   3.1   3.0   3.0   3.0   3.0   3.1
3.0   3.0   3.1   3.0   3.0   3.0   3.0   3.1   3.1   3.0
  95.  *   3.1   3.0   3.0   3.1   3.1   3.0   3.0   3.0   3.0   3.1
3.1   3.0   3.1   3.0   3.0   3.0   3.0   3.1   3.1   3.0
 100.  *   3.1   3.0   3.0   3.1   3.1   3.0   3.0   3.0   3.0   3.1
3.1   3.0   3.1   3.0   3.0   3.0   3.0   3.1   3.1   3.0
 105.  *   3.1   3.0   3.0   3.1   3.1   3.0   3.0   3.0   3.0   3.1
3.1   3.0   3.1   3.0   3.0   3.0   3.0   3.1   3.1   3.0
 110.  *   3.1   3.0   3.0   3.2   3.1   3.0   3.0   3.0   3.0   3.1
3.1   3.0   3.1   3.0   3.0   3.0   3.0   3.1   3.1   3.0
 115.  *   3.1   3.0   3.0   3.2   3.1   3.0   3.0   3.0   3.0   3.1
3.1   3.0   3.1   3.0   3.0   3.0   3.0   3.1   3.1   3.0
 120.  *   3.1   3.0   3.0   3.1   3.1   3.0   3.0   3.0   3.0   3.1
3.1   3.0   3.1   3.0   3.0   3.0   3.0   3.1   3.1   3.0
 125.  *   3.1   3.0   3.0   3.1   3.1   3.0   3.0   3.0   3.0   3.1
3.1   3.0   3.1   3.0   3.0   3.0   3.0   3.1   3.1   3.0
```

```
 130.  *   3.1   3.0   3.0   3.1   3.1   3.0   3.0   3.0   3.0   3.1
3.1   3.0   3.1   3.0   3.0   3.0   3.0   3.1   3.1   3.0
 135.  *   3.1   3.0   3.0   3.1   3.1   3.0   3.0   3.0   3.0   3.1
3.1   3.0   3.1   3.0   3.0   3.0   3.0   3.1   3.1   3.0
 140.  *   3.1   3.0   3.0   3.1   3.1   3.0   3.0   3.0   3.0   3.1
3.1   3.0   3.1   3.0   3.0   3.0   3.0   3.1   3.1   3.0
 145.  *   3.1   3.0   3.0   3.1   3.1   3.0   3.0   3.0   3.0   3.1
3.1   3.0   3.1   3.0   3.0   3.0   3.0   3.1   3.1   3.0
 150.  *   3.1   3.0   3.0   3.1   3.1   3.0   3.0   3.0   3.0   3.1
3.1   3.0   3.1   3.0   3.0   3.0   3.0   3.1   3.1   3.0
 155.  *   3.1   3.0   3.0   3.2   3.1   3.0   3.0   3.0   3.0   3.1
3.1   3.0   3.1   3.0   3.0   3.0   3.0   3.1   3.1   3.0
 160.  *   3.1   3.0   3.0   3.2   3.1   3.0   3.0   3.0   3.0   3.0
3.1   3.0   3.1   3.0   3.0   3.0   3.0   3.1   3.1   3.0
 165.  *   3.1   3.0   3.0   3.2   3.1   3.0   3.0   3.0   3.0   3.0
3.1   3.0   3.1   3.0   3.0   3.0   3.0   3.1   3.1   3.0
 170.  *   3.1   3.0   3.0   3.2   3.1   3.0   3.0   3.0   3.0   3.1
3.1   3.0   3.1   3.0   3.0   3.0   3.0   3.0   3.1   3.0
 175.  *   3.1   3.0   3.0   3.2   3.1   3.0   3.0   3.0   3.0   3.0
3.1   3.0   3.1   3.0   3.0   3.0   3.0   3.0   3.1   3.0
 180.  *   3.1   3.0   3.0   3.2   3.1   3.0   3.0   3.0   3.0   3.0
3.1   3.0   3.1   3.0   3.0   3.0   3.0   3.0   3.1   3.0
 185.  *   3.1   3.0   3.0   3.1   3.1   3.0   3.0   3.0   3.0   3.0
3.1   3.0   3.1   3.0   3.0   3.0   3.1   3.0   3.1   3.0
 190.  *   3.0   3.1   3.0   3.1   3.0   3.1   3.0   3.0   3.1   3.0
3.1   3.0   3.0   3.1   3.0   3.0   3.1   3.0   3.1   3.0
 195.  *   3.0   3.1   3.0   3.1   3.0   3.1   3.0   3.0   3.1   3.0
3.1   3.0   3.0   3.1   3.0   3.0   3.1   3.0   3.1   3.0
 200.  *   3.0   3.1   3.0   3.1   3.0   3.1   3.0   3.0   3.1   3.0
3.1   3.0   3.0   3.1   3.0   3.0   3.1   3.0   3.1   3.0
 205.  *   3.0   3.0   3.1   3.1   3.0   3.0   3.0   3.0   3.1   3.0
3.1   3.0   3.0   3.0   3.0   3.0   3.1   3.0   3.1   3.0
1
```



```
      JOB: Santolina                                                RUN: 2-6
Broadway and RioB/DennisC

 WIND  * CONCENTRATION
 ANGLE *      (PPM)
 (DEGR)* REC1  REC2  REC3  REC4  REC5  REC6  REC7  REC8  REC9  REC10
REC11 REC12 REC13 REC14 REC15 REC16 REC17 REC18 REC19 REC20
 ------*-------------------------------------------------------------------
-------------------------------------------------------
 210.  *   3.0   3.0   3.1   3.1   3.0   3.0   3.0   3.0   3.1   3.0
3.1   3.0   3.0   3.0   3.0   3.0   3.1   3.0   3.1   3.0
 215.  *   3.0   3.0   3.1   3.1   3.0   3.0   3.0   3.0   3.1   3.0
3.1   3.0   3.0   3.0   3.0   3.0   3.1   3.0   3.1   3.0
 220.  *   3.0   3.0   3.1   3.1   3.0   3.0   3.0   3.0   3.1   3.0
3.1   3.0   3.0   3.0   3.0   3.0   3.1   3.0   3.1   3.0
 225.  *   3.0   3.0   3.1   3.1   3.0   3.0   3.0   3.0   3.1   3.0
3.1   3.0   3.0   3.0   3.0   3.0   3.1   3.0   3.1   3.0
 230.  *   3.0   3.0   3.1   3.1   3.0   3.0   3.0   3.0   3.1   3.0
3.1   3.0   3.0   3.0   3.0   3.0   3.1   3.0   3.1   3.0
```

```
 235.  *   3.0   3.0   3.1   3.1   3.0   3.0   3.0   3.0   3.1   3.0
3.1   3.0   3.0   3.0   3.0   3.0   3.1   3.0   3.1   3.0
 240.  *   3.0   3.0   3.1   3.1   3.0   3.0   3.0   3.0   3.1   3.0
3.1   3.0   3.0   3.0   3.0   3.0   3.1   3.0   3.1   3.0
 245.  *   3.0   3.0   3.0   3.1   3.0   3.0   3.0   3.0   3.0   3.0
3.1   3.0   3.0   3.0   3.0   3.0   3.0   3.0   3.1   3.0
 250.  *   3.0   3.0   3.1   3.1   3.0   3.0   3.0   3.0   3.0   3.0
3.1   3.0   3.0   3.0   3.0   3.0   3.0   3.0   3.1   3.0
 255.  *   3.0   3.0   3.1   3.1   3.0   3.0   3.0   3.0   3.0   3.0
3.1   3.0   3.0   3.0   3.0   3.0   3.0   3.0   3.1   3.0
 260.  *   3.0   3.0   3.1   3.1   3.0   3.0   3.0   3.0   3.0   3.0
3.1   3.0   3.0   3.0   3.0   3.0   3.0   3.0   3.1   3.0
 265.  *   3.0   3.0   3.2   3.1   3.0   3.0   3.0   3.0   3.1   3.0
3.1   3.0   3.0   3.0   3.0   3.0   3.1   3.0   3.1   3.0
 270.  *   3.1   3.0   3.1   3.1   3.0   3.0   3.0   3.0   3.1   3.0
3.1   3.0   3.0   3.0   3.0   3.0   3.1   3.0   3.1   3.0
 275.  *   3.1   3.0   3.1   3.1   3.0   3.0   3.0   3.0   3.1   3.0
3.1   3.1   3.0   3.0   3.0   3.0   3.1   3.0   3.1   3.1
 280.  *   3.1   3.0   3.0   3.0   3.0   3.0   3.0   3.0   3.0   3.0
3.0   3.1   3.0   3.0   3.1   3.0   3.0   3.0   3.0   3.1
 285.  *   3.1   3.0   3.0   3.0   3.0   3.0   3.0   3.0   3.0   3.0
3.0   3.1   3.0   3.0   3.1   3.0   3.0   3.0   3.0   3.1
 290.  *   3.1   3.0   3.0   3.0   3.0   3.0   3.0   3.0   3.0   3.0
3.0   3.1   3.0   3.0   3.1   3.0   3.0   3.0   3.0   3.1
 295.  *   3.1   3.0   3.0   3.0   3.0   3.0   3.0   3.0   3.0   3.0
3.0   3.1   3.0   3.0   3.1   3.0   3.0   3.0   3.0   3.1
 300.  *   3.1   3.0   3.1   3.0   3.0   3.0   3.0   3.0   3.1   3.0
3.0   3.1   3.0   3.0   3.1   3.0   3.1   3.0   3.0   3.1
 305.  *   3.1   3.0   3.1   3.0   3.0   3.0   3.0   3.0   3.1   3.0
3.0   3.1   3.0   3.0   3.1   3.0   3.1   3.0   3.0   3.1
 310.  *   3.1   3.0   3.1   3.0   3.0   3.0   3.0   3.0   3.1   3.0
3.0   3.1   3.0   3.0   3.0   3.0   3.1   3.0   3.0   3.1
 315.  *   3.1   3.0   3.1   3.0   3.0   3.0   3.0   3.0   3.1   3.0
3.0   3.1   3.0   3.0   3.0   3.0   3.1   3.0   3.0   3.1
 320.  *   3.1   3.0   3.1   3.0   3.0   3.0   3.0   3.0   3.1   3.0
3.0   3.1   3.0   3.0   3.0   3.0   3.1   3.0   3.0   3.1
 325.  *   3.0   3.0   3.1   3.0   3.0   3.0   3.0   3.0   3.1   3.0
3.0   3.0   3.0   3.0   3.0   3.0   3.1   3.0   3.0   3.0
 330.  *   3.0   3.0   3.1   3.0   3.0   3.0   3.0   3.0   3.1   3.0
3.0   3.0   3.0   3.0   3.0   3.0   3.1   3.0   3.0   3.0
 335.  *   3.0   3.0   3.1   3.0   3.0   3.0   3.0   3.0   3.1   3.0
3.0   3.0   3.0   3.0   3.0   3.0   3.1   3.0   3.0   3.0
 340.  *   3.0   3.0   3.1   3.0   3.0   3.0   3.0   3.0   3.1   3.0
3.0   3.0   3.0   3.0   3.0   3.0   3.1   3.0   3.0   3.0
 345.  *   3.0   3.0   3.1   3.0   3.0   3.0   3.0   3.0   3.1   3.0
3.0   3.0   3.0   3.0   3.0   3.0   3.1   3.0   3.0   3.0
 350.  *   3.0   3.0   3.1   3.0   3.0   3.0   3.0   3.0   3.1   3.0
3.0   3.0   3.0   3.0   3.0   3.0   3.1   3.0   3.0   3.0
 355.  *   3.0   3.0   3.1   3.0   3.0   3.0   3.0   3.0   3.1   3.0
3.0   3.0   3.0   3.0   3.0   3.0   3.1   3.0   3.0   3.0
 360.  *   3.1   3.0   3.1   3.0   3.1   3.0   3.0   3.0   3.1   3.0
3.0   3.0   3.1   3.0   3.0   3.0   3.1   3.0   3.0   3.0
 -------*-------------------------------------------------------------------
-------------------------------------------------------
```

```
 MAX   *   3.2   3.1   3.2   3.2   3.1   3.1   3.1   3.0   3.1   3.1
3.1   3.1   3.1   3.1   3.1   3.0   3.1   3.1   3.1   3.1
 DEGR. *   10    55   265   110     0   190    55     0     0     5    95
45     0   190    55     0     0     5    90    40

 THE HIGHEST CONCENTRATION IS    3.20 PPM AT   10 DEGREES FROM REC1 .
1
```



```
      JOB: Santolina                                          RUN: 2-6
Broadway and RioB/DennisC

      RECEPTOR - LINK MATRIX FOR THE ANGLE PRODUCING
      THE MAXIMUM CONCENTRATION FOR EACH RECEPTOR

          *    CO/LINK  (PPM)
          *    ANGLE (DEGREES)
          *  REC1  REC2  REC3  REC4  REC5  REC6  REC7  REC8  REC9  REC10
REC11 REC12 REC13 REC14 REC15 REC16 REC17 REC18 REC19 REC20
   LINK # *    10    55   265   110     0   190    55     0     0     5
95    45     0   190    55     0     0     5    90    40
   -------*-------------------------------------------------------------
-------------------------------------------------------------
       1  *   0.0   0.0   0.0   0.0   0.0   0.0   0.0   0.0   0.0   0.0
0.0   0.0   0.0   0.0   0.0   0.0   0.0   0.0   0.0   0.0
       2  *   0.0   0.1   0.0   0.0   0.0   0.0   0.1   0.0   0.0   0.0
0.0   0.0   0.0   0.0   0.1   0.0   0.0   0.0   0.0   0.0
       3  *   0.0   0.0   0.0   0.0   0.0   0.0   0.0   0.0   0.0   0.0
0.0   0.0   0.0   0.0   0.0   0.0   0.0   0.0   0.0   0.0
       4  *   0.0   0.0   0.0   0.0   0.0   0.0   0.0   0.0   0.0   0.0
0.0   0.0   0.0   0.0   0.0   0.0   0.0   0.0   0.0   0.0
       5  *   0.0   0.0   0.1   0.1   0.0   0.0   0.0   0.0   0.0   0.0
0.1   0.0   0.0   0.0   0.0   0.0   0.0   0.0   0.1   0.0
       6  *   0.0   0.0   0.0   0.0   0.0   0.0   0.0   0.0   0.0   0.0
0.0   0.0   0.0   0.0   0.0   0.0   0.0   0.0   0.0   0.0
       7  *   0.0   0.0   0.0   0.0   0.0   0.1   0.0   0.0   0.0   0.0
0.0   0.0   0.0   0.1   0.0   0.0   0.0   0.0   0.0   0.0
       8  *   0.0   0.0   0.1   0.0   0.0   0.0   0.0   0.0   0.1   0.0
0.0   0.0   0.0   0.0   0.0   0.0   0.1   0.0   0.0   0.0
       9  *   0.0   0.0   0.0   0.0   0.0   0.0   0.0   0.0   0.0   0.0
0.0   0.0   0.0   0.0   0.0   0.0   0.0   0.0   0.0   0.0
      10  *   0.1   0.0   0.0   0.1   0.0   0.0   0.0   0.0   0.0   0.1
0.0   0.0   0.0   0.0   0.0   0.0   0.0   0.1   0.0   0.0
      11  *   0.1   0.0   0.0   0.0   0.1   0.0   0.0   0.0   0.0   0.0
0.0   0.0   0.1   0.0   0.0   0.0   0.0   0.0   0.0   0.0
      12  *   0.0   0.0   0.0   0.0   0.0   0.0   0.0   0.0   0.0   0.0
0.0   0.0   0.0   0.0   0.0   0.0   0.0   0.0   0.0   0.0
      13  *   0.0   0.0   0.0   0.0   0.0   0.0   0.0   0.0   0.0   0.0
0.0   0.0   0.0   0.0   0.0   0.0   0.0   0.0   0.0   0.0
      14  *   0.0   0.0   0.0   0.0   0.0   0.0   0.0   0.0   0.0   0.0
0.0   0.0   0.0   0.0   0.0   0.0   0.0   0.0   0.0   0.0
      15  *   0.0   0.0   0.0   0.0   0.0   0.0   0.0   0.0   0.0   0.0
0.0   0.1   0.0   0.0   0.0   0.0   0.0   0.0   0.0   0.1
```

```
      16  *   0.0   0.0   0.0   0.0   0.0   0.0   0.0   0.0   0.0   0.0
0.0   0.0   0.0   0.0   0.0   0.0   0.0   0.0   0.0   0.0
      17  *   0.0   0.0   0.0   0.0   0.0   0.0   0.0   0.0   0.0   0.0
0.0   0.0   0.0   0.0   0.0   0.0   0.0   0.0   0.0   0.0
      18  *   0.0   0.0   0.0   0.0   0.0   0.0   0.0   0.0   0.0   0.0
0.0   0.0   0.0   0.0   0.0   0.0   0.0   0.0   0.0   0.0
      19  *   0.0   0.0   0.0   0.0   0.0   0.0   0.0   0.0   0.0   0.0
0.0   0.0   0.0   0.0   0.0   0.0   0.0   0.0   0.0   0.0
      20  *   0.0   0.0   0.0   0.0   0.0   0.0   0.0   0.0   0.0   0.0
0.0   0.0   0.0   0.0   0.0   0.0   0.0   0.0   0.0   0.0
      21  *   0.0   0.0   0.0   0.0   0.0   0.0   0.0   0.0   0.0   0.0
0.0   0.0   0.0   0.0   0.0   0.0   0.0   0.0   0.0   0.0
      22  *   0.0   0.0   0.0   0.0   0.0   0.0   0.0   0.0   0.0   0.0
0.0   0.0   0.0   0.0   0.0   0.0   0.0   0.0   0.0   0.0
      23  *   0.0   0.0   0.0   0.0   0.0   0.0   0.0   0.0   0.0   0.0
0.0   0.0   0.0   0.0   0.0   0.0   0.0   0.0   0.0   0.0
      24  *   0.0   0.0   0.0   0.0   0.0   0.0   0.0   0.0   0.0   0.0
0.0   0.0   0.0   0.0   0.0   0.0   0.0   0.0   0.0   0.0

 RUN ENDED ON 01/01/05 AT 18:38
```

Atrisco Vista/I-40 Frontage/Central Intersection: Santolina Scenario

Lane Group	EBL	EBT	EBR	WBL	WBT	WBR	NBL	NBT	NBR	SBL	SBT	SBR
Lane Configurations												
Traffic Volume (vph)	165	317	302	755	194	414	89	1768	992	417	1351	37
Future Volume (vph)	165	317	302	755	194	414	89	1768	992	417	1351	37
Ideal Flow (vphpl)	1900	1900	1900	1900	1900	1900	1900	1900	1900	1900	1900	1900
Storage Length (ft)	0		250	0		0	250		250	250		250
Storage Lanes	1		1	3		1	1		2	2		1
Taper Length (ft)	25			25			25			25		
Lane Util. Factor	1.00	0.95	1.00	0.94	0.95	1.00	1.00	0.91	0.88	0.97	0.91	1.00
Frt			0.850			0.850			0.850			0.850
Flt Protected	0.950			0.950			0.950			0.950		
Satd. Flow (prot)	1770	3539	1583	4990	3539	1583	1770	5085	2787	3433	5085	1583
Flt Permitted	0.950			0.950			0.950			0.950		
Satd. Flow (perm)	1770	3539	1583	4990	3539	1583	1770	5085	2787	3433	5085	1583
Right Turn on Red			Yes			Yes			Yes			Yes
Satd. Flow (RTOR)			50			87			50			50
Link Speed (mph)		30			30			30			30	
Link Distance (ft)		4702			7598			2652			730	
Travel Time (s)		106.9			172.7			60.3			16.6	
Peak Hour Factor	0.92	0.92	0.92	0.92	0.92	0.92	0.92	0.92	0.92	0.92	0.92	0.92
Adj. Flow (vph)	179	345	328	821	211	450	97	1922	1078	453	1468	40
Shared Lane Traffic (%)												
Lane Group Flow (vph)	179	345	328	821	211	450	97	1922	1078	453	1468	40
Enter Blocked Intersection	No	No	No	No	No	No	No	No	No	No	No	No
Lane Alignment	Left	Left	Right	Left	Left	Right	Left	Left	Right	Left	Left	Right
Median Width(ft)		36			36			24			24	
Link Offset(ft)		0			0			0			0	
Crosswalk Width(ft)		16			16			16			16	
Two way Left Turn Lane												
Headway Factor	1.00	1.00	1.00	1.00	1.00	1.00	1.00	1.00	1.00	1.00	1.00	1.00
Turning Speed (mph)	15		9	15		9	15		9	15		9
Number of Detectors	1	2	1	1	2	1	1	2	1	1	2	1
Detector Template	Left	Thru	Right	Left	Thru	Right	Left	Thru	Right	Left	Thru	Right
Leading Detector (ft)	20	100	20	20	100	20	20	100	20	20	100	20
Trailing Detector (ft)	0	0	0	0	0	0	0	0	0	0	0	0
Detector 1 Position(ft)	0	0	0	0	0	0	0	0	0	0	0	0
Detector 1 Size(ft)	20	6	20	20	6	20	20	6	20	20	6	20
Detector 1 Type	Cl+Ex	Cl+Ex	Cl+Ex	Cl+Ex	Cl+Ex	Cl+Ex	Cl+Ex	Cl+Ex	Cl+Ex	Cl+Ex	Cl+Ex	Cl+Ex
Detector 1 Channel												
Detector 1 Extend (s)	0.0	0.0	0.0	0.0	0.0	0.0	0.0	0.0	0.0	0.0	0.0	0.0
Detector 1 Queue (s)	0.0	0.0	0.0	0.0	0.0	0.0	0.0	0.0	0.0	0.0	0.0	0.0
Detector 1 Delay (s)	0.0	0.0	0.0	0.0	0.0	0.0	0.0	0.0	0.0	0.0	0.0	0.0
Detector 2 Position(ft)		94			94			94			94	
Detector 2 Size(ft)		6			6			6			6	
Detector 2 Type		Cl+Ex			Cl+Ex			Cl+Ex			Cl+Ex	
Detector 2 Channel												
Detector 2 Extend (s)		0.0			0.0			0.0			0.0	
Turn Type	Prot	NA	pm+ov	Prot	NA	pm+ov	Prot	NA	pm+ov	Prot	NA	pm+ov
Protected Phases	7	4	5	3	8	1	5	2	3	1	6	7
Permitted Phases			4			8			2			6

Lane Group	EBL	EBT	EBR	WBL	WBT	WBR	NBL	NBT	NBR	SBL	SBT	SBR
Detector Phase	7	4	5	3	8	1	5	2	3	1	6	7
Switch Phase												
Minimum Initial (s)	4.0	4.0	4.0	4.0	4.0	4.0	4.0	4.0	4.0	4.0	4.0	4.0
Minimum Split (s)	8.0	20.0	8.0	8.0	20.0	8.0	8.0	20.0	8.0	8.0	20.0	8.0
Total Split (s)	23.0	20.0	20.0	23.0	20.0	19.0	20.0	48.0	23.0	19.0	47.0	23.0
Total Split (%)	20.9%	18.2%	18.2%	20.9%	18.2%	17.3%	18.2%	43.6%	20.9%	17.3%	42.7%	20.9%
Maximum Green (s)	19.0	16.0	16.0	19.0	16.0	15.0	16.0	44.0	19.0	15.0	43.0	19.0
Yellow Time (s)	3.5	3.5	3.5	3.5	3.5	3.5	3.5	3.5	3.5	3.5	3.5	3.5
All-Red Time (s)	0.5	0.5	0.5	0.5	0.5	0.5	0.5	0.5	0.5	0.5	0.5	0.5
Lost Time Adjust (s)	0.0	0.0	0.0	0.0	0.0	0.0	0.0	0.0	0.0	0.0	0.0	0.0
Total Lost Time (s)	4.0	4.0	4.0	4.0	4.0	4.0	4.0	4.0	4.0	4.0	4.0	4.0
Lead/Lag	Lead	Lag	Lead	Lead	Lag	Lead	Lead	Lag	Lead	Lead	Lag	Lead
Lead-Lag Optimize?	Yes	Yes	Yes	Yes	Yes	Yes	Yes	Yes	Yes	Yes	Yes	Yes
Vehicle Extension (s)	3.0	3.0	3.0	3.0	3.0	3.0	3.0	3.0	3.0	3.0	3.0	3.0
Recall Mode	None	None	None	None	None	None	None	Max	None	None	None	None
Walk Time (s)		5.0			5.0			5.0			5.0	
Flash Dont Walk (s)		11.0			11.0			11.0			11.0	
Pedestrian Calls (#/hr)		0			0			0			0	
Act Effct Green (s)	15.5	14.7	30.0	19.0	18.1	37.1	11.3	44.0	67.0	15.0	47.7	67.3
Actuated g/C Ratio	0.14	0.14	0.28	0.17	0.17	0.34	0.10	0.40	0.62	0.14	0.44	0.62
v/c Ratio	0.71	0.72	0.69	0.94	0.36	0.75	0.53	0.93	0.62	0.96	0.66	0.04
Control Delay	59.8	54.4	37.5	64.2	43.0	35.3	56.2	40.9	14.4	79.2	26.5	2.0
Queue Delay	0.0	0.0	0.0	0.0	0.0	0.0	0.0	0.0	0.0	0.0	0.0	0.0
Total Delay	59.8	54.4	37.5	64.2	43.0	35.3	56.2	40.9	14.4	79.2	26.5	2.0
LOS	E	D	D	E	D	D	E	D	B	E	C	A
Approach Delay		49.0			52.4			32.2			38.2	
Approach LOS		D			D			C			D	

Intersection Summary	
Area Type: Other	
Cycle Length: 110	
Actuated Cycle Length: 108.7	
Natural Cycle: 90	
Control Type: Actuated-Uncoordinated	
Maximum v/c Ratio: 0.96	
Intersection Signal Delay: 39.8	Intersection LOS: D
Intersection Capacity Utilization 82.5%	ICU Level of Service E
Analysis Period (min) 15	

Splits and Phases: 6: ATRISCO VISTA & Frontage

2040 PM Build

Atrisco Vista/I-40 Frontage/Central

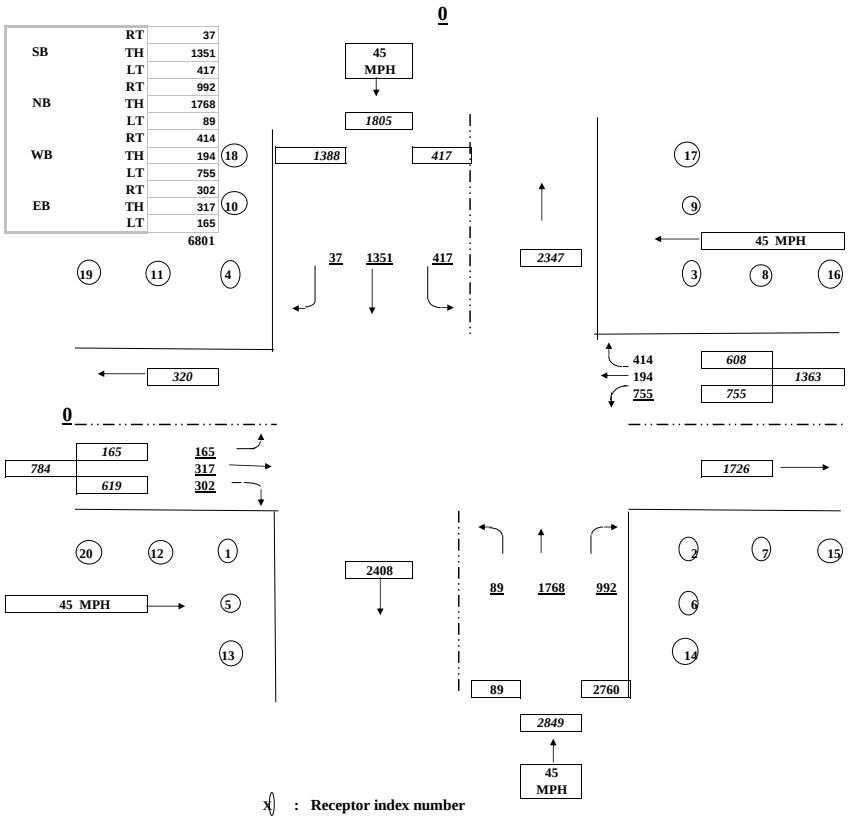

x() : Receptor index number

: Approaching speed

G:\Santolina AQIA\Final DRaft\atrisco vista-central\[Copy of 46.xls]A

INTERSECTION CONFIGURATION , SIGNAL SETTING, AND EMISSION FACTOR

	EBL	EBT	EBR	WBL	WBT	WBR	NBL	NBT	NBR	SBL	SBT	SBR
LeftTurn Code*	1			1			1			1		
No. of Lanes	1	2	1	3	2	1	1	3	2	2	3	1
Lane Width (ft)	12	12	12	12	12	12	12	12	12	12	12	12
Median (ft)		4			4			4			4	
Offset Receptors and Lanes		0			0			0			0	
Cycle Length (sec)	60	60	60	60	60	60	60	60	60	60	60	60
1st Permitted Phase (inc yellow)	3.5	3.5	3.5	3.5	3.5	3.5	3.5	3.5	3.5	3.5	3.5	3.5
2nd Permitted Phase (inc yellow)	4	16	4	6	18	24	4	28	6	24	48	4
3rd Permitted Phase (inc yellow)												
Red Time (sec)	53	41	53	51	39	33	53	29	51	33	9	53
Lost Time (Incld'd. above)	0	0	0	0	0	0	0	0	0	0	0	0
Saturation Flow Rate (vphpl)	1900	1900	1900	1900	1900	1900	1900	1900	1900	1900	1900	1900
Speed (mph)		45			45			45			45	

* Left Turn Code : 1 - Exclusive left 2 - Left shared with through (IF 2 WBL should not be counted as a lane i.e. all LT lanes should be tallied under through)

Quee Links 800
Freeflow Links 1000

CALCULATION OF RECEPTOR'S COORDINATES

	COORDINATES			
RECEPTOR	X	Y	X	Y
#1			-60	-60
#2			84	-60
#3			66	72
#4			-78	48
#5			-60	-140
#6			84	-140
#7			164	-60
#8			146	72
#9			66	152
#10			-78	128
#11			-158	48
#12			-140	-60
#13			-60	-260
#14			84	-260
#15			284	-60
#16			266	72
#17			66	272
#18			-78	248
#19			-278	48
#20			-260	-60

Number of Links 24

CALCULATION OF LINK COORDINATES (w/ widths and lanes)

LINK	X1	Y1	X2	Y2	Width	Lanes
EB Approach	-1000	-20	0	-20	56	3
EB Departure	0	-32	1000	-32	44	2
EB Left	-1000	-2	0	-2	32	1
WB Approach	1000	32	0	32	56	3
WB Departure	0	20	-1000	20	44	2
WB Left	1000	2	0	2	56	3
NB Approach	26	-1000	26	0	80	5
NB Departure	32	0	32	1000	56	3
NB Left	2	-1000	2	0	32	1
SB Approach	-32	1000	-32	0	68	4
SB Departure	-26	0	-26	-1000	56	3
SB Left	-2	1000	-2	0	44	2
EB Left Queue	-50	-2	-850	-2	12	1
EB Through Queu	-50	-20	-850	-20	24	2
EB Right Queue	-50	-38	-850	-38	12	1
WB Left Queue	56	2	856	2	36	3
WB Through Quei	56	32	856	32	24	2
WB Right Queue	56	50	856	50	12	1
NB Left Queue	2	-50	2	-850	12	1
NB Through Queu	26	-50	26	-850	36	3
NB Right Queue	56	-50	56	-850	24	2
SB Left Queue	-2	38	-2	838	24	2
SB Through Queu	-32	38	-32	838	36	3
SB Right Queue	-56	38	-56	838	12	1

```
1                    CAL3QHC (93157)
                     IBM-PC VERSION (2.01)


                     RUN NAME: 46.DAT

                     RUN BEGIN ON 01/01/05 AT 18:39

                     CAL3QHC: LINE SOURCE DISPERSION MODEL - VERSION 2.0,
JANUARY 1992

      JOB: Santolina                                            RUN: 4-6
Atrisco Vista/I-40 Frontage/Central

       SITE & METEOROLOGICAL VARIABLES
       -------------------------------
       VS =   0.0 CM/S       VD =   0.0 CM/S       Z0 = 175. CM
        U =  1.0 M/S         CLAS =   4  (D)     ATIM =  60. MINUTES
MIXH =  1000. M   AMB =  3.0 PPM

       LINK VARIABLES
       --------------
         LINK DESCRIPTION     *         LINK COORDINATES (FT)          *
LENGTH  BRG TYPE   VPH    EF      H   W    V/C QUEUE
                              *   X1        Y1        X2        Y2     *
(FT)  (DEG)            (G/MI)  (FT) (FT)       (VEH)
      ------------------------*----------------------------------------*-
-------------------------------------------------------------
       1. EB A                *  -1000.0     -20.0       0.0     -20.0 *
1000.    90. AG    619.   0.9   0.0 56.0
       2. EB D                *      0.0     -32.0    1000.0     -32.0 *
1000.    90. AG   1726.   0.9   0.0 44.0
       3. EB L                *  -1000.0      -2.0       0.0      -2.0 *
1000.    90. AG    165.   0.9   0.0 32.0
       4. WB A                *   1000.0      32.0       0.0      32.0 *
1000.   270. AG    608.   0.9   0.0 56.0
       5. WB D                *      0.0      20.0   -1000.0      20.0 *
1000.   270. AG    320.   0.9   0.0 44.0
       6. WB L                *   1000.0       2.0       0.0       2.0 *
1000.   270. AG    755.   0.9   0.0 56.0
       7. NB A                *     26.0   -1000.0      26.0       0.0 *
1000.   360. AG   2760.   0.9   0.0 80.0
       8. NB D                *     32.0       0.0      32.0    1000.0 *
1000.   360. AG   2347.   0.9   0.0 56.0
       9. NB L                *      2.0   -1000.0       2.0       0.0 *
1000.   360. AG     89.   0.9   0.0 32.0
      10. SB A                *    -32.0    1000.0     -32.0       0.0 *
1000.   180. AG   1388.   0.9   0.0 68.0
      11. SB D                *    -26.0       0.0     -26.0   -1000.0 *
1000.   180. AG   2408.   0.9   0.0 56.0
      12. SB L                *     -2.0    1000.0      -2.0       0.0 *
1000.   180. AG    417.   0.9   0.0 44.0
      13. EB L Q              *    -50.0      -2.0   -1203.7      -2.3 *
1154.   270. AG     10. 100.0   0.0 12.0 2.62  58.6
```

```
      14. EB T Q              *    -50.0     -20.0     -85.4     -20.0 *
35.   270. AG     15. 100.0   0.0 24.0 0.36   1.8
      15. EB R Q              *    -50.0     -38.0   -2676.5     -38.6 *
2627.   270. AG     10. 100.0   0.0 12.0 4.79 133.4
      16. WB L Q              *     56.0       2.0    1465.9       2.2 *
1410.    90. AG     29. 100.0   0.0 36.0 1.99  71.6
      17. WB T Q              *     56.0      32.0      76.7      32.0 *
21.    90. AG     15. 100.0   0.0 24.0 0.19   1.1
      18. WB R  Q             *     56.0      50.0     130.7      50.0 *
75.    90. AG      6. 100.0   0.0 12.0 0.59   3.8
      19. NB L  Q             *      2.0     -50.0       2.0    -386.7 *
337.   180. AG     10. 100.0   0.0 24.0 1.41  17.1
      20. NB T  Q             *     26.0     -50.0      26.0    -143.4 *
93.   180. AG     16. 100.0   0.0 36.0 0.72   4.7
      21. NB R  Q             *     56.0     -50.0      56.0   -4046.6 *
3997.   180. AG     19. 100.0   0.0 12.0 3.94 203.0
      22. SB L  Q             *     -2.0      38.0      -2.0      75.5 *
38.   360. AG     12. 100.0   0.0 24.0 0.30   1.9
      23. SB T  Q             *    -32.0      38.0     -32.0      60.1 *
22.   360. AG      5. 100.0   0.0 36.0 0.31   1.1
      24. SB R  Q             *    -56.0      38.0     -56.0      50.8 *
13.   360. AG     10. 100.0   0.0 12.0 0.59   0.6
1

PAGE  2
      JOB: Santolina                                          RUN: 4-6
Loop Road and Dennis Chavez
       ADDITIONAL QUEUE LINK PARAMETERS
       --------------------------------
         LINK DESCRIPTION     *    CYCLE    RED     CLEARANCE  APPROACH
SATURATION   IDLE   SIGNAL   ARRIVAL
                              *    LENGTH   TIME    LOST TIME    VOL
FLOW RATE   EM FAC   TYPE     RATE
                              *     (SEC)   (SEC)    (SEC)      (VPH)
(VPH)    (gm/hr)
      -------------------------*-----------------------------------------
-------------------------------------
      13. EB L Q              *      60       53       3.0       165
1900       4.20      3        3
      14. EB T Q              *      60       41       3.0       317
1900       4.20      3        3
      15. EB R Q              *      60       53       3.0       302
1900       4.20      3        3
      16. WB L Q              *      60       51       3.0       755
1900       4.20      3        3
      17. WB T Q              *      60       39       3.0       194
1900       4.20      3        3
      18. WB R  Q             *      60       33       3.0       414
1900       4.20      3        3
      19. NB L  Q             *      60       53       3.0        89
1900       4.20      3        3
      20. NB T  Q             *      60       29       3.0      1768
1900       4.20      3        3
```

```
      21. NB R  Q             *      60       51       3.0       992
1900       4.20      3        3
      22. SB L  Q             *      60       33       3.0       417
1900       4.20      3        3
      23. SB T  Q             *      60        9       3.0      1351
1900       4.20      3        3
      24. SB R  Q             *      60       53       3.0        37
1900       4.20      3        3
```

RECEPTOR LOCATIONS

RECEPTOR	COORDINATES (FT) X	Y	Z
1. 1	-60.0	-60.0	5.0
2. 2	84.0	-60.0	5.0
3. 3	66.0	72.0	5.0
4. 4	-78.0	48.0	5.0
5. 5	-60.0	-140.0	5.0
6. 6	84.0	-140.0	5.0
7. 7	164.0	-60.0	5.0
8. 8	146.0	72.0	5.0
9. 9	66.0	152.0	5.0
10. 10	-78.0	128.0	5.0
11. 11	-158.0	48.0	5.0
12. 12	-140.0	-60.0	5.0
13. 13	-60.0	260.0	5.0
14. 14	84.0	-260.0	5.0
15. 15	284.0	-60.0	5.0
16. 16	266.0	72.0	5.0
17. 17	66.0	272.0	5.0
18. 18	-78.0	248.0	5.0
19. 19	-278.0	48.0	5.0
20. 20	-260.0	-60.0	5.0

1

JOB: Santolina RUN: 4-6
Loop Road and Dennis Chavez

MODEL RESULTS

REMARKS : In search of the angle corresponding to the maximum concentration, only the first angle, of the angles with same maximum concentrations, is indicated as maximum.

WIND ANGLE RANGE: 0.-360.

```
 WIND  * CONCENTRATION
 ANGLE *      (PPM)
 (DEGR)* REC1  REC2  REC3  REC4  REC5  REC6  REC7  REC8  REC9  REC10
REC11 REC12 REC13 REC14 REC15 REC16 REC17 REC18 REC19 REC20
```

```
 ------*-------------------------------------------------------------------
-------------------------------------------------------------
   0.  *   3.0   3.1   3.1   3.0   3.0   3.0   3.2   3.0   3.1   3.0
3.0   3.0   3.1   3.0   3.2   3.0   3.1   3.0   3.0   3.0
   5.  *   3.0   3.2   3.1   3.0   3.1   3.0   3.2   3.0   3.1   3.0
3.0   3.0   3.1   3.0   3.2   3.0   3.1   3.0   3.0   3.0
  10.  *   3.0   3.1   3.0   3.1   3.1   3.0   3.1   3.0   3.0   3.1
3.0   3.0   3.1   3.0   3.1   3.0   3.0   3.0   3.0   3.0
  15.  *   3.0   3.1   3.0   3.1   3.1   3.0   3.1   3.0   3.0   3.1
3.0   3.0   3.1   3.0   3.1   3.0   3.0   3.1   3.0   3.0
  20.  *   3.0   3.1   3.0   3.1   3.1   3.0   3.1   3.0   3.0   3.1
3.0   3.0   3.1   3.0   3.1   3.0   3.0   3.1   3.0   3.0
  25.  *   3.0   3.1   3.0   3.0   3.1   3.0   3.1   3.0   3.0   3.0
3.0   3.0   3.1   3.0   3.1   3.0   3.0   3.0   3.0   3.0
  30.  *   3.1   3.2   3.0   3.0   3.1   3.0   3.2   3.0   3.0   3.0
3.0   3.0   3.1   3.0   3.2   3.0   3.0   3.0   3.0   3.0
  35.  *   3.1   3.2   3.0   3.0   3.1   3.0   3.2   3.0   3.0   3.0
3.0   3.0   3.1   3.0   3.2   3.0   3.0   3.0   3.0   3.0
  40.  *   3.1   3.2   3.0   3.0   3.1   3.0   3.2   3.0   3.0   3.0
3.0   3.0   3.1   3.0   3.2   3.0   3.0   3.0   3.0   3.0
  45.  *   3.1   3.2   3.0   3.0   3.1   3.0   3.2   3.0   3.0   3.0
3.0   3.0   3.0   3.0   3.2   3.0   3.0   3.0   3.0   3.0
  50.  *   3.1   3.2   3.0   3.0   3.1   3.0   3.2   3.0   3.0   3.0
3.0   3.0   3.0   3.0   3.2   3.0   3.0   3.0   3.0   3.0
  55.  *   3.1   3.2   3.0   3.0   3.1   3.0   3.2   3.0   3.0   3.0
3.0   3.0   3.0   3.0   3.2   3.0   3.0   3.0   3.0   3.0
  60.  *   3.1   3.2   3.0   3.0   3.1   3.0   3.2   3.0   3.0   3.0
3.0   3.0   3.0   3.0   3.2   3.0   3.0   3.0   3.0   3.0
  65.  *   3.1   3.2   3.0   3.0   3.1   3.0   3.2   3.0   3.0   3.0
3.0   3.0   3.0   3.0   3.2   3.0   3.0   3.0   3.0   3.0
  70.  *   3.2   3.2   3.0   3.0   3.1   3.0   3.2   3.0   3.0   3.0
3.0   3.0   3.0   3.0   3.2   3.0   3.0   3.0   3.0   3.0
  75.  *   3.2   3.2   3.0   3.0   3.1   3.0   3.2   3.0   3.0   3.0
3.0   3.0   3.0   3.0   3.2   3.0   3.0   3.0   3.0   3.0
  80.  *   3.3   3.2   3.0   3.0   3.1   3.0   3.2   3.0   3.0   3.0
3.0   3.0   3.0   3.0   3.2   3.0   3.0   3.0   3.0   3.0
  85.  *   3.3   3.2   3.0   3.0   3.1   3.0   3.2   3.0   3.0   3.0
3.0   3.0   3.0   3.0   3.2   3.0   3.0   3.0   3.0   3.0
  90.  *   3.1   3.1   3.0   3.1   3.1   3.0   3.1   3.0   3.0   3.0
3.0   3.0   3.0   3.0   3.1   3.0   3.0   3.0   3.0   3.0
  95.  *   3.1   3.0   3.1   3.1   3.1   3.0   3.0   3.1   3.0   3.0
3.0   3.0   3.0   3.0   3.0   3.1   3.0   3.0   3.0   3.0
 100.  *   3.1   3.0   3.1   3.1   3.1   3.0   3.0   3.1   3.0   3.0
3.0   3.0   3.0   3.0   3.0   3.1   3.0   3.0   3.0   3.0
 105.  *   3.1   3.0   3.1   3.1   3.1   3.0   3.0   3.1   3.0   3.0
3.0   3.0   3.0   3.0   3.0   3.1   3.0   3.0   3.0   3.0
 110.  *   3.1   3.0   3.1   3.0   3.1   3.0   3.0   3.1   3.0   3.0
3.0   3.0   3.0   3.0   3.0   3.1   3.0   3.0   3.0   3.0
 115.  *   3.1   3.0   3.1   3.0   3.1   3.0   3.0   3.1   3.0   3.0
3.0   3.0   3.0   3.0   3.0   3.1   3.0   3.0   3.0   3.0
 120.  *   3.2   3.0   3.1   3.0   3.2   3.0   3.0   3.1   3.0   3.0
3.0   3.0   3.0   3.0   3.0   3.1   3.0   3.0   3.0   3.0
 125.  *   3.2   3.0   3.1   3.0   3.2   3.0   3.0   3.1   3.0   3.0
3.0   3.0   3.0   3.0   3.0   3.1   3.0   3.0   3.0   3.0
```

```
 130.  *   3.2   3.0   3.1   3.0   3.2   3.0   3.0   3.1   3.0   3.0
3.0   3.0   3.0   3.0   3.0   3.1   3.0   3.0   3.0   3.0
 135.  *   3.2   3.0   3.1   3.0   3.2   3.0   3.0   3.1   3.0   3.0
3.0   3.0   3.0   3.0   3.0   3.1   3.0   3.0   3.0   3.0
 140.  *   3.2   3.0   3.1   3.0   3.2   3.0   3.0   3.1   3.0   3.0
3.0   3.0   3.1   3.0   3.0   3.1   3.0   3.0   3.0   3.0
 145.  *   3.2   3.0   3.0   3.0   3.2   3.0   3.0   3.0   3.0   3.0
3.0   3.0   3.1   3.0   3.0   3.0   3.0   3.0   3.0   3.0
 150.  *   3.2   3.0   3.0   3.1   3.2   3.0   3.0   3.0   3.0   3.0
3.0   3.0   3.1   3.0   3.0   3.0   3.0   3.0   3.0   3.0
 155.  *   3.2   3.0   3.0   3.2   3.2   3.0   3.0   3.0   3.0   3.0
3.0   3.0   3.1   3.0   3.0   3.0   3.0   3.0   3.0   3.0
 160.  *   3.2   3.0   3.0   3.2   3.2   3.0   3.0   3.0   3.0   3.0
3.0   3.0   3.1   3.0   3.0   3.0   3.0   3.0   3.0   3.0
 165.  *   3.2   3.0   3.0   3.2   3.2   3.0   3.0   3.0   3.0   3.0
3.0   3.0   3.1   3.0   3.0   3.0   3.0   3.0   3.0   3.0
 170.  *   3.2   3.0   3.0   3.1   3.2   3.0   3.0   3.0   3.0   3.0
3.0   3.0   3.1   3.0   3.0   3.0   3.0   3.0   3.0   3.0
 175.  *   3.1   3.0   3.1   3.1   3.1   3.0   3.0   3.0   3.0   3.0
3.0   3.0   3.1   3.0   3.0   3.0   3.0   3.0   3.0   3.0
 180.  *   3.1   3.1   3.1   3.0   3.1   3.1   3.0   3.0   3.0   3.0
3.0   3.0   3.1   3.1   3.0   3.0   3.1   3.0   3.0   3.0
 185.  *   3.1   3.2   3.1   3.0   3.1   3.2   3.0   3.0   3.2   3.0
3.0   3.0   3.0   3.2   3.0   3.0   3.1   3.0   3.0   3.0
 190.  *   3.0   3.2   3.1   3.0   3.0   3.2   3.0   3.0   3.2   3.0
3.0   3.0   3.0   3.2   3.0   3.0   3.1   3.0   3.0   3.0
 195.  *   3.0   3.2   3.1   3.0   3.0   3.2   3.0   3.0   3.1   3.0
3.0   3.0   3.0   3.2   3.0   3.0   3.1   3.0   3.0   3.0
 200.  *   3.0   3.2   3.2   3.0   3.0   3.2   3.0   3.0   3.1   3.0
3.0   3.0   3.0   3.2   3.0   3.0   3.1   3.0   3.0   3.0
 205.  *   3.0   3.2   3.2   3.0   3.0   3.2   3.0   3.0   3.1   3.0
3.0   3.0   3.0   3.2   3.0   3.0   3.1   3.0   3.0   3.0
1
```


JOB: Santolina RUN: 4-6
Loop Road and Dennis Chavez

```
 WIND  * CONCENTRATION
 ANGLE *      (PPM)
 (DEGR)* REC1  REC2  REC3  REC4  REC5  REC6  REC7  REC8  REC9  REC10
REC11 REC12 REC13 REC14 REC15 REC16 REC17 REC18 REC19 REC20
 ------*-------------------------------------------------------------------
-------------------------------------------------------
 210.  *   3.0   3.1   3.1   3.0   3.0   3.1   3.0   3.0   3.1   3.0
3.0   3.0   3.0   3.1   3.0   3.0   3.1   3.0   3.0   3.0
 215.  *   3.0   3.1   3.1   3.0   3.0   3.1   3.0   3.0   3.1   3.0
3.0   3.0   3.0   3.1   3.0   3.0   3.1   3.0   3.0   3.0
 220.  *   3.0   3.1   3.1   3.0   3.0   3.1   3.0   3.0   3.1   3.0
3.0   3.0   3.0   3.1   3.0   3.1   3.1   3.0   3.0   3.0
 225.  *   3.0   3.1   3.1   3.0   3.0   3.1   3.0   3.0   3.1   3.0
3.0   3.0   3.0   3.1   3.0   3.1   3.1   3.0   3.0   3.0
 230.  *   3.0   3.1   3.1   3.0   3.0   3.1   3.0   3.0   3.1   3.0
3.0   3.0   3.0   3.1   3.0   3.1   3.1   3.0   3.0   3.0
```

```
 235.  *   3.0   3.1   3.1   3.0   3.0   3.1   3.0   3.0   3.1   3.0
3.0   3.0   3.0   3.1   3.0   3.1   3.1   3.0   3.0   3.0
 240.  *   3.0   3.1   3.1   3.0   3.0   3.1   3.0   3.0   3.1   3.0
3.0   3.0   3.0   3.1   3.0   3.0   3.1   3.0   3.0   3.0
 245.  *   3.0   3.1   3.1   3.0   3.0   3.1   3.0   3.0   3.1   3.0
3.0   3.0   3.0   3.1   3.0   3.0   3.1   3.0   3.0   3.0
 250.  *   3.0   3.1   3.1   3.0   3.0   3.1   3.0   3.0   3.1   3.0
3.0   3.0   3.0   3.1   3.0   3.0   3.1   3.0   3.0   3.0
 255.  *   3.0   3.1   3.1   3.0   3.0   3.1   3.0   3.0   3.1   3.0
3.0   3.0   3.0   3.1   3.0   3.0   3.1   3.0   3.0   3.0
 260.  *   3.0   3.1   3.1   3.0   3.0   3.1   3.0   3.0   3.1   3.0
3.0   3.0   3.0   3.1   3.0   3.0   3.1   3.0   3.0   3.0
 265.  *   3.0   3.1   3.1   3.0   3.0   3.1   3.0   3.0   3.1   3.0
3.0   3.0   3.0   3.1   3.0   3.0   3.1   3.0   3.0   3.0
 270.  *   3.0   3.1   3.1   3.0   3.0   3.1   3.0   3.0   3.1   3.0
3.0   3.0   3.0   3.1   3.0   3.0   3.1   3.0   3.0   3.0
 275.  *   3.0   3.1   3.1   3.0   3.0   3.1   3.0   3.0   3.1   3.0
3.0   3.0   3.0   3.1   3.1   3.0   3.1   3.0   3.0   3.0
 280.  *   3.0   3.1   3.1   3.0   3.0   3.1   3.1   3.0   3.1   3.0
3.0   3.0   3.0   3.1   3.1   3.0   3.1   3.0   3.0   3.0
 285.  *   3.0   3.1   3.1   3.0   3.0   3.1   3.1   3.0   3.1   3.0
3.0   3.0   3.0   3.1   3.1   3.0   3.1   3.0   3.0   3.0
 290.  *   3.0   3.1   3.1   3.0   3.0   3.1   3.1   3.0   3.1   3.0
3.0   3.0   3.0   3.1   3.1   3.0   3.1   3.0   3.0   3.0
 295.  *   3.0   3.2   3.1   3.0   3.0   3.1   3.1   3.0   3.1   3.0
3.0   3.0   3.0   3.1   3.2   3.0   3.1   3.0   3.0   3.0
 300.  *   3.0   3.2   3.1   3.0   3.0   3.1   3.1   3.0   3.1   3.0
3.0   3.0   3.0   3.1   3.2   3.0   3.1   3.0   3.0   3.0
 305.  *   3.0   3.1   3.1   3.0   3.0   3.1   3.1   3.0   3.1   3.0
3.0   3.0   3.0   3.1   3.2   3.0   3.1   3.0   3.0   3.0
 310.  *   3.0   3.1   3.1   3.0   3.0   3.1   3.1   3.0   3.1   3.0
3.0   3.0   3.0   3.1   3.2   3.0   3.1   3.0   3.0   3.0
 315.  *   3.0   3.1   3.1   3.0   3.0   3.1   3.1   3.0   3.1   3.0
3.0   3.0   3.0   3.1   3.2   3.0   3.1   3.0   3.0   3.0
 320.  *   3.0   3.1   3.1   3.0   3.0   3.1   3.1   3.0   3.1   3.0
3.0   3.0   3.0   3.1   3.2   3.0   3.1   3.0   3.0   3.0
 325.  *   3.0   3.1   3.1   3.0   3.0   3.1   3.2   3.0   3.1   3.0
3.0   3.0   3.0   3.1   3.2   3.0   3.1   3.0   3.0   3.0
 330.  *   3.0   3.1   3.1   3.0   3.0   3.1   3.2   3.0   3.1   3.0
3.0   3.0   3.0   3.1   3.2   3.0   3.1   3.0   3.0   3.0
 335.  *   3.0   3.1   3.1   3.0   3.0   3.1   3.1   3.0   3.1   3.0
3.0   3.0   3.0   3.1   3.1   3.0   3.1   3.0   3.0   3.0
 340.  *   3.0   3.1   3.1   3.0   3.0   3.0   3.1   3.0   3.1   3.0
3.0   3.0   3.0   3.1   3.1   3.0   3.1   3.0   3.0   3.0
 345.  *   3.0   3.1   3.1   3.0   3.0   3.0   3.1   3.0   3.1   3.0
3.0   3.0   3.0   3.1   3.1   3.0   3.1   3.0   3.0   3.0
 350.  *   3.0   3.1   3.1   3.0   3.0   3.0   3.1   3.0   3.1   3.0
3.0   3.0   3.0   3.1   3.1   3.0   3.1   3.0   3.0   3.0
 355.  *   3.0   3.2   3.1   3.0   3.0   3.0   3.2   3.0   3.1   3.0
3.0   3.0   3.1   3.0   3.2   3.0   3.1   3.0   3.0   3.0
 360.  *   3.0   3.1   3.1   3.0   3.0   3.0   3.2   3.0   3.1   3.0
3.0   3.0   3.1   3.0   3.2   3.0   3.1   3.0   3.0   3.0
 -------*-------------------------------------------------------------------
-------------------------------------------------------
```

```
 MAX   *   3.3   3.2   3.2   3.2   3.2   3.2   3.2   3.1   3.2   3.1
3.0   3.0   3.1   3.2   3.2   3.1   3.1   3.1   3.0   3.0
 DEGR. *   80     5   200   155   120   185     0    95   185    10     0
0     0   185     0    95     0    15     0     0

 THE HIGHEST CONCENTRATION IS    3.30 PPM AT   80 DEGREES FROM REC1 .
1
```


JOB: Santolina RUN: 4-6
Loop Road and Dennis Chavez

RECEPTOR - LINK MATRIX FOR THE ANGLE PRODUCING
THE MAXIMUM CONCENTRATION FOR EACH RECEPTOR

```
          *    CO/LINK  (PPM)
          *    ANGLE (DEGREES)
          *  REC1  REC2  REC3  REC4  REC5  REC6  REC7  REC8  REC9  REC10
REC11 REC12 REC13 REC14 REC15 REC16 REC17 REC18 REC19 REC20
   LINK # *    80     5   200   155   120   185     0    95   185    10
0     0     0   185     0    95     0    15     0     0
   -------*-------------------------------------------------------------
-------------------------------------------------------------
       1  *   0.0   0.0   0.0   0.0   0.0   0.0   0.0   0.0   0.0   0.0
0.0   0.0   0.0   0.0   0.0   0.0   0.0   0.0   0.0   0.0
       2  *   0.1   0.1   0.0   0.0   0.0   0.0   0.1   0.0   0.0   0.0
0.0   0.0   0.0   0.0   0.1   0.0   0.0   0.0   0.0   0.0
       3  *   0.0   0.0   0.0   0.0   0.0   0.0   0.0   0.0   0.0   0.0
0.0   0.0   0.0   0.0   0.0   0.0   0.0   0.0   0.0   0.0
       4  *   0.0   0.0   0.0   0.0   0.0   0.0   0.0   0.0   0.0   0.0
0.0   0.0   0.0   0.0   0.0   0.0   0.0   0.0   0.0   0.0
       5  *   0.0   0.0   0.0   0.0   0.0   0.0   0.0   0.0   0.0   0.0
0.0   0.0   0.0   0.0   0.0   0.0   0.0   0.0   0.0   0.0
       6  *   0.0   0.0   0.0   0.0   0.0   0.0   0.0   0.0   0.0   0.0
0.0   0.0   0.0   0.0   0.0   0.0   0.0   0.0   0.0   0.0
       7  *   0.0   0.0   0.1   0.1   0.1   0.1   0.0   0.0   0.1   0.0
0.0   0.0   0.0   0.1   0.0   0.0   0.0   0.0   0.0   0.0
       8  *   0.0   0.0   0.1   0.0   0.0   0.0   0.0   0.0   0.1   0.0
0.0   0.0   0.0   0.0   0.0   0.0   0.1   0.0   0.0   0.0
       9  *   0.0   0.0   0.0   0.0   0.0   0.0   0.0   0.0   0.0   0.0
0.0   0.0   0.0   0.0   0.0   0.0   0.0   0.0   0.0   0.0
      10  *   0.0   0.0   0.0   0.0   0.0   0.0   0.0   0.0   0.0   0.1
0.0   0.0   0.1   0.0   0.0   0.0   0.0   0.1   0.0   0.0
      11  *   0.1   0.0   0.0   0.1   0.1   0.0   0.0   0.0   0.0   0.0
0.0   0.0   0.0   0.0   0.0   0.0   0.0   0.0   0.0   0.0
      12  *   0.0   0.0   0.0   0.0   0.0   0.0   0.0   0.0   0.0   0.0
0.0   0.0   0.0   0.0   0.0   0.0   0.0   0.0   0.0   0.0
      13  *   0.0   0.0   0.0   0.0   0.0   0.0   0.0   0.0   0.0   0.0
0.0   0.0   0.0   0.0   0.0   0.0   0.0   0.0   0.0   0.0
      14  *   0.0   0.0   0.0   0.0   0.0   0.0   0.0   0.0   0.0   0.0
0.0   0.0   0.0   0.0   0.0   0.0   0.0   0.0   0.0   0.0
      15  *   0.0   0.0   0.0   0.0   0.0   0.0   0.0   0.0   0.0   0.0
0.0   0.0   0.0   0.0   0.0   0.0   0.0   0.0   0.0   0.0
```

```
      16  *   0.1   0.1   0.0   0.0   0.0   0.0   0.1   0.1   0.0   0.0
0.0   0.0   0.0   0.0   0.1   0.1   0.0   0.0   0.0   0.0
      17  *   0.0   0.0   0.0   0.0   0.0   0.0   0.0   0.0   0.0   0.0
0.0   0.0   0.0   0.0   0.0   0.0   0.0   0.0   0.0   0.0
      18  *   0.0   0.0   0.0   0.0   0.0   0.0   0.0   0.0   0.0   0.0
0.0   0.0   0.0   0.0   0.0   0.0   0.0   0.0   0.0   0.0
      19  *   0.0   0.0   0.0   0.0   0.0   0.0   0.0   0.0   0.0   0.0
0.0   0.0   0.0   0.0   0.0   0.0   0.0   0.0   0.0   0.0
      20  *   0.0   0.0   0.0   0.0   0.0   0.0   0.0   0.0   0.0   0.0
0.0   0.0   0.0   0.0   0.0   0.0   0.0   0.0   0.0   0.0
      21  *   0.0   0.0   0.0   0.0   0.0   0.1   0.0   0.0   0.0   0.0
0.0   0.0   0.0   0.1   0.0   0.0   0.0   0.0   0.0   0.0
      22  *   0.0   0.0   0.0   0.0   0.0   0.0   0.0   0.0   0.0   0.0
0.0   0.0   0.0   0.0   0.0   0.0   0.0   0.0   0.0   0.0
      23  *   0.0   0.0   0.0   0.0   0.0   0.0   0.0   0.0   0.0   0.0
0.0   0.0   0.0   0.0   0.0   0.0   0.0   0.0   0.0   0.0
      24  *   0.0   0.0   0.0   0.0   0.0   0.0   0.0   0.0   0.0   0.0
0.0   0.0   0.0   0.0   0.0   0.0   0.0   0.0   0.0   0.0

 RUN ENDED ON 01/01/05 AT 18:39
```

Loop Road-Dennis Chavez Intersection: Santolina Scenario

Lane Group	EBL	EBT	EBR	WBL	WBT	WBR	NBL	NBT	NBR	SBL	SBT	SBR
Lane Configurations												
Traffic Volume (vph)	83	1284	5	80	922	1172	6	18	121	1301	48	74
Future Volume (vph)	83	1284	5	80	922	1172	6	18	121	1301	48	74
Ideal Flow (vphpl)	1900	1900	1900	1900	1900	1900	1900	1900	1900	1900	1900	1900
Storage Length (ft)	250		250	250		250	250		250	250		250
Storage Lanes	1		0	1		2	1		0	3		0
Taper Length (ft)	25			25			25			25		
Lane Util. Factor	1.00	0.91	0.91	1.00	0.91	0.88	1.00	1.00	1.00	0.94	1.00	1.00
Frt		0.999				0.850		0.870			0.909	
Flt Protected	0.950			0.950			0.950			0.950		
Satd. Flow (prot)	1770	5080	0	1770	5085	2787	1770	1621	0	4990	1693	0
Flt Permitted	0.190			0.197			0.950			0.950		
Satd. Flow (perm)	354	5080	0	367	5085	2787	1770	1621	0	4990	1693	0
Right Turn on Red			Yes			Yes			Yes			Yes
Satd. Flow (RTOR)		1				1234		102			78	
Link Speed (mph)		30			30			30			30	
Link Distance (ft)		2453			6479			829			5444	
Travel Time (s)		55.8			147.3			18.8			123.7	
Peak Hour Factor	0.95	0.95	0.95	0.95	0.95	0.95	0.95	0.95	0.95	0.95	0.95	0.95
Adj. Flow (vph)	87	1352	5	84	971	1234	6	19	127	1369	51	78
Shared Lane Traffic (%)												
Lane Group Flow (vph)	87	1357	0	84	971	1234	6	146	0	1369	129	0
Enter Blocked Intersection	No	No	No	No	No	No	No	No	No	No	No	No
Lane Alignment	Left	Left	Right	Left	Left	Right	Left	Left	Right	Left	Left	Right
Median Width(ft)		12			12			36			36	
Link Offset(ft)		0			0			0			0	
Crosswalk Width(ft)		16			16			16			16	
Two way Left Turn Lane												
Headway Factor	1.00	1.00	1.00	1.00	1.00	1.00	1.00	1.00	1.00	1.00	1.00	1.00
Turning Speed (mph)	15		9	15		9	15		9	15		9
Number of Detectors	1	2		1	2	1	1	2		1	2	
Detector Template	Left	Thru		Left	Thru	Right	Left	Thru		Left	Thru	
Leading Detector (ft)	20	100		20	100	20	20	100		20	100	
Trailing Detector (ft)	0	0		0	0	0	0	0		0	0	
Detector 1 Position(ft)	0	0		0	0	0	0	0		0	0	
Detector 1 Size(ft)	20	6		20	6	20	20	6		20	6	
Detector 1 Type	Cl+Ex	Cl+Ex		Cl+Ex	Cl+Ex	Cl+Ex	Cl+Ex	Cl+Ex		Cl+Ex	Cl+Ex	
Detector 1 Channel												
Detector 1 Extend (s)	0.0	0.0		0.0	0.0	0.0	0.0	0.0		0.0	0.0	
Detector 1 Queue (s)	0.0	0.0		0.0	0.0	0.0	0.0	0.0		0.0	0.0	
Detector 1 Delay (s)	0.0	0.0		0.0	0.0	0.0	0.0	0.0		0.0	0.0	
Detector 2 Position(ft)		94			94			94			94	
Detector 2 Size(ft)		6			6			6			6	
Detector 2 Type		Cl+Ex			Cl+Ex			Cl+Ex			Cl+Ex	
Detector 2 Channel												
Detector 2 Extend (s)		0.0			0.0			0.0			0.0	
Turn Type	pm+pt	NA		pm+pt	NA	pm+ov	Prot	NA		Prot	NA	
Protected Phases	7	4		3	8	1	5	2		1	6	
Permitted Phases	4			8		8						

Lane Group	EBL	EBT	EBR	WBL	WBT	WBR	NBL	NBT	NBR	SBL	SBT	SBR
Detector Phase	7	4		3	8	1	5	2		1	6	
Switch Phase												
Minimum Initial (s)	4.0	4.0		4.0	4.0	4.0	4.0	4.0		4.0	4.0	
Minimum Split (s)	8.0	20.0		8.0	20.0	8.0	8.0	20.0		8.0	20.0	
Total Split (s)	9.0	25.0		8.0	24.0	27.0	8.0	20.0		27.0	39.0	
Total Split (%)	11.3%	31.3%		10.0%	30.0%	33.8%	10.0%	25.0%		33.8%	48.8%	
Maximum Green (s)	5.0	21.0		4.0	20.0	23.0	4.0	16.0		23.0	35.0	
Yellow Time (s)	3.5	3.5		3.5	3.5	3.5	3.5	3.5		3.5	3.5	
All-Red Time (s)	0.5	0.5		0.5	0.5	0.5	0.5	0.5		0.5	0.5	
Lost Time Adjust (s)	0.0	0.0		0.0	0.0	0.0	0.0	0.0		0.0	0.0	
Total Lost Time (s)	4.0	4.0		4.0	4.0	4.0	4.0	4.0		4.0	4.0	
Lead/Lag	Lead	Lag		Lead	Lag	Lead	Lead	Lag		Lead	Lag	
Lead-Lag Optimize?	Yes	Yes		Yes	Yes	Yes	Yes	Yes		Yes	Yes	
Vehicle Extension (s)	3.0	3.0		3.0	3.0	3.0	3.0	3.0		3.0	3.0	
Recall Mode	None	None		None	None	None	None	Max		None	Max	
Walk Time (s)		5.0			5.0			5.0			5.0	
Flash Dont Walk (s)		11.0			11.0			11.0			11.0	
Pedestrian Calls (#/hr)		0			0			0			0	
Act Effct Green (s)	25.0	21.0		23.4	20.3	47.3	4.0	16.0		23.0	41.5	
Actuated g/C Ratio	0.32	0.27		0.30	0.26	0.60	0.05	0.20		0.29	0.53	
v/c Ratio	0.43	0.99		0.46	0.74	0.57	0.07	0.35		0.93	0.14	
Control Delay	24.2	53.8		26.8	31.1	1.6	38.0	13.1		40.7	5.7	
Queue Delay	0.0	0.0		0.0	0.0	0.0	0.0	0.0		0.0	0.0	
Total Delay	24.2	53.8		26.8	31.1	1.6	38.0	13.1		40.7	5.7	
LOS	C	D		C	C	A	D	B		D	A	
Approach Delay		52.0			15.1			14.1			37.7	
Approach LOS		D			B			B			D	

Intersection Summary	
Area Type:	Other
Cycle Length: 80	
Actuated Cycle Length: 78.4	
Natural Cycle: 80	
Control Type: Actuated-Uncoordinated	
Maximum v/c Ratio: 0.99	
Intersection Signal Delay: 31.3	Intersection LOS: C
Intersection Capacity Utilization 75.8%	ICU Level of Service D
Analysis Period (min) 15	

Splits and Phases: 13: Loop Road & Dennis Chavez

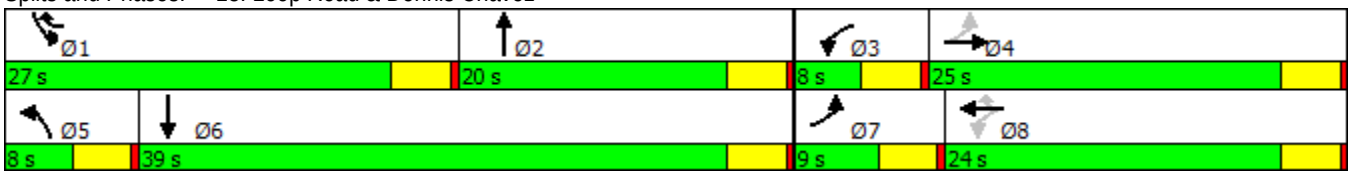

2040 PM Build

Loop Road and DennisChavez

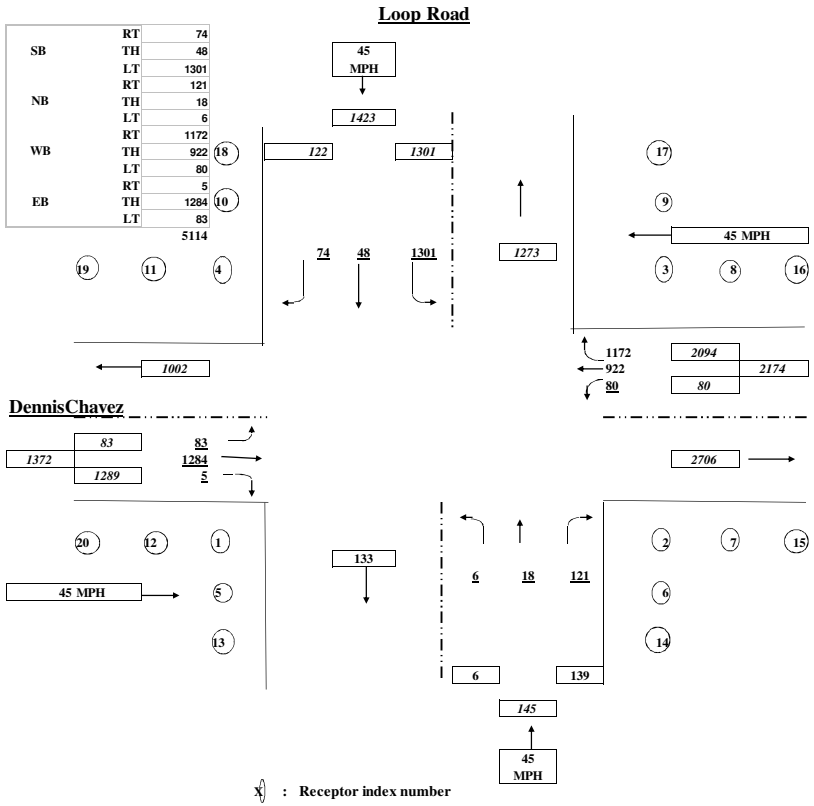

X : Receptor index number

: Approaching speed

F:\Santolina\3 LoopRd-DennisChavez\[36.xls]A

INTERSECTION CONFIGURATION , SIGNAL SETTING, AND EMISSION FACTOR

	EBL	EBT	EBR	WBL	WBT	WBR	NBL	NBT	NBR	SBL	SBT	SBR
LeftTurn Code*	1			1			1			1		
No. of Lanes	1	3	0	1	3	2	1	1	0	3	1	0
Lane Width (ft)	12	12	12	12	12	12	12	12	12	12	12	12
Median (ft)		4			4			4			4	
Offset Receptors and Lanes		0			0			0			0	
Cycle Length (sec)	80	80	80	80	80	80	80	80	80	80	80	80
1st Permitted Phase (inc yellow)	3.5	3.5		3.5	3.5	3.5	3.5	3.5		3.5	3.5	
2nd Permitted Phase (inc yellow)	5	21		4	20	27	4	16		23	35	
3rd Permitted Phase (inc yellow)												
Red Time (sec)	72	56	NA	73	57	50	73	61	NA	54	42	NA
Lost Time (Incld'd. above)	0	0	NA	0	0	0	0	0	NA	0	0	NA
Saturation Flow Rate (vphpl)	1900	1900	NA	1900	1900	1900	1900	1900	NA	1900	1900	NA
Speed (mph)		45			45			45			45	

* Left Turn Code : 1 - Exclusive left 2 - Left shared with through (IF 2 WBL should not be counted as a lane i.e. all LT lanes should be tallied under through)

Quee Links 800
Freeflow Links 1000

CALCULATION OF RECEPTOR'S COORDINATES

	COORDINATES			
RECEPTOR	X	Y	X	Y
#1			-36	-60
#2			36	-60
#3			48	84
#4			-48	60
#5			-36	-140
#6			36	-140
#7			116	-60
#8			128	84
#9			48	164
#10			-48	140
#11			-128	60
#12			-116	-60
#13			-36	-260
#14			36	-260
#15			236	-60
#16			248	84
#17			48	284
#18			-48	260
#19			-248	60
#20			-236	-60

Number of Links 21

CALCULATION OF LINK COORDINATES (w/ widths and lanes)

LINK	X1	Y1	X2	Y2	Width	Lanes
EB Approach	-1000	-26	0	-26	56	3
EB Departure	0	-26	1000	-26	56	3
EB Left	-1000	-2	0	-2	32	1
WB Approach	1000	26	0	26	80	5
WB Departure	0	26	-1000	26	56	3
WB Left	1000	2	0	2	32	1
NB Approach	14	-1000	14	0	32	1
NB Departure	26	0	26	1000	32	1
NB Left	2	-1000	2	0	32	1
SB Approach	-26	1000	-26	0	32	1
SB Departure	-14	0	-14	-1000	32	1
SB Left	-2	1000	-2	0	56	3
EB Left Queue	-26	-2	-826	-2	12	1
EB Through Queue	-26	-26	-826	-26	36	3
EB Right Queue	shared	shared	shared	shared	0	0
WB Left Queue	38	2	838	2	12	1
WB Through Queu	38	26	838	26	36	3
WB Right Queue	38	56	838	56	24	2
NB Left Queue	2	-50	2	-850	12	1
NB Through Queue	14	-50	14	-850	12	1
NB Right Queue	shared	shared	shared	shared	0	0
SB Left Queue	-2	50	-2	850	36	3
SB Through Queue	-26	50	-26	850	12	1
SB Right Queue	shared	shared	shared	shared	0	0

```
1                    CAL3QHC (93157)
                     IBM-PC VERSION (2.01)


                     RUN NAME: 36.DAT

                     RUN BEGIN ON 01/01/05 AT 18:38

                     CAL3QHC: LINE SOURCE DISPERSION MODEL - VERSION 2.0,
JANUARY 1992

      JOB: Santolina                                            RUN: 3-6
Loop Road and Dennis Chavez

       SITE & METEOROLOGICAL VARIABLES
       -------------------------------
       VS =   0.0 CM/S       VD =   0.0 CM/S       Z0 = 175. CM
        U =  1.0 M/S         CLAS =   4  (D)     ATIM =  60. MINUTES
MIXH =  1000. M   AMB =  3.0 PPM

       LINK VARIABLES
       --------------
         LINK DESCRIPTION     *         LINK COORDINATES (FT)          *
LENGTH  BRG TYPE   VPH    EF      H   W    V/C QUEUE
                              *   X1        Y1        X2        Y2     *
(FT)  (DEG)            (G/MI)  (FT) (FT)       (VEH)
      ------------------------*----------------------------------------*-
-------------------------------------------------------------
       1. EB A                *  -1000.0     -26.0       0.0     -26.0 *
1000.    90. AG   1289.   0.9   0.0 56.0
       2. EB D                *      0.0     -26.0    1000.0     -26.0 *
1000.    90. AG   2706.   0.9   0.0 56.0
       3. EB L                *  -1000.0      -2.0       0.0      -2.0 *
1000.    90. AG     83.   0.9   0.0 32.0
       4. WB A                *   1000.0      26.0       0.0      26.0 *
1000.   270. AG   2094.   0.9   0.0 80.0
       5. WB D                *      0.0      26.0   -1000.0      26.0 *
1000.   270. AG   1002.   0.9   0.0 56.0
       6. WB L                *   1000.0       2.0       0.0       2.0 *
1000.   270. AG     80.   0.9   0.0 32.0
       7. NB A                *     14.0   -1000.0      14.0       0.0 *
1000.   360. AG    139.   0.9   0.0 32.0
       8. NB D                *     26.0       0.0      26.0    1000.0 *
1000.   360. AG   1273.   0.9   0.0 32.0
       9. NB L                *      2.0   -1000.0       2.0       0.0 *
1000.   360. AG      6.   0.9   0.0 32.0
      10. SB A                *    -26.0    1000.0     -26.0       0.0 *
1000.   180. AG    122.   0.9   0.0 32.0
      11. SB D                *    -14.0       0.0     -14.0   -1000.0 *
1000.   180. AG    133.   0.9   0.0 32.0
      12. SB L                *     -2.0    1000.0      -2.0       0.0 *
1000.   180. AG   1301.   0.9   0.0 56.0
      13. EB L Q              *    -26.0      -2.0    -225.0      -2.0 *
199.   270. AG     10. 100.0   0.0 12.0 1.17  10.1
```

```
      14. EB T Q              *    -26.0     -26.0    -222.7     -26.0 *
197.   270. AG     24. 100.0   0.0 36.0 0.95  10.0
      15. WB L Q              *     38.0       2.0     451.9       2.0 *
414.    90. AG     10. 100.0   0.0 12.0 1.70  21.0
      16. WB T Q              *     38.0      26.0     137.0      26.0 *
99.    90. AG     24. 100.0   0.0 36.0 0.72   5.0
      17. WB R  Q             *     38.0      56.0     303.6      56.0 *
266.    90. AG     14. 100.0   0.0 24.0 0.99  13.5
      18. NB L  Q             *      2.0     -50.0       2.0     -52.4 *
2.   180. AG     10. 100.0   0.0 12.0 0.13   0.1
      19. NB T  Q             *     14.0     -50.0      14.0     -96.4 *
46.   180. AG      9. 100.0   0.0 12.0 0.42   2.4
      20. SB L  Q             *     -2.0      50.0      -2.0     206.2 *
156.   360. AG     23. 100.0   0.0 36.0 0.87   7.9
      21. SB T  Q             *    -26.0      50.0     -26.0      78.0 *
28.   360. AG      6. 100.0   0.0 12.0 0.16   1.4
1
```

PAGE 2

JOB: Santolina RUN: 3-6

Loop Road and Dennis Chavez

ADDITIONAL QUEUE LINK PARAMETERS

```
         LINK DESCRIPTION     *    CYCLE    RED     CLEARANCE  APPROACH
SATURATION   IDLE   SIGNAL   ARRIVAL
                              *    LENGTH   TIME    LOST TIME    VOL
FLOW RATE   EM FAC   TYPE     RATE
                              *     (SEC)   (SEC)    (SEC)      (VPH)
(VPH)    (gm/hr)
      -------------------------*-----------------------------------------
--------------------------------------
      13. EB L Q              *      80       72       3.0        83
1900       4.20      3        3
      14. EB T Q              *      80       56       3.0      1289
1900       4.20      3        3
      15. WB L Q              *      80       73       3.0        80
1900       4.20      3        3
      16. WB T Q              *      80       57       3.0       922
1900       4.20      3        3
      17. WB R  Q             *      80       50       3.0      1172
1900       4.20      3        3
      18. NB L  Q             *      80       73       3.0         6
1900       4.20      3        3
      19. NB T  Q             *      80       61       3.0       139
1900       4.20      3        3
      20. SB L  Q             *      80       54       3.0      1301
1900       4.20      3        3
      21. SB T  Q             *      80       42       3.0       122
1900       4.20      3        3
```

RECEPTOR LOCATIONS

```
                              *           COORDINATES (FT)          *
         RECEPTOR             *      X          Y          Z        *
```

1. 1	-36.0	-60.0	5.0	
2. 2	36.0	-60.0	5.0	
3. 3	48.0	84.0	5.0	
4. 4	-48.0	60.0	5.0	
5. 5	-36.0	-140.0	5.0	
6. 6	36.0	-140.0	5.0	
7. 7	116.0	-60.0	5.0	
8. 8	128.0	84.0	5.0	
9. 9	48.0	164.0	5.0	
10. 10	-48.0	140.0	5.0	
11. 11	-128.0	60.0	5.0	
12. 12	-116.0	-60.0	5.0	
13. 13	-36.0	-260.0	5.0	
14. 14	36.0	-260.0	5.0	
15. 15	236.0	-60.0	5.0	
16. 16	248.0	84.0	5.0	
17. 17	48.0	284.0	5.0	
18. 18	-48.0	260.0	5.0	
19. 19	-248.0	60.0	5.0	
20. 20	-236.0	-60.0	5.0	

1

PAGE 3

JOB: Santolina RUN: 3-6

Loop Road and Dennis Chavez

MODEL RESULTS

REMARKS : In search of the angle corresponding to the maximum concentration, only the first angle, of the angles with same maximum concentrations, is indicated as maximum.

WIND ANGLE RANGE: 0.-360.

WIND ANGLE (DEGR)	CONCENTRATION (PPM) REC1	REC2	REC3	REC4	REC5	REC6	REC7	REC8	REC9	REC10	REC11	REC12	REC13	REC14	REC15	REC16	REC17	REC18	REC19	REC20
0.	3.1	3.1	3.0	3.0	3.0	3.0	3.1	3.0	3.0	3.0	3.0	3.1	3.0	3.0	3.1	3.0	3.0	3.0	3.0	3.0
5.	3.0	3.1	3.0	3.0	3.0	3.0	3.1	3.0	3.0	3.0	3.0	3.1	3.0	3.0	3.1	3.0	3.0	3.0	3.0	3.0
10.	3.0	3.1	3.0	3.0	3.0	3.0	3.1	3.0	3.0	3.0	3.0	3.1	3.0	3.0	3.1	3.0	3.0	3.0	3.0	3.0
15.	3.0	3.1	3.0	3.0	3.0	3.0	3.1	3.0	3.0	3.0	3.0	3.1	3.0	3.0	3.1	3.0	3.0	3.0	3.0	3.0
20.	3.0	3.1	3.0	3.0	3.0	3.0	3.1	3.0	3.0	3.0	3.0	3.1	3.0	3.0	3.1	3.0	3.0	3.0	3.0	3.0

25.	*	3.0	3.1	3.0	3.0	3.0	3.0	3.1	3.0	3.0	3.0	3.0	3.1	3.0	3.0	3.1	3.0	3.0	3.0	3.0
30.	*	3.0	3.1	3.0	3.1	3.0	3.0	3.1	3.0	3.0	3.0	3.0	3.1	3.0	3.0	3.1	3.0	3.0	3.0	3.0
35.	*	3.0	3.1	3.0	3.1	3.0	3.0	3.1	3.0	3.0	3.0	3.0	3.1	3.0	3.0	3.1	3.0	3.0	3.0	3.0
40.	*	3.0	3.1	3.0	3.1	3.0	3.0	3.1	3.0	3.0	3.0	3.0	3.1	3.0	3.0	3.1	3.0	3.0	3.0	3.1
45.	*	3.0	3.1	3.0	3.1	3.0	3.0	3.1	3.0	3.0	3.0	3.0	3.1	3.0	3.0	3.1	3.0	3.0	3.0	3.1
50.	*	3.0	3.1	3.0	3.1	3.0	3.0	3.1	3.0	3.0	3.0	3.0	3.1	3.0	3.0	3.1	3.0	3.0	3.0	3.1
55.	*	3.1	3.1	3.0	3.1	3.0	3.0	3.1	3.0	3.0	3.0	3.0	3.1	3.0	3.0	3.1	3.0	3.0	3.0	3.1
60.	*	3.1	3.1	3.0	3.1	3.0	3.0	3.1	3.0	3.0	3.1	3.0	3.1	3.0	3.0	3.1	3.0	3.0	3.0	3.1
65.	*	3.1	3.1	3.0	3.1	3.0	3.0	3.1	3.0	3.0	3.1	3.0	3.1	3.0	3.0	3.1	3.0	3.0	3.0	3.1
70.	*	3.1	3.1	3.0	3.0	3.0	3.0	3.1	3.0	3.0	3.1	3.0	3.0	3.0	3.0	3.1	3.0	3.0	3.0	3.1
75.	*	3.1	3.1	3.0	3.0	3.0	3.0	3.1	3.0	3.0	3.0	3.0	3.1	3.0	3.0	3.1	3.0	3.0	3.0	3.1
80.	*	3.1	3.1	3.0	3.0	3.0	3.0	3.1	3.0	3.0	3.0	3.0	3.1	3.0	3.0	3.1	3.0	3.0	3.0	3.1
85.	*	3.1	3.1	3.0	3.1	3.0	3.0	3.1	3.0	3.0	3.0	3.0	3.1	3.0	3.0	3.1	3.0	3.0	3.0	3.0
90.	*	3.1	3.1	3.0	3.1	3.0	3.0	3.1	3.0	3.0	3.1	3.0	3.1	3.0	3.0	3.1	3.0	3.0	3.0	3.0
95.	*	3.1	3.1	3.1	3.1	3.0	3.0	3.1	3.1	3.0	3.0	3.0	3.0	3.0	3.0	3.1	3.1	3.0	3.0	3.0
100.	*	3.0	3.0	3.1	3.1	3.0	3.0	3.0	3.1	3.0	3.0	3.0	3.0	3.0	3.0	3.0	3.1	3.0	3.0	3.0
105.	*	3.0	3.0	3.1	3.2	3.0	3.0	3.0	3.1	3.0	3.1	3.0	3.0	3.0	3.0	3.0	3.1	3.0	3.0	3.0
110.	*	3.0	3.0	3.1	3.2	3.0	3.0	3.0	3.1	3.0	3.1	3.0	3.0	3.0	3.0	3.0	3.1	3.0	3.0	3.0
115.	*	3.0	3.0	3.1	3.1	3.0	3.0	3.0	3.1	3.0	3.1	3.0	3.0	3.0	3.0	3.0	3.1	3.0	3.0	3.0
120.	*	3.0	3.0	3.1	3.1	3.0	3.0	3.0	3.1	3.0	3.1	3.0	3.0	3.0	3.0	3.0	3.1	3.0	3.0	3.0
125.	*	3.0	3.0	3.1	3.0	3.0	3.0	3.0	3.1	3.0	3.1	3.0	3.0	3.0	3.0	3.0	3.1	3.0	3.0	3.0
130.	*	3.0	3.0	3.1	3.0	3.0	3.0	3.0	3.1	3.0	3.1	3.0	3.0	3.0	3.0	3.0	3.1	3.0	3.0	3.0
135.	*	3.0	3.0	3.1	3.0	3.0	3.0	3.0	3.1	3.0	3.0	3.0	3.0	3.0	3.0	3.0	3.1	3.0	3.0	3.0
140.	*	3.0	3.0	3.1	3.0	3.0	3.0	3.0	3.1	3.0	3.0	3.0	3.0	3.0	3.0	3.0	3.1	3.0	3.0	3.0
145.	*	3.0	3.0	3.1	3.0	3.0	3.0	3.0	3.0	3.0	3.0	3.0	3.0	3.0	3.0	3.0	3.0	3.0	3.0	3.0
150.	*	3.0	3.0	3.0	3.0	3.0	3.0	3.0	3.0	3.0	3.0	3.0	3.0	3.0	3.0	3.0	3.0	3.0	3.0	3.0
155.	*	3.0	3.0	3.0	3.0	3.0	3.0	3.0	3.0	3.0	3.0	3.0	3.0	3.0	3.0	3.0	3.0	3.0	3.0	3.0

```
 160.  *   3.0   3.0   3.0   3.0   3.0   3.0   3.0   3.0   3.0   3.0
3.0   3.0   3.0   3.0   3.0   3.0   3.0   3.0   3.0   3.0
 165.  *   3.0   3.0   3.0   3.0   3.0   3.0   3.0   3.0   3.0   3.0
3.0   3.0   3.0   3.0   3.0   3.0   3.0   3.0   3.0   3.0
 170.  *   3.0   3.0   3.0   3.0   3.0   3.0   3.0   3.0   3.0   3.0
3.0   3.0   3.0   3.0   3.0   3.0   3.0   3.0   3.0   3.0
 175.  *   3.0   3.0   3.0   3.0   3.0   3.0   3.0   3.0   3.0   3.0
3.0   3.0   3.0   3.0   3.0   3.0   3.0   3.0   3.0   3.0
 180.  *   3.0   3.0   3.0   3.0   3.0   3.0   3.0   3.0   3.0   3.0
3.0   3.0   3.0   3.0   3.0   3.0   3.0   3.0   3.0   3.0
 185.  *   3.0   3.0   3.0   3.0   3.0   3.0   3.0   3.0   3.0   3.0
3.0   3.0   3.0   3.0   3.0   3.0   3.0   3.0   3.0   3.0
 190.  *   3.0   3.0   3.0   3.0   3.0   3.0   3.0   3.0   3.0   3.0
3.0   3.0   3.0   3.0   3.0   3.0   3.1   3.0   3.0   3.0
 195.  *   3.0   3.0   3.0   3.0   3.0   3.0   3.0   3.0   3.1   3.0
3.0   3.0   3.0   3.0   3.0   3.0   3.1   3.0   3.0   3.0
 200.  *   3.0   3.0   3.0   3.0   3.0   3.0   3.0   3.0   3.1   3.0
3.0   3.0   3.0   3.0   3.0   3.0   3.1   3.0   3.0   3.0
 205.  *   3.0   3.0   3.0   3.0   3.0   3.0   3.0   3.0   3.1   3.0
3.0   3.0   3.0   3.0   3.0   3.0   3.1   3.0   3.0   3.0
1
```


JOB: Santolina RUN: 3-6
Loop Road and Dennis Chavez

```
 WIND  * CONCENTRATION
 ANGLE *      (PPM)
 (DEGR)* REC1  REC2  REC3  REC4  REC5  REC6  REC7  REC8  REC9  REC10
REC11 REC12 REC13 REC14 REC15 REC16 REC17 REC18 REC19 REC20
 ------*-------------------------------------------------------------------
-------------------------------------------------------
 210.  *   3.0   3.0   3.0   3.0   3.0   3.0   3.0   3.0   3.1   3.0
3.0   3.0   3.0   3.0   3.0   3.0   3.1   3.0   3.0   3.0
 215.  *   3.0   3.0   3.0   3.0   3.0   3.0   3.0   3.0   3.0   3.0
3.0   3.0   3.0   3.0   3.0   3.0   3.0   3.0   3.0   3.0
 220.  *   3.0   3.0   3.0   3.0   3.0   3.0   3.0   3.0   3.0   3.0
3.0   3.0   3.0   3.0   3.0   3.1   3.0   3.0   3.0   3.0
 225.  *   3.0   3.0   3.0   3.0   3.0   3.0   3.0   3.1   3.0   3.0
3.0   3.0   3.0   3.0   3.0   3.1   3.0   3.0   3.0   3.0
 230.  *   3.0   3.0   3.0   3.0   3.0   3.0   3.0   3.0   3.0   3.0
3.0   3.0   3.0   3.0   3.0   3.1   3.0   3.0   3.0   3.0
 235.  *   3.0   3.0   3.0   3.0   3.0   3.0   3.0   3.0   3.0   3.0
3.0   3.0   3.0   3.0   3.0   3.1   3.0   3.0   3.0   3.0
 240.  *   3.0   3.0   3.0   3.0   3.0   3.0   3.0   3.0   3.0   3.0
3.0   3.0   3.0   3.0   3.0   3.1   3.0   3.0   3.0   3.0
 245.  *   3.0   3.0   3.0   3.0   3.0   3.0   3.0   3.0   3.0   3.0
3.0   3.0   3.0   3.0   3.0   3.1   3.0   3.0   3.0   3.0
 250.  *   3.0   3.0   3.0   3.0   3.0   3.0   3.0   3.0   3.0   3.0
3.0   3.0   3.0   3.0   3.0   3.1   3.0   3.0   3.0   3.0
 255.  *   3.0   3.0   3.0   3.0   3.0   3.0   3.0   3.0   3.0   3.0
3.0   3.0   3.0   3.0   3.0   3.0   3.0   3.0   3.0   3.0
 260.  *   3.0   3.0   3.0   3.0   3.0   3.0   3.0   3.0   3.0   3.0
3.0   3.0   3.0   3.0   3.0   3.0   3.0   3.0   3.0   3.0
```

```
 265.  *   3.0   3.0   3.0   3.0   3.0   3.0   3.0   3.0   3.0   3.0
3.0   3.0   3.0   3.0   3.0   3.0   3.0   3.0   3.0   3.0
 270.  *   3.0   3.0   3.0   3.0   3.0   3.0   3.0   3.0   3.0   3.0
3.0   3.0   3.0   3.0   3.1   3.0   3.0   3.0   3.0   3.0
 275.  *   3.1   3.0   3.0   3.0   3.0   3.0   3.1   3.0   3.0   3.0
3.0   3.1   3.0   3.0   3.1   3.0   3.0   3.0   3.0   3.1
 280.  *   3.2   3.0   3.0   3.0   3.0   3.0   3.1   3.0   3.0   3.0
3.0   3.1   3.0   3.0   3.1   3.0   3.0   3.0   3.0   3.1
 285.  *   3.2   3.0   3.0   3.0   3.0   3.0   3.1   3.0   3.0   3.0
3.0   3.1   3.0   3.0   3.1   3.0   3.0   3.0   3.0   3.1
 290.  *   3.2   3.0   3.0   3.0   3.0   3.0   3.1   3.0   3.0   3.0
3.0   3.2   3.0   3.0   3.1   3.0   3.0   3.0   3.0   3.1
 295.  *   3.2   3.0   3.0   3.0   3.0   3.0   3.1   3.0   3.0   3.0
3.0   3.2   3.0   3.0   3.1   3.0   3.0   3.0   3.0   3.1
 300.  *   3.1   3.0   3.0   3.0   3.0   3.0   3.1   3.0   3.0   3.0
3.0   3.1   3.0   3.0   3.1   3.0   3.0   3.0   3.0   3.0
 305.  *   3.1   3.0   3.0   3.0   3.0   3.0   3.1   3.0   3.0   3.0
3.0   3.1   3.0   3.0   3.1   3.0   3.0   3.0   3.0   3.0
 310.  *   3.1   3.0   3.0   3.0   3.0   3.0   3.1   3.0   3.0   3.0
3.0   3.1   3.0   3.0   3.1   3.0   3.0   3.0   3.0   3.0
 315.  *   3.1   3.1   3.1   3.0   3.0   3.0   3.1   3.0   3.0   3.0
3.0   3.1   3.0   3.0   3.1   3.0   3.0   3.0   3.0   3.0
 320.  *   3.1   3.1   3.0   3.0   3.0   3.0   3.1   3.0   3.0   3.0
3.0   3.1   3.0   3.0   3.1   3.0   3.0   3.0   3.0   3.0
 325.  *   3.1   3.1   3.0   3.0   3.0   3.0   3.1   3.0   3.0   3.0
3.0   3.1   3.0   3.0   3.1   3.0   3.0   3.0   3.0   3.0
 330.  *   3.1   3.1   3.1   3.0   3.0   3.0   3.1   3.0   3.1   3.0
3.0   3.1   3.0   3.0   3.1   3.0   3.1   3.0   3.0   3.0
 335.  *   3.1   3.1   3.1   3.0   3.0   3.0   3.1   3.0   3.1   3.0
3.0   3.1   3.0   3.0   3.1   3.0   3.1   3.0   3.0   3.0
 340.  *   3.1   3.1   3.1   3.0   3.0   3.0   3.1   3.0   3.1   3.0
3.0   3.1   3.0   3.0   3.1   3.0   3.1   3.0   3.0   3.0
 345.  *   3.1   3.1   3.1   3.0   3.0   3.0   3.1   3.0   3.1   3.0
3.0   3.1   3.0   3.0   3.1   3.0   3.1   3.0   3.0   3.0
 350.  *   3.1   3.1   3.1   3.0   3.0   3.0   3.1   3.0   3.1   3.0
3.0   3.1   3.0   3.0   3.1   3.0   3.1   3.0   3.0   3.0
 355.  *   3.1   3.1   3.1   3.0   3.0   3.0   3.1   3.0   3.1   3.0
3.0   3.1   3.0   3.0   3.1   3.0   3.1   3.0   3.0   3.0
 360.  *   3.1   3.1   3.0   3.0   3.0   3.0   3.1   3.0   3.0   3.0
3.0   3.1   3.0   3.0   3.1   3.0   3.0   3.0   3.0   3.0
 ------*-------------------------------------------------------------------
-------------------------------------------------------
 MAX   *   3.2   3.1   3.1   3.2   3.0   3.0   3.1   3.1   3.1   3.1
3.0   3.2   3.0   3.0   3.1   3.1   3.1   3.0   3.0   3.1
 DEGR. *  280     0    95   105     0     0     0    95   195    60     0
290     0     0     0    95   190     0     0    40

 THE HIGHEST CONCENTRATION IS    3.20 PPM AT  280 DEGREES FROM REC1 .
1
```


JOB: Santolina RUN: 3-6
Loop Road and Dennis Chavez

RECEPTOR - LINK MATRIX FOR THE ANGLE PRODUCING
THE MAXIMUM CONCENTRATION FOR EACH RECEPTOR

```
          *    CO/LINK  (PPM)
          *    ANGLE (DEGREES)
          *  REC1  REC2  REC3  REC4  REC5  REC6  REC7  REC8  REC9  REC10
REC11 REC12 REC13 REC14 REC15 REC16 REC17 REC18 REC19 REC20
   LINK # *   280     0    95   105     0     0     0    95   195    60
0   290     0     0     0    95   190     0     0    40
   -------*-----------------------------------------------------------------
-------------------------------------------------------------
       1  *   0.1   0.0   0.0   0.0   0.0   0.0   0.0   0.0   0.0   0.0
0.0   0.1   0.0   0.0   0.0   0.0   0.0   0.0   0.0   0.0
       2  *   0.0   0.1   0.0   0.1   0.0   0.0   0.1   0.0   0.0   0.0
0.0   0.0   0.0   0.0   0.1   0.0   0.0   0.0   0.0   0.0
       3  *   0.0   0.0   0.0   0.0   0.0   0.0   0.0   0.0   0.0   0.0
0.0   0.0   0.0   0.0   0.0   0.0   0.0   0.0   0.0   0.0
       4  *   0.0   0.0   0.1   0.1   0.0   0.0   0.0   0.1   0.0   0.0
0.0   0.0   0.0   0.0   0.0   0.1   0.0   0.0   0.0   0.0
       5  *   0.0   0.0   0.0   0.0   0.0   0.0   0.0   0.0   0.0   0.0
0.0   0.0   0.0   0.0   0.0   0.0   0.0   0.0   0.0   0.0
       6  *   0.0   0.0   0.0   0.0   0.0   0.0   0.0   0.0   0.0   0.0
0.0   0.0   0.0   0.0   0.0   0.0   0.0   0.0   0.0   0.0
       7  *   0.0   0.0   0.0   0.0   0.0   0.0   0.0   0.0   0.0   0.0
0.0   0.0   0.0   0.0   0.0   0.0   0.0   0.0   0.0   0.0
       8  *   0.0   0.0   0.0   0.0   0.0   0.0   0.0   0.0   0.1   0.0
0.0   0.0   0.0   0.0   0.0   0.0   0.1   0.0   0.0   0.0
       9  *   0.0   0.0   0.0   0.0   0.0   0.0   0.0   0.0   0.0   0.0
0.0   0.0   0.0   0.0   0.0   0.0   0.0   0.0   0.0   0.0
      10  *   0.0   0.0   0.0   0.0   0.0   0.0   0.0   0.0   0.0   0.0
0.0   0.0   0.0   0.0   0.0   0.0   0.0   0.0   0.0   0.0
      11  *   0.0   0.0   0.0   0.0   0.0   0.0   0.0   0.0   0.0   0.0
0.0   0.0   0.0   0.0   0.0   0.0   0.0   0.0   0.0   0.0
      12  *   0.0   0.0   0.0   0.0   0.0   0.0   0.0   0.0   0.0   0.0
0.0   0.0   0.0   0.0   0.0   0.0   0.0   0.0   0.0   0.0
      13  *   0.0   0.0   0.0   0.0   0.0   0.0   0.0   0.0   0.0   0.0
0.0   0.0   0.0   0.0   0.0   0.0   0.0   0.0   0.0   0.0
      14  *   0.1   0.0   0.0   0.0   0.0   0.0   0.0   0.0   0.0   0.0
0.0   0.1   0.0   0.0   0.0   0.0   0.0   0.0   0.0   0.1
      15  *   0.0   0.0   0.0   0.0   0.0   0.0   0.0   0.0   0.0   0.0
0.0   0.0   0.0   0.0   0.0   0.0   0.0   0.0   0.0   0.0
      16  *   0.0   0.0   0.0   0.0   0.0   0.0   0.0   0.0   0.0   0.0
0.0   0.0   0.0   0.0   0.0   0.0   0.0   0.0   0.0   0.0
      17  *   0.0   0.0   0.0   0.0   0.0   0.0   0.0   0.0   0.0   0.0
0.0   0.0   0.0   0.0   0.0   0.0   0.0   0.0   0.0   0.0
      18  *   0.0   0.0   0.0   0.0   0.0   0.0   0.0   0.0   0.0   0.0
0.0   0.0   0.0   0.0   0.0   0.0   0.0   0.0   0.0   0.0
      19  *   0.0   0.0   0.0   0.0   0.0   0.0   0.0   0.0   0.0   0.0
0.0   0.0   0.0   0.0   0.0   0.0   0.0   0.0   0.0   0.0
      20  *   0.0   0.0   0.0   0.0   0.0   0.0   0.0   0.0   0.0   0.1
0.0   0.0   0.0   0.0   0.0   0.0   0.0   0.0   0.0   0.0
      21  *   0.0   0.0   0.0   0.0   0.0   0.0   0.0   0.0   0.0   0.0
0.0   0.0   0.0   0.0   0.0   0.0   0.0   0.0   0.0   0.0
```

RUN ENDED ON 01/01/05 AT 18:38

Appendix C – Project Parameters and Acceptable Ranges for CO Categorical Hot Spot Finding

Project Parameters and Acceptable Ranges for CO Categorical Hot Spot Finding

Parameter	Acceptable Range
Analysis year	Greater than or equal to 2015
Angle of cross streets for intersection (degrees)	90
Maximum grade for the intersection (%)	Less than or equal to 2
Maximum grade on cross street for the intersection (%)	0
Number of through lanes	Less than or equal to 4
Number of left turn lanes	Less than or equal to 2
Lane width (feet)	12
Median width (feet)	0
Peak hour average approach speed (mph)	Greater than or equal to 25
Peak hour approach volume (vph)	Less than or equal to 2640
Peak hour Level of Service	A through E
Ambient temperature (ºF)	Greater than or equal to -10
Heavy-duty trucks (%)	Greater than or equal to 5
1-hour background CO concentrations (ppm)	Less than or equal to 29.5
8-hour background CO concentrations (ppm)	Less than or equal to 5.1
Persistence factor	Less than or equal to 0.7

Source: FHWA. 2014. Carbon Monoxide (CO) Categorical Hot Spot Finding process. Available online at: https://www.fhwa.dot.gov/environment/air_quality/conformity/policy_and_guidance/cmcf/hotspot_finding.cfm.