AIR QUALITY IMPACT ANALYSIS

for the

Sunport Boulevard Extension

Prepared for the
Bernalillo County

Prepared by
Cienega Environmental
and
URS Corporation

December 2011

CONTENTS

1.0 Introduction....1
2.0 Air Quality Analysis Methodology....3
3.0 Conclusions....4

TABLES

Carbon Monoxide Model Results

1 I-25 Northbound/Sunport Boulevard Ramps....5
2 I-25 Southbound/Sunport Boulevard Ramps....6
3 Broadway Boulevard/Sunport Boulevard Intersection....7

FIGURE

1 Vicinity Map....2

EXHIBITS

1 Traffic Information
2 CAL3QHC Link and Receptor Information

ATTACHMENT

1 Mobile 6.2 Emissions Input and Output Files

AIR QUALITY IMPACT ANALYSIS

1.0 INTRODUCTION

The following air quality impact analysis (AQIA) was prepared to evaluate potential traffic-related air quality affects of proposed roadway improvements for the Sunport Boulevard (Sunport) Extension project, between Interstate 25 (I-25) and Broadway Boulevard (Broadway), in Bernalillo County, New Mexico. This project is sponsored by Bernalillo County (County), as local government lead, with participation by the Federal Highway Administration (FHWA). The project is identified in the 2012-2017 *Transportation Improvement Program* (TIP) (Control Number A300160), with $9.4 million of federal funds, County matching funds of $1.601 million, and County non-matching funds of $6.0 million.

The AQIA is based on traffic analysis conducted by URS Corporation (see attached Exhibit 1), which was undertaken to develop appropriate geometric design improvements for the project and understand related traffic operations and impacts. Three signalized intersections were analyzed: the Northbound I-25/Sunport Ramps, the Southbound I-25/Sunport Ramps, and the Broadway/Sunport Intersection.

The air quality analysis identifies traffic related carbon monoxide (CO) levels with the proposed Sunport Extension project (this type of project-specific analysis is termed a CO hot spot analysis). The modeling and assumptions in the analysis were prepared in conformance with guidance issued the U.S. Environmental Protection Agency (EPA) and the City of Albuquerque, Environmental Health Department, Air Quality Division (AEHD). The EPA's regulatory recommendations for CO air quality modeling can be found in *Guidelines for Modeling Carbon Monoxide from Roadway Intersections* (EPA, 1992). Under this guidance, CO hot-spot analyses must be based on the latest planning assumptions available at the time the analysis begins and include interagency consultation to develop appropriate modeling procedures and assumptions. The AEHA is the local agency involved in air quality monitoring and analysis.

In December 2010, EPA approved the Motor Vehicles Emission Simulator (MOVES) model for use in CO hot-spot analyses, with a two-year grace period that expires on December 20, 2012 (*Federal Register*, vol. 75, No. 243/Monday, December 20, 2010/Notices). For the Sunport Extension AQIA, the MOVES model was not used because adequate input information was not available. Rather, the previously approved and currently EPA-accepted MOBILE 6.2 model was used. This determination was made in coordination with the local AEHD.

The three project intersections with the highest signal delay and traffic volumes were analyzed to evaluate potential air quality problems. The AQIA predicts CO levels at these intersections for the AM and PM rush hours in the 2030 build year. To evaluate the worst case scenario, year 2012 emission factors were used with the 2030 traffic volumes. This reflects the model assumption that the 2012 fleet produces more emissions than the future, cleaner 2030 fleet.

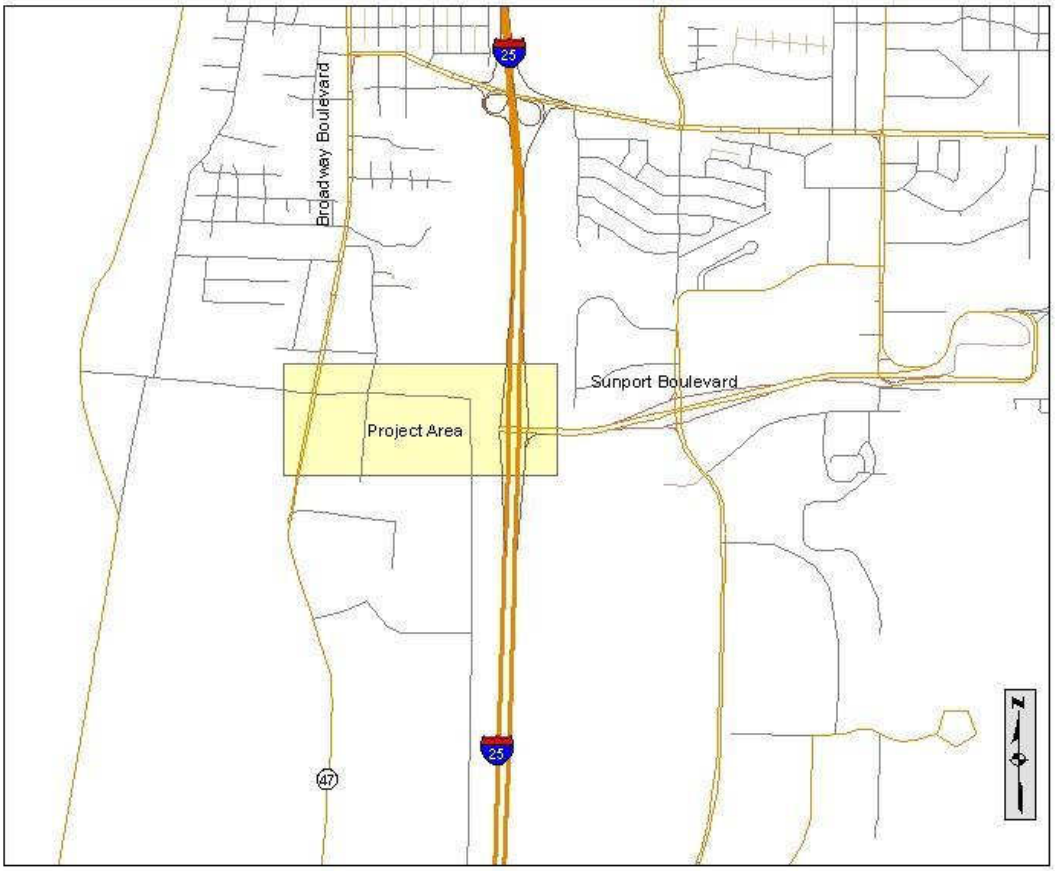

Figure 1: Vicinity Map: Sunport Boulevard Extension

0 0.05 0.1 0.2 0.3 0.4 Miles

Universal Transverse Mercator Projection, Zone 13
1983 North American Datum

2.0 AIR QUALITY ANALYSIS METHODODOLGY

Computer models were used to estimate the concentrations of CO in the project vicinity. The modeling process includes predictions of CO emission rates for the mix of vehicles at given speeds during the 2030 study year and analysis of CO dispersion from the street network, resulting in CO concentrations at identified receptors. Receptors are sites near the street where the public may be vulnerable to CO exposure.

Each of the scenarios was evaluated using the EPA's Mobile 6.2 emissions model (as already described) and the CAL3QHC air quality dispersion model. The inputs to the models were based on local air quality information developed by the AEHD for Bernalillo County. The background level and persistence value used in the analysis are as follows:

One-hour background CO level of 3.0 parts per million (ppm)
0.75 persistence factor to convert between 1-hour and 8-hour values

Vehicle emission rates were obtained from MOBILE 6.2 for free flow and idle emission conditions. Emission rates for both running and start emissions for all vehicle classes were generated assuming minimum/maximum winter temperatures of 32.2 degrees Fahrenheit (F) and 50.7 F, and Reid vapor pressures (RVP) of 9.0 pounds per square inch (psi). For the oxygenated fuels program in Bernalillo County, a 100% alcohol blend with 2.7% oxygen content was assumed. Posted travel speeds were used to generate emission rates for flowing traffic, and idle emission rates were calculated in accordance with EPA/AEHD policy, by multiplying the modeled 2.5 miles per hour (mph) emission rate times 2.5. Mobile 6.2 data are included in Attachment 1.

To model CO dispersion, the EPA-approved CAL3QHC model was used. This model relies on assumptions about worst-case meteorological, site, and traffic conditions. It produces hourly CO concentrations at specific receptor locations. For this project, 60 receptors were sited throughout the project area, 20 at each signalized intersection. The receptors were located according to the criteria in the *Guidelines for Modeling Carbon Monoxide from Roadway Intersections* (EPA, 1992) and AEHD recommendations. Additional information on receptor locations for each modeled intersection and other model coordinate data are included in Exhibit 2 (depicting the previously identified intersections).

The data in Exhibit 1 was used to provide information on traffic volumes and operational characteristics for the affected intersections. CAL3QHC performs a wind angle search in 5-degree increments to determine which angles will produce the worst-case CO concentrations at the receptors. Other meteorological assumptions include one meter-per-second wind speed, Class D atmospheric stability classification, and a mixing height of 1000 meters.

3.0 CONCLUSIONS

The AQIA evaluates modeled results in relation to the National Ambient Air Quality Standards (NAAQS) of 9.0 ppm over eight-hours and 35.0 ppm during the worst one-hour period. The results from the modeling are shown in Tables 1 through 3. All of the modeled results are well below the NAAQS. It is the conclusion of this report that the proposed developments will not "cause or contribute to air quality exceedences."

Table 1: Northbound I-25 and Sunport Carbon Monoxide Levels*

Receptor #	2012 Emission Factors, 2030 Volumes A.M.	
	Build (B)	
	1-Hr	8-Hr
1	5.9	4.4
2	7.2	5.4
3	5.8	4.4
4	5.6	4.2
5	4.8	3.6
6	5.4	4.1
7	6.1	4.6
8	5.1	3.8
9	4.8	3.6
10	4.8	3.6
11	5.0	3.8
12	5.9	4.4
13	4.5	3.4
14	4.9	3.7
15	5.6	4.2
16	4.6	3.5
17	4.4	3.3
18	4.4	3.3
19	4.8	3.6
20	5.8	4.4
Average	**5.3**	**4.0**
Receptor #	**2012 Emission Factors, 2030 Volumes P.M.**	
	Build (B)	
	1-Hr	8-Hr
1	6.1	4.6
2	6.7	5.0
3	6.2	4.7
4	6.7	5.0
5	4.9	3.7
6	5.1	3.8
7	6.0	4.5
8	6.5	4.9
9	5.3	4.0
10	5.3	4.0
11	5.8	4.4
12	6.1	4.6
13	4.3	3.2
14	4.3	3.2
15	5.8	4.4
16	6.0	4.5
17	4.8	3.6
18	4.9	3.7
19	5.5	4.1
20	6.0	4.5
Average	**5.6**	**4.2**

*** All concentrations are in parts per million (ppm).**

**** 1-Hour background level is ppm.**

***** 8-Hour values are calculated by multipling 1-hour values by a persistence factor of: 0.75.**

Table 2: Southbound I-25 and Sunport Blvd Carbon Monoxide Levels*

Receptor #	2012 Emission Factors, 2030 Volumes A.M.	
	Build (B)	
	1-Hr	8-Hr
1	6.0	4.5
2	5.7	4.3
3	5.7	4.3
4	5.3	4.0
5	4.6	3.5
6	4.6	3.5
7	5.3	4.0
8	4.8	3.6
9	5.5	4.1
10	4.8	3.6
11	4.8	3.6
12	5.7	4.3
13	3.9	2.9
14	3.9	2.9
15	5.2	3.9
16	4.3	3.2
17	5.2	3.9
18	4.4	3.3
19	4.8	3.6
20	5.0	3.8
Average	**5.0**	**3.7**
Receptor #	**2012 Emission Factors, 2030 Volumes P.M.**	
	Build (B)	
	1-Hr	8-Hr
1	6.3	4.7
2	5.7	4.3
3	5.8	4.4
4	5.5	4.1
5	4.8	3.6
6	4.8	3.6
7	5.0	3.8
8	5.3	4.0
9	5.4	4.1
10	4.7	3.5
11	5.3	4.0
12	5.6	4.2
13	4.3	3.2
14	4.4	3.3
15	5.0	3.8
16	4.7	3.5
17	4.7	3.5
18	4.3	3.2
19	5.0	3.8
20	4.7	3.5
Average	**5.1**	**3.8**

*** All concentrations are in parts per million (ppm).**

**** 1-Hour background level is ppm.**

***** 8-Hour values are calculated by multipling 1-hour values by a persistence factor of: 0.75.**

Table 3: Broadway Blvd and Sunport Blvd Carbon Monoxide Levels*

Receptor #	2012 Emission Factors, 2030 Volumes A.M.	
	Build (B)	
	1-Hr	8-Hr
1	5.2	3.9
2	5.9	4.4
3	6.7	5.0
4	5.7	4.3
5	5.0	3.8
6	6.0	4.5
7	4.6	3.5
8	5.0	3.8
9	5.4	4.1
10	5.5	4.1
11	5.2	3.9
12	5.0	3.8
13	4.6	3.5
14	5.8	4.4
15	4.5	3.4
16	4.3	3.2
17	4.8	3.6
18	4.4	3.3
19	4.6	3.5
20	4.5	3.4
Average	**5.1**	**3.9**
Receptor #	**2012 Emission Factors, 2030 Volumes P.M.**	
	Build (B)	
	1-Hr	8-Hr
1	5.7	4.3
2	5.3	4.0
3	5.9	4.4
4	6.2	4.7
5	5.5	4.1
6	5.5	4.1
7	5.4	4.1
8	5.2	3.9
9	4.8	3.6
10	5.5	4.1
11	4.9	3.7
12	5.2	3.9
13	4.8	3.6
14	4.6	3.5
15	5.1	3.8
16	4.8	3.6
17	4.4	3.3
18	4.8	3.6
19	4.6	3.5
20	4.4	3.3
Average	**5.1**	**3.9**

*** All concentrations are in parts per million (ppm).**

**** 1-Hour background level is ppm.**

***** 8-Hour values are calculated by multipling 1-hour values by a persistence factor of: 0.75.**

Exhibit 1-A:
Traffic Information-AM Peak

Map - I-25 & Sunport Blvd 2030 AM Peak_Build_Final - Added SBRT

7/8/2010

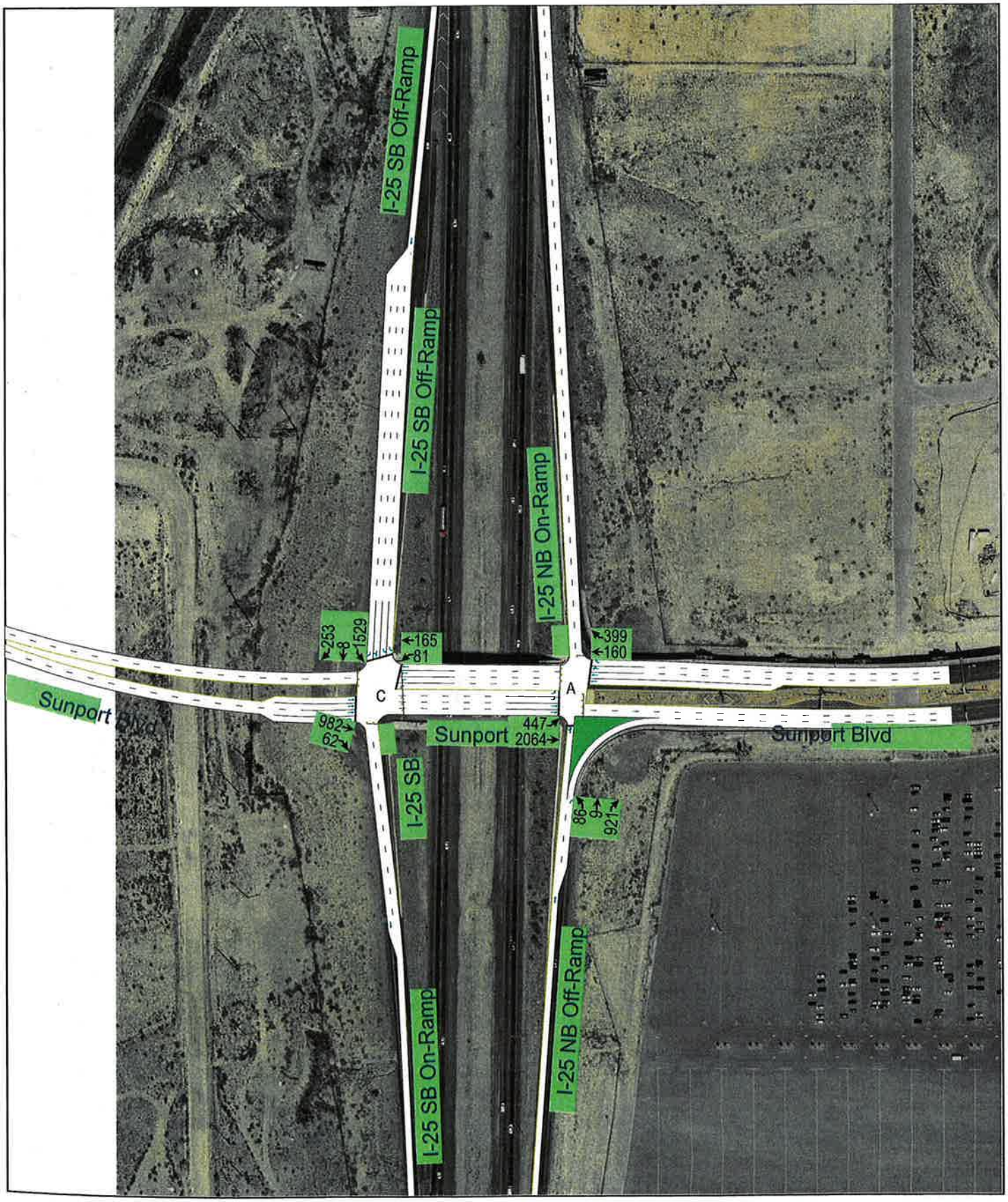

Map - I-25 & Sunport Blvd 2030 AM Peak_Build_Final - Added SBRT

7/8/2010

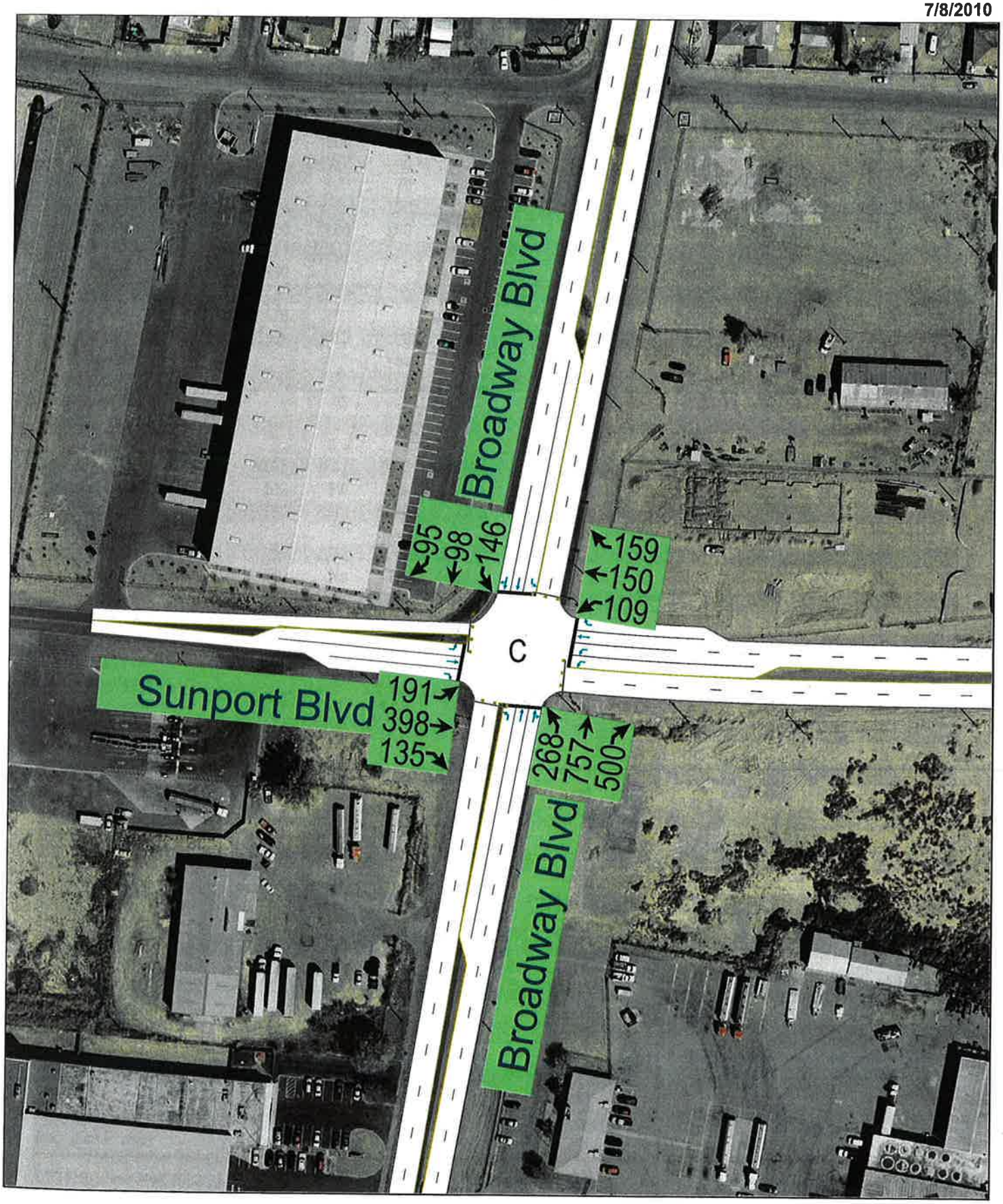

Lanes, Volumes, Timings 2030 AM Peak_Build_Final - Added SBRT
1: Sunport Blvd & I-25 NB On-Ramp

7/8/2010

Lane Group	EBL	EBT	EBR	WBL	WBT	WBR	NBL	NBT	NBR	SBL	SBT	SBR
Lane Configurations												
Volume (vph)	447	2064	0	0	160	399	86	9	921	0	0	0
Ideal Flow (vphpl)	1900	1900	1900	1900	1900	1900	1900	1900	1900	1900	1900	1900
Storage Length (ft)	0		0	340		0	0		0	0		0
Storage Lanes	2		0	1		1	0		1	0		0
Taper Length (ft)	25		25	25		25	25		25	25		25
Lane Util. Factor	*1.00	*1.00	1.00	1.00	0.86	0.86	1.00	1.00	1.00	1.00	1.00	1.00
Frt					0.917	0.850			0.850			
Flt Protected	0.950							0.957				
Satd. Flow (prot)	3438	3619	0	0	4407	1362	0	1783	1583	0	0	0
Flt Permitted	0.470							0.957				
Satd. Flow (perm)	1701	3619	0	0	4407	1362	0	1783	1583	0	0	0
Right Turn on Red			Yes			Yes			Yes			Yes
Satd. Flow (RTOR)					217	217			199			
Link Speed (mph)		45			45			35			45	
Link Distance (ft)		357			717			367			1313	
Travel Time (s)		5.4			10.9			7.1			19.9	
Peak Hour Factor	0.92	0.92	0.92	0.92	0.92	0.92	0.92	0.92	0.92	0.92	0.92	0.92
Heavy Vehicles (%)	5%	5%	2%	2%	2%	2%	2%	2%	2%	2%	2%	2%
Adj. Flow (vph)	486	2243	0	0	174	434	93	10	1001	0	0	0
Shared Lane Traffic (%)						50%						
Lane Group Flow (vph)	486	2243	0	0	391	217	0	103	1001	0	0	0
Enter Blocked Intersection	No	No	No	No	No	No	No	No	No	No	No	No
Lane Alignment	Left	Left	Right	Left	Left	Right	Left	Left	Right	Left	Left	Right
Median Width(ft)		24			36			0			0	
Link Offset(ft)		18			-12			0			0	
Crosswalk Width(ft)		16			16			16			16	
Two way Left Turn Lane												
Headway Factor	1.00	1.00	1.00	1.00	1.00	1.00	1.00	1.00	1.00	1.00	1.00	1.00
Turning Speed (mph)	15		9	15		9	15		20	15		9
Number of Detectors	1	2			2	1	1	2	1			
Detector Template	Left	Thru			Thru	Right	Left	Thru	Right			
Leading Detector (ft)	20	100			100	20	20	100	20			
Trailing Detector (ft)	0	0			0	0	0	0	0			
Detector 1 Position(ft)	0	0			0	0	0	0	0			
Detector 1 Size(ft)	20	6			6	20	20	6	20			
Detector 1 Type	Cl+Ex	Cl+Ex			Cl+Ex	Cl+Ex	Cl+Ex	Cl+Ex	Cl+Ex			
Detector 1 Channel												
Detector 1 Extend (s)	0.0	0.0			0.0	0.0	0.0	0.0	0.0			
Detector 1 Queue (s)	0.0	0.0			0.0	0.0	0.0	0.0	0.0			
Detector 1 Delay (s)	0.0	0.0			0.0	0.0	0.0	0.0	0.0			
Detector 2 Position(ft)		94			94			94				
Detector 2 Size(ft)		6			6			6				
Detector 2 Type		Cl+Ex			Cl+Ex			Cl+Ex				
Detector 2 Channel												
Detector 2 Extend (s)		0.0			0.0			0.0				
Turn Type	pm+pt					Perm	Perm		Free			
Protected Phases	5	2			6			8				
Permitted Phases	2					6	8		Free			

Lane Group	EBL	EBT	EBR	WBL	WBT	WBR	NBL	NBT	NBR	SBL	SBT	SBR
Detector Phase	5	2			6	6	8	8				
Switch Phase												
Minimum Initial (s)	10.0	10.0			10.0	10.0	10.0	10.0				
Minimum Split (s)	14.5	21.5			21.5	21.5	20.5	20.5				
Total Split (s)	14.6	89.5	0.0	0.0	74.9	74.9	20.5	20.5	0.0	0.0	0.0	0.0
Total Split (%)	13.3%	81.4%	0.0%	0.0%	68.1%	68.1%	18.6%	18.6%	0.0%	0.0%	0.0%	0.0%
Maximum Green (s)	10.1	84.0			69.4	69.4	16.0	16.0				
Yellow Time (s)	3.5	4.5			4.5	4.5	3.5	3.5				
All-Red Time (s)	1.0	1.0			1.0	1.0	1.0	1.0				
Lost Time Adjust (s)	0.0	0.0	0.0	0.0	0.0	0.0	0.0	0.0	0.0	0.0	0.0	0.0
Total Lost Time (s)	4.5	5.5	4.0	4.0	5.5	5.5	4.5	4.5	4.0	4.0	4.0	4.0
Lead/Lag	Lead				Lag	Lag						
Lead-Lag Optimize?	Yes				Yes	Yes						
Vehicle Extension (s)	3.0	3.0			3.0	3.0	3.0	3.0				
Recall Mode	None	C-Max			C-Max	C-Max	Max	Max				
Act Effct Green (s)	85.0	84.0			69.5	69.5		16.0	110.0			
Actuated g/C Ratio	0.77	0.76			0.63	0.63		0.15	1.00			
v/c Ratio	0.33	0.81			0.14	0.23		0.40	0.63			
Control Delay	0.6	4.3			3.6	1.7		47.8	1.9			
Queue Delay	0.0	2.3			0.0	0.0		0.0	0.0			
Total Delay	0.6	6.6			3.6	1.7		47.8	1.9			
LOS	A	A			A	A		D	A			
Approach Delay		5.6			2.9			6.2				
Approach LOS		A			A			A				
Queue Length 50th (ft)	0	44			16	0		67	0			
Queue Length 95th (ft)	m0	20			30	31		122	0			
Internal Link Dist (ft)		277			637			287			1233	
Turn Bay Length (ft)												
Base Capacity (vph)	1474	2764			2863	940		259	1583			
Starvation Cap Reductn	0	377			0	0		0	0			
Spillback Cap Reductn	0	0			0	0		0	0			
Storage Cap Reductn	0	0			0	0		0	0			
Reduced v/c Ratio	0.33	0.94			0.14	0.23		0.40	0.63			

Intersection Summary

Area Type: Other
Cycle Length: 110
Actuated Cycle Length: 110
Offset: 3 (3%), Referenced to phase 2:EBTL and 6:WBT, Start of Green
Natural Cycle: 80
Control Type: Actuated-Coordinated
Maximum v/c Ratio: 0.81
Intersection Signal Delay: 5.4 Intersection LOS: A
Intersection Capacity Utilization 95.1% ICU Level of Service F
Analysis Period (min) 15
* User Entered Value
m Volume for 95th percentile queue is metered by upstream signal.

Lanes, Volumes, Timings 2030 AM Peak_Build_Final - Added SBRT
5: Sunport Blvd & I-25 SB Off-Ramp

7/8/2010

Lane Group	EBL	EBT	EBR	WBL	WBT	WBR	NBL	NBT	NBR	SBL	SBT	SBR
Lane Configurations												
Volume (vph)	0	982	62	81	165	0	0	0	0	1529	8	253
Ideal Flow (vphpl)	1900	1900	1900	1900	1900	1900	1900	1900	1900	1900	1900	1900
Grade (%)		7%			0%			0%			0%	
Storage Length (ft)	150		150	0		0	0		0	0		0
Storage Lanes	1		1	2		0	0		0	2		1
Taper Length (ft)	25		25	25		25	25		25	25		25
Lane Util. Factor	1.00	*1.00	1.00	0.97	0.95	1.00	1.00	1.00	1.00	*1.00	*1.00	0.95
Frt			0.850								0.859	0.850
Flt Protected				0.950						0.950		
Satd. Flow (prot)	0	5239	1484	3433	3539	0	0	0	0	3438	1557	1461
Flt Permitted				0.164						0.950		
Satd. Flow (perm)	0	5239	1484	593	3539	0	0	0	0	3438	1557	1461
Right Turn on Red			Yes			Yes			Yes			Yes
Satd. Flow (RTOR)			57								135	140
Link Speed (mph)		45			45			45			35	
Link Distance (ft)		1010			357			475			825	
Travel Time (s)		15.3			5.4			7.2			16.1	
Peak Hour Factor	0.92	0.92	0.92	0.92	0.92	0.92	0.92	0.92	0.92	0.92	0.92	0.92
Heavy Vehicles (%)	2%	5%	5%	2%	2%	2%	2%	2%	2%	5%	2%	5%
Adj. Flow (vph)	0	1067	67	88	179	0	0	0	0	1662	9	275
Shared Lane Traffic (%)												49%
Lane Group Flow (vph)	0	1067	67	88	179	0	0	0	0	1662	144	140
Enter Blocked Intersection	No	No	No	No	No	No	No	No	No	No	No	No
Lane Alignment	Left	Right	Right	Left	Left	Right	Left	Left	Right	Right	Left	Right
Median Width(ft)		24			24			24			12	
Link Offset(ft)		-12			24			0			0	
Crosswalk Width(ft)		16			16			16			16	
Two way Left Turn Lane												
Headway Factor	1.05	1.05	1.05	1.00	1.00	1.00	1.00	1.00	1.00	1.00	1.00	1.00
Turning Speed (mph)	15		9	15		9	15		9	15		9
Number of Detectors		2	1	1	2					1	2	1
Detector Template		Thru	Right	Left	Thru					Left	Thru	Right
Leading Detector (ft)		100	20	20	100					20	100	20
Trailing Detector (ft)		0	0	0	0					0	0	0
Detector 1 Position(ft)		0	0	0	0					0	0	0
Detector 1 Size(ft)		6	20	20	6					20	6	20
Detector 1 Type		Cl+Ex	Cl+Ex	Cl+Ex	Cl+Ex					Cl+Ex	Cl+Ex	Cl+Ex
Detector 1 Channel												
Detector 1 Extend (s)		0.0	0.0	0.0	0.0					0.0	0.0	0.0
Detector 1 Queue (s)		0.0	0.0	0.0	0.0					0.0	0.0	0.0
Detector 1 Delay (s)		0.0	0.0	0.0	0.0					0.0	0.0	0.0
Detector 2 Position(ft)		94			94						94	
Detector 2 Size(ft)		6			6						6	
Detector 2 Type		Cl+Ex			Cl+Ex						Cl+Ex	
Detector 2 Channel												
Detector 2 Extend (s)		0.0			0.0						0.0	
Turn Type			Perm	pm+pt						Perm		Perm
Protected Phases		2		1	6						4	

Lane Group	EBL	EBT	EBR	WBL	WBT	WBR	NBL	NBT	NBR	SBL	SBT	SBR
Permitted Phases			2	6						4		4
Detector Phase		2	2	1	6					4	4	4
Switch Phase												
Minimum Initial (s)		10.0	10.0	10.0	10.0					10.0	10.0	10.0
Minimum Split (s)		21.5	21.5	14.5	21.5					20.5	20.5	20.5
Total Split (s)	0.0	32.4	32.4	14.5	46.9	0.0	0.0	0.0	0.0	63.1	63.1	63.1
Total Split (%)	0.0%	29.5%	29.5%	13.2%	42.6%	0.0%	0.0%	0.0%	0.0%	57.4%	57.4%	57.4%
Maximum Green (s)		26.9	26.9	10.0	41.4					58.6	58.6	58.6
Yellow Time (s)		4.5	4.5	3.5	4.5					3.5	3.5	3.5
All-Red Time (s)		1.0	1.0	1.0	1.0					1.0	1.0	1.0
Lost Time Adjust (s)	0.0	0.0	0.0	0.0	0.0	0.0	0.0	0.0	0.0	0.0	0.0	0.0
Total Lost Time (s)	4.0	5.5	5.5	4.5	5.5	4.0	4.0	4.0	4.0	4.5	4.5	4.5
Lead/Lag		Lead	Lead	Lag								
Lead-Lag Optimize?		Yes	Yes	Yes								
Vehicle Extension (s)		3.0	3.0	3.0	3.0					3.0	3.0	3.0
Recall Mode		C-Max	C-Max	None	C-Max					Max	Max	Max
Act Effct Green (s)		29.8	29.8	42.4	41.4					58.6	58.6	58.6
Actuated g/C Ratio		0.27	0.27	0.39	0.38					0.53	0.53	0.53
v/c Ratio		0.75	0.15	0.18	0.13					0.91	0.16	0.17
Control Delay		35.8	10.7	41.6	36.1					31.9	3.0	2.7
Queue Delay		0.0	0.0	0.0	0.0					0.3	0.0	0.0
Total Delay		35.8	10.7	41.6	36.1					32.2	3.0	2.7
LOS		D	B	D	D					C	A	A
Approach Delay		34.3			37.9						28.0	
Approach LOS		C			D						C	
Queue Length 50th (ft)		226	8	25	54					508	3	0
Queue Length 95th (ft)		m275	m10	46	85					#632	32	30
Internal Link Dist (ft)		930			277			395			745	
Turn Bay Length (ft)			150									
Base Capacity (vph)		1419	444	487	1332					1832	893	844
Starvation Cap Reductn		0	0	0	0					0	0	0
Spillback Cap Reductn		0	0	0	0					17	0	0
Storage Cap Reductn		0	0	0	0					0	0	0
Reduced v/c Ratio		0.75	0.15	0.18	0.13					0.92	0.16	0.17

Intersection Summary

Area Type: Other
Cycle Length: 110
Actuated Cycle Length: 110
Offset: 40 (36%), Referenced to phase 2:EBT and 6:WBTL, Start of Green
Natural Cycle: 90
Control Type: Actuated-Coordinated
Maximum v/c Ratio: 0.91
Intersection Signal Delay: 30.9 Intersection LOS: C
Intersection Capacity Utilization 95.1% ICU Level of Service F
Analysis Period (min) 15
* User Entered Value
\# 95th percentile volume exceeds capacity, queue may be longer.
Queue shown is maximum after two cycles.

Lanes, Volumes, Timings 2030 AM Peak_Build_Final - Added SBRT
13: Sunport Blvd & Broadway Blvd

7/8/2010

Lane Group	EBL	EBT	EBR	WBL	WBT	WBR	NBL	NBT	NBR	SBL	SBT	SBR
Lane Configurations												
Volume (vph)	191	398	135	109	150	159	268	757	500	146	98	95
Ideal Flow (vphpl)	1900	1900	1900	1900	1900	1900	1900	1900	1900	1900	1900	1900
Storage Length (ft)	175		125	175		125	225		0	225		0
Storage Lanes	1		1	1		1	1		0	1		0
Taper Length (ft)	25		25	25		25	25		25	25		25
Lane Util. Factor	1.00	1.00	1.00	0.97	1.00	1.00	1.00	0.95	0.95	1.00	0.95	0.95
Frt			0.850			0.850		0.940			0.926	
Flt Protected	0.950			0.950			0.950			0.950		
Satd. Flow (prot)	1770	1863	1583	3433	1863	1583	1770	3288	0	1719	3277	0
Flt Permitted	0.445			0.176			0.566			0.090		
Satd. Flow (perm)	829	1863	1583	636	1863	1583	1054	3288	0	163	3277	0
Right Turn on Red			Yes			Yes			Yes			Yes
Satd. Flow (RTOR)			90			173		179			103	
Link Speed (mph)		30			45			30			30	
Link Distance (ft)		406			1491			828			703	
Travel Time (s)		9.2			22.6			18.8			16.0	
Peak Hour Factor	0.92	0.92	0.92	0.92	0.92	0.92	0.92	0.92	0.92	0.92	0.92	0.92
Heavy Vehicles (%)	2%	2%	2%	2%	2%	2%	2%	2%	5%	5%	2%	2%
Adj. Flow (vph)	208	433	147	118	163	173	291	823	543	159	107	103
Shared Lane Traffic (%)												
Lane Group Flow (vph)	208	433	147	118	163	173	291	1366	0	159	210	0
Enter Blocked Intersection	No	No	No	No	No	No	No	No	No	No	No	No
Lane Alignment	Left	Left	Right	Left	Left	Right	Left	Left	Right	Left	Left	Right
Median Width(ft)		24			24			18			12	
Link Offset(ft)		0			0			0			0	
Crosswalk Width(ft)		16			16			16			16	
Two way Left Turn Lane												
Headway Factor	1.00	1.00	1.00	1.00	1.00	1.00	1.00	1.00	1.00	1.00	1.00	1.00
Turning Speed (mph)	15		9	15		9	15		9	15		9
Number of Detectors	1	2	1	1	2	1	1	2		1	2	
Detector Template	Left	Thru	Right	Left	Thru	Right	Left	Thru		Left	Thru	
Leading Detector (ft)	20	100	20	20	100	20	20	100		20	100	
Trailing Detector (ft)	0	0	0	0	0	0	0	0		0	0	
Detector 1 Position(ft)	0	0	0	0	0	0	0	0		0	0	
Detector 1 Size(ft)	20	6	20	20	6	20	20	6		20	6	
Detector 1 Type	Cl+Ex	Cl+Ex	Cl+Ex	Cl+Ex	Cl+Ex	Cl+Ex	Cl+Ex	Cl+Ex		Cl+Ex	Cl+Ex	
Detector 1 Channel												
Detector 1 Extend (s)	0.0	0.0	0.0	0.0	0.0	0.0	0.0	0.0		0.0	0.0	
Detector 1 Queue (s)	0.0	0.0	0.0	0.0	0.0	0.0	0.0	0.0		0.0	0.0	
Detector 1 Delay (s)	0.0	0.0	0.0	0.0	0.0	0.0	0.0	0.0		0.0	0.0	
Detector 2 Position(ft)		94			94			94			94	
Detector 2 Size(ft)		6			6			6			6	
Detector 2 Type		Cl+Ex			Cl+Ex			Cl+Ex			Cl+Ex	
Detector 2 Channel												
Detector 2 Extend (s)		0.0			0.0			0.0			0.0	
Turn Type	pm+pt		Perm	pm+pt		Perm	pm+pt			pm+pt		
Protected Phases	7	4		3	8		5	2		1	6	
Permitted Phases	4		4	8		8	2			6		

Lane Group	EBL	EBT	EBR	WBL	WBT	WBR	NBL	NBT	NBR	SBL	SBT	SBR
Detector Phase	7	4	4	3	8	8	5	2		1	6	
Switch Phase												
Minimum Initial (s)	7.0	10.0	10.0	7.0	10.0	10.0	7.0	10.0		7.0	10.0	
Minimum Split (s)	11.5	20.5	20.5	11.5	20.5	20.5	11.5	20.5		11.5	20.5	
Total Split (s)	16.9	33.0	33.0	11.5	27.6	27.6	18.3	52.3	0.0	13.2	47.2	0.0
Total Split (%)	15.4%	30.0%	30.0%	10.5%	25.1%	25.1%	16.6%	47.5%	0.0%	12.0%	42.9%	0.0%
Maximum Green (s)	12.4	28.5	28.5	7.0	23.1	23.1	13.8	47.8		8.7	42.7	
Yellow Time (s)	3.5	3.5	3.5	3.5	3.5	3.5	3.5	3.5		3.5	3.5	
All-Red Time (s)	1.0	1.0	1.0	1.0	1.0	1.0	1.0	1.0		1.0	1.0	
Lost Time Adjust (s)	0.0	0.0	0.0	0.0	0.0	0.0	0.0	0.0	0.0	0.0	0.0	0.0
Total Lost Time (s)	4.5	4.5	4.5	4.5	4.5	4.5	4.5	4.5	4.0	4.5	4.5	4.0
Lead/Lag	Lead	Lag	Lag	Lead	Lag	Lag	Lead	Lag		Lead	Lag	
Lead-Lag Optimize?												
Vehicle Extension (s)	3.0	3.0	3.0	3.0	3.0	3.0	3.0	3.0		3.0	3.0	
Recall Mode	None	None	None	None	None	None	None	C-Max		None	C-Max	
Walk Time (s)		5.0	5.0		5.0	5.0		5.0			5.0	
Flash Dont Walk (s)		11.0	11.0		11.0	11.0		11.0			11.0	
Pedestrian Calls (#/hr)		0	0		0	0		0			0	
Act Effct Green (s)	38.8	27.6	27.6	29.7	22.7	22.7	61.4	48.8		53.1	44.5	
Actuated g/C Ratio	0.35	0.25	0.25	0.27	0.21	0.21	0.56	0.44		0.48	0.40	
v/c Ratio	0.53	0.93	0.32	0.34	0.42	0.37	0.43	0.88		0.80	0.15	
Control Delay	31.1	67.6	15.8	25.6	31.4	4.0	15.1	32.1		51.0	11.2	
Queue Delay	0.0	0.0	0.0	0.0	0.0	0.0	0.0	0.0		0.0	0.0	
Total Delay	31.1	67.6	15.8	25.6	31.4	4.0	15.1	32.1		51.0	11.2	
LOS	C	E	B	C	C	A	B	C		D	B	
Approach Delay		48.3			19.5			29.1			28.4	
Approach LOS		D			B			C			C	
Queue Length 50th (ft)	105	296	31	20	69	1	104	410		61	24	
Queue Length 95th (ft)	167	#478	85	46	116	0	158	#531		#175	50	
Internal Link Dist (ft)		326			1411			748			623	
Turn Bay Length (ft)	175		125	175		125	225			225		
Base Capacity (vph)	401	483	477	349	391	469	683	1559		202	1387	
Starvation Cap Reductn	0	0	0	0	0	0	0	0		0	0	
Spillback Cap Reductn	0	0	0	0	0	0	0	0		0	0	
Storage Cap Reductn	0	0	0	0	0	0	0	0		0	0	
Reduced v/c Ratio	0.52	0.90	0.31	0.34	0.42	0.37	0.43	0.88		0.79	0.15	

Intersection Summary

Area Type: Other
Cycle Length: 110
Actuated Cycle Length: 110
Offset: 108 (98%), Referenced to phase 2:NBTL and 6:SBTL, Start of Green
Natural Cycle: 90
Control Type: Actuated-Coordinated
Maximum v/c Ratio: 0.93
Intersection Signal Delay: 32.3 Intersection LOS: C
Intersection Capacity Utilization 86.8% ICU Level of Service E
Analysis Period (min) 15
95th percentile volume exceeds capacity, queue may be longer.

Exhibit 1-B:
Traffic Information-PM Peak

Map - I-25 & Sunport Blvd 2030 PM Peak_Build_Final - Added SBRT

7/8/2010

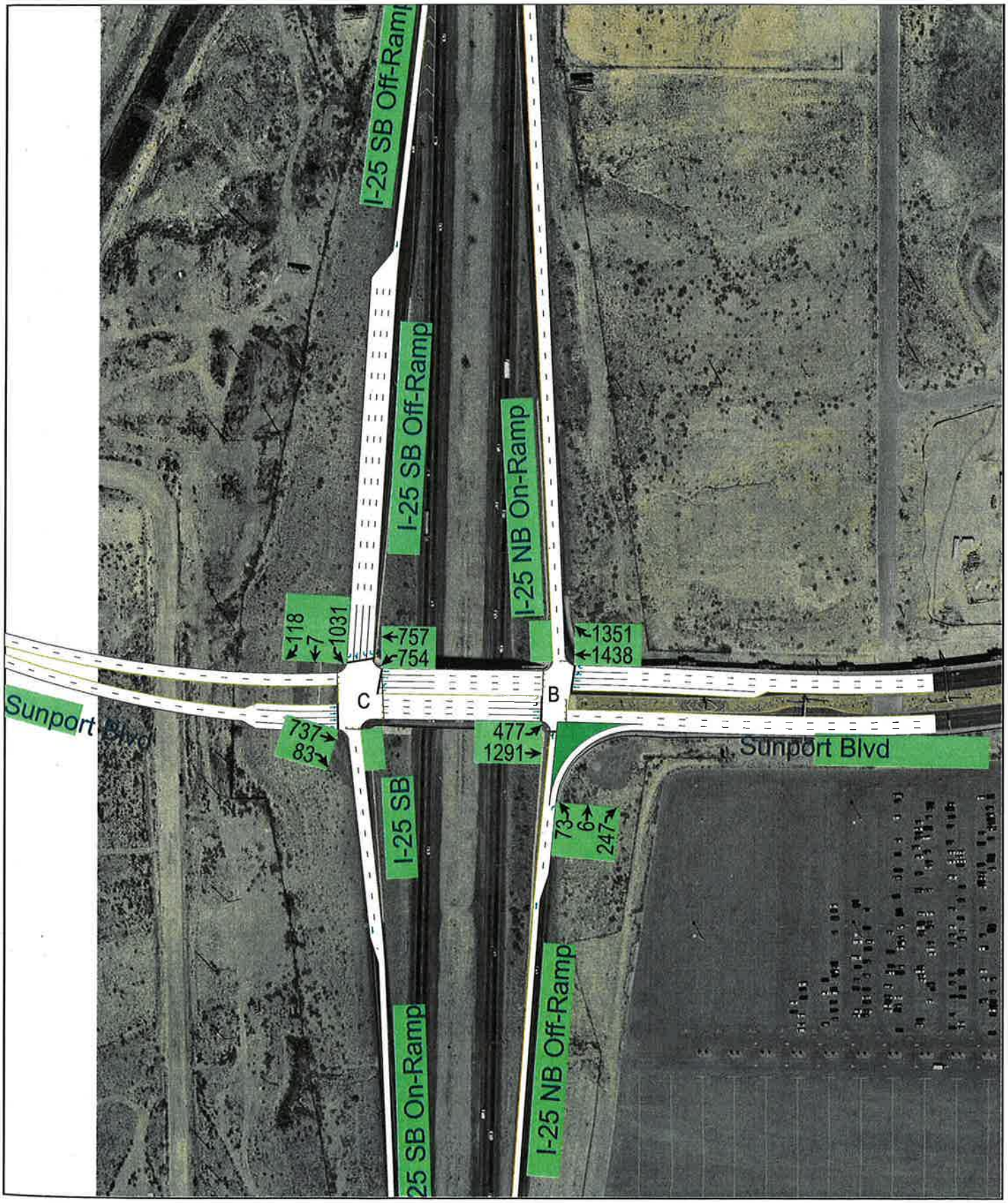

Map - I-25 & Sunport Blvd 2030 PM Peak_Build_Final - Added SBRT

7/8/2010

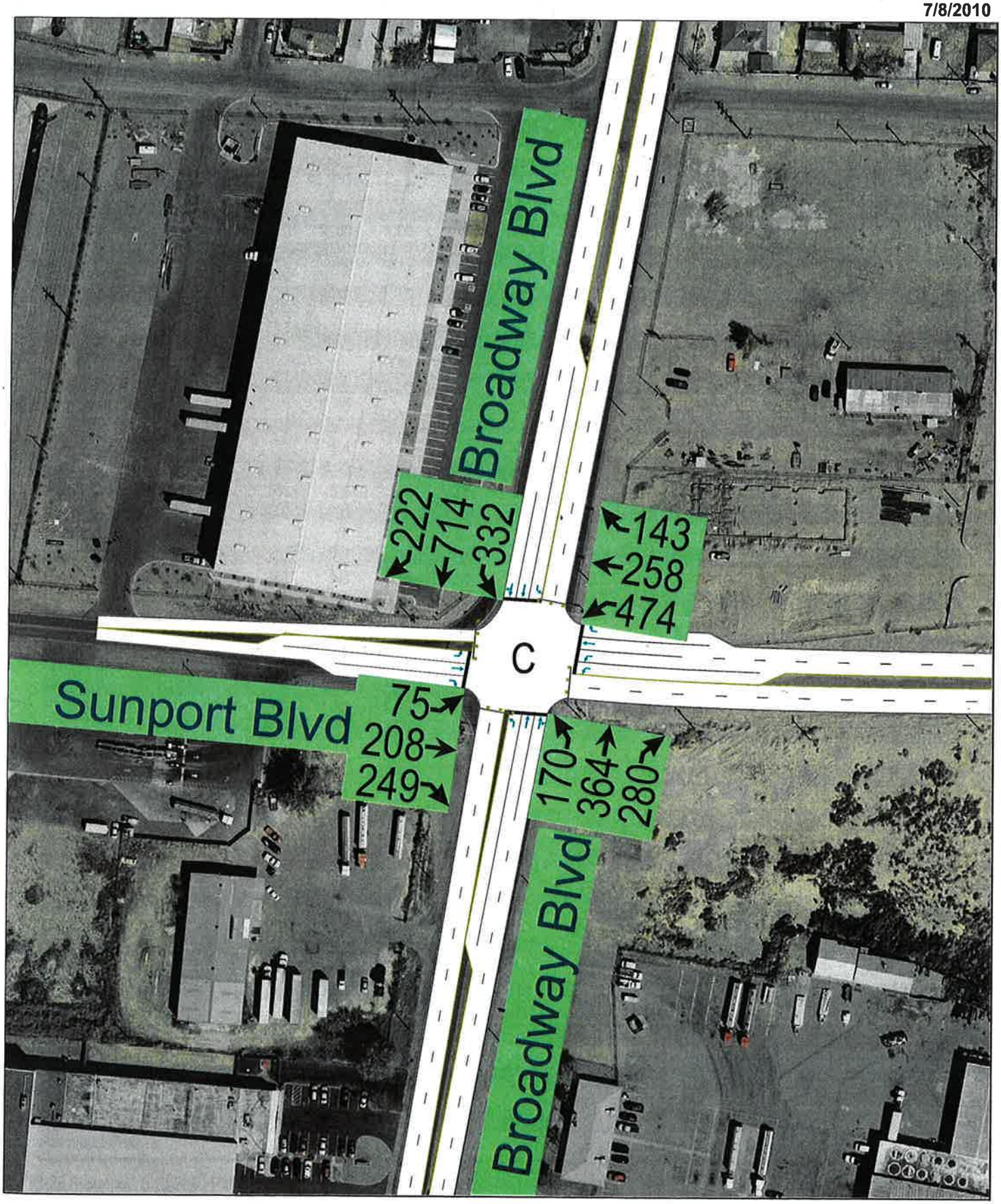

Lanes, Volumes, Timings 2030 PM Peak_Build_Final - Added SBRT
1: Sunport Blvd & I-25 NB On-Ramp

7/8/2010

Lane Group	EBL	EBT	EBR	WBL	WBT	WBR	NBL	NBT	NBR	SBL	SBT	SBR
Lane Configurations												
Volume (vph)	477	1291	0	0	1438	1351	73	6	247	0	0	0
Ideal Flow (vphpl)	1900	1900	1900	1900	1900	1900	1900	1900	1900	1900	1900	1900
Storage Length (ft)	0		0	340		0	0		0	0		0
Storage Lanes	2		0	1		1	0		1	0		0
Taper Length (ft)	25		25	25		25	25		25	25		25
Lane Util. Factor	*1.00	*1.00	1.00	1.00	0.86	0.86	1.00	1.00	1.00	1.00	1.00	1.00
Frt					0.952	0.850			0.850			
Flt Protected	0.950							0.956				
Satd. Flow (prot)	3438	3619	0	0	4575	1362	0	1781	1583	0	0	0
Flt Permitted	0.075							0.956				
Satd. Flow (perm)	271	3619	0	0	4575	1362	0	1781	1583	0	0	0
Right Turn on Red			Yes			Yes			Yes			Yes
Satd. Flow (RTOR)					200	630			268			
Link Speed (mph)		45			45			35			45	
Link Distance (ft)		357			717			367			1313	
Travel Time (s)		5.4			10.9			7.1			19.9	
Peak Hour Factor	0.92	0.92	0.92	0.92	0.92	0.92	0.92	0.92	0.92	0.92	0.92	0.92
Heavy Vehicles (%)	5%	5%	2%	2%	2%	2%	2%	2%	2%	2%	2%	2%
Adj. Flow (vph)	518	1403	0	0	1563	1468	79	7	268	0	0	0
Shared Lane Traffic (%)						50%						
Lane Group Flow (vph)	518	1403	0	0	2297	734	0	86	268	0	0	0
Enter Blocked Intersection	No	No	No	No	No	No	No	No	No	No	No	No
Lane Alignment	Left	Left	Right	Left	Left	Right	Left	Left	Right	Left	Left	Right
Median Width(ft)		24			36			0			0	
Link Offset(ft)		18			-12			0			0	
Crosswalk Width(ft)		16			16			16			16	
Two way Left Turn Lane												
Headway Factor	1.00	1.00	1.00	1.00	1.00	1.00	1.00	1.00	1.00	1.00	1.00	1.00
Turning Speed (mph)	15		9	15		9	15		20	15		9
Number of Detectors	1	2			2	1	1	2	1			
Detector Template	Left	Thru			Thru	Right	Left	Thru	Right			
Leading Detector (ft)	20	100			100	20	20	100	20			
Trailing Detector (ft)	0	0			0	0	0	0	0			
Detector 1 Position(ft)	0	0			0	0	0	0	0			
Detector 1 Size(ft)	20	6			6	20	20	6	20			
Detector 1 Type	Cl+Ex	Cl+Ex			Cl+Ex	Cl+Ex	Cl+Ex	Cl+Ex	Cl+Ex			
Detector 1 Channel												
Detector 1 Extend (s)	0.0	0.0			0.0	0.0	0.0	0.0	0.0			
Detector 1 Queue (s)	0.0	0.0			0.0	0.0	0.0	0.0	0.0			
Detector 1 Delay (s)	0.0	0.0			0.0	0.0	0.0	0.0	0.0			
Detector 2 Position(ft)		94			94			94				
Detector 2 Size(ft)		6			6			6				
Detector 2 Type		Cl+Ex			Cl+Ex			Cl+Ex				
Detector 2 Channel												
Detector 2 Extend (s)		0.0			0.0			0.0				
Turn Type	pm+pt					Perm	Perm		Free			
Protected Phases	5	2			6			8				
Permitted Phases	2					6	8		Free			

Lanes, Volumes, Timings 2030 PM Peak_Build_Final - Added SBRT
1: Sunport Blvd & I-25 NB On-Ramp

7/8/2010

Lane Group	EBL	EBT	EBR	WBL	WBT	WBR	NBL	NBT	NBR	SBL	SBT	SBR
Detector Phase	5	2			6	6	8	8				
Switch Phase												
Minimum Initial (s)	10.0	10.0			10.0	10.0	10.0	10.0				
Minimum Split (s)	14.5	21.5			21.5	21.5	20.5	20.5				
Total Split (s)	16.3	69.4	0.0	0.0	53.1	53.1	20.6	20.6	0.0	0.0	0.0	0.0
Total Split (%)	18.1%	77.1%	0.0%	0.0%	59.0%	59.0%	22.9%	22.9%	0.0%	0.0%	0.0%	0.0%
Maximum Green (s)	11.8	63.9			47.6	47.6	16.1	16.1				
Yellow Time (s)	3.5	4.5			4.5	4.5	3.5	3.5				
All-Red Time (s)	1.0	1.0			1.0	1.0	1.0	1.0				
Lost Time Adjust (s)	0.0	0.0	0.0	0.0	0.0	0.0	0.0	0.0	0.0	0.0	0.0	0.0
Total Lost Time (s)	4.5	5.5	4.0	4.0	5.5	5.5	4.5	4.5	4.0	4.0	4.0	4.0
Lead/Lag	Lag				Lead	Lead						
Lead-Lag Optimize?	Yes				Yes	Yes						
Vehicle Extension (s)	3.0	3.0			3.0	3.0	3.0	3.0				
Recall Mode	None	C-Max			C-Max	C-Max	Max	Max				
Act Effct Green (s)	64.9	63.9			47.6	47.6		16.1	90.0			
Actuated g/C Ratio	0.72	0.71			0.53	0.53		0.18	1.00			
v/c Ratio	0.85	0.55			0.91	0.72		0.27	0.17			
Control Delay	38.1	8.7			24.7	7.1		34.5	0.2			
Queue Delay	0.0	2.4			0.0	0.0		0.0	0.0			
Total Delay	38.1	11.2			24.7	7.1		34.5	0.2			
LOS	D	B			C	A		C	A			
Approach Delay		18.4			20.4			8.6				
Approach LOS		B			C			A				
Queue Length 50th (ft)	80	250			406	33		43	0			
Queue Length 95th (ft)	m#143	305			#499	161		85	0			
Internal Link Dist (ft)		277			637			287			1233	
Turn Bay Length (ft)												
Base Capacity (vph)	611	2569			2514	1017		319	1583			
Starvation Cap Reductn	0	995			0	0		0	0			
Spillback Cap Reductn	0	0			0	0		0	0			
Storage Cap Reductn	0	0			0	0		0	0			
Reduced v/c Ratio	0.85	0.89			0.91	0.72		0.27	0.17			

Intersection Summary

Area Type: Other
Cycle Length: 90
Actuated Cycle Length: 90
Offset: 54 (60%), Referenced to phase 2:EBTL and 6:WBT, Start of Green
Natural Cycle: 90
Control Type: Actuated-Coordinated
Maximum v/c Ratio: 0.91
Intersection Signal Delay: 18.9 Intersection LOS: B
Intersection Capacity Utilization 115.4% ICU Level of Service H
Analysis Period (min) 15

* User Entered Value
\# 95th percentile volume exceeds capacity, queue may be longer.
Queue shown is maximum after two cycles.
m Volume for 95th percentile queue is metered by upstream signal.

Lanes, Volumes, Timings 2030 PM Peak_Build_Final - Added SBRT
5: Sunport Blvd & I-25 SB Off-Ramp

7/8/2010

Lane Group	EBL	EBT	EBR	WBL	WBT	WBR	NBL	NBT	NBR	SBL	SBT	SBR
Lane Configurations												
Volume (vph)	0	737	83	754	757	0	0	0	0	1031	7	118
Ideal Flow (vphpl)	1900	1900	1900	1900	1900	1900	1900	1900	1900	1900	1900	1900
Grade (%)		7%			0%			0%			0%	
Storage Length (ft)	150		150	0		0	0		0	0		0
Storage Lanes	1		1	2		0	0		0	2		1
Taper Length (ft)	25		25	25		25	25		25	25		25
Lane Util. Factor	1.00	*1.00	1.00	0.97	0.95	1.00	1.00	1.00	1.00	0.97	0.95	0.95
Frt			0.850								0.868	0.850
Flt Protected				0.950						0.950		
Satd. Flow (prot)	0	5000	1417	3433	3539	0	0	0	0	3433	1536	1504
Flt Permitted				0.214						0.950		
Satd. Flow (perm)	0	5000	1417	773	3539	0	0	0	0	3433	1536	1504
Right Turn on Red			Yes			Yes			Yes			Yes
Satd. Flow (RTOR)			90								60	68
Link Speed (mph)		45			45			45			35	
Link Distance (ft)		1010			357			475			825	
Travel Time (s)		15.3			5.4			7.2			16.1	
Peak Hour Factor	0.92	0.92	0.92	0.92	0.92	0.92	0.92	0.92	0.92	0.92	0.92	0.92
Heavy Vehicles (%)	2%	10%	10%	2%	2%	2%	2%	2%	2%	2%	2%	2%
Adj. Flow (vph)	0	801	90	820	823	0	0	0	0	1121	8	128
Shared Lane Traffic (%)												47%
Lane Group Flow (vph)	0	801	90	820	823	0	0	0	0	1121	68	68
Enter Blocked Intersection	No	No	No	No	No	No	No	No	No	No	No	No
Lane Alignment	Left	Right	Right	Right	Left	Right	Left	Left	Right	Right	Left	Right
Median Width(ft)		36			24			24			24	
Link Offset(ft)		-12			24			0			0	
Crosswalk Width(ft)		16			16			16			16	
Two way Left Turn Lane												
Headway Factor	1.05	1.05	1.05	1.00	1.00	1.00	1.00	1.00	1.00	1.00	1.00	1.00
Turning Speed (mph)	15		9	15		9	15		9	15		9
Number of Detectors		2	1	1	2					1	2	1
Detector Template		Thru	Right	Left	Thru					Left	Thru	Right
Leading Detector (ft)		100	20	20	100					20	100	20
Trailing Detector (ft)		0	0	0	0					0	0	0
Detector 1 Position(ft)		0	0	0	0					0	0	0
Detector 1 Size(ft)		6	20	20	6					20	6	20
Detector 1 Type		Cl+Ex	Cl+Ex	Cl+Ex	Cl+Ex					Cl+Ex	Cl+Ex	Cl+Ex
Detector 1 Channel												
Detector 1 Extend (s)		0.0	0.0	0.0	0.0					0.0	0.0	0.0
Detector 1 Queue (s)		0.0	0.0	0.0	0.0					0.0	0.0	0.0
Detector 1 Delay (s)		0.0	0.0	0.0	0.0					0.0	0.0	0.0
Detector 2 Position(ft)		94			94						94	
Detector 2 Size(ft)		6			6						6	
Detector 2 Type		Cl+Ex			Cl+Ex						Cl+Ex	
Detector 2 Channel												
Detector 2 Extend (s)		0.0			0.0						0.0	
Turn Type			Perm	pm+pt						Perm		Perm
Protected Phases		2		1	6						4	

Lanes, Volumes, Timings 2030 PM Peak_Build_Final - Added SBRT
5: Sunport Blvd & I-25 SB Off-Ramp

7/8/2010

Lane Group	EBL	EBT	EBR	WBL	WBT	WBR	NBL	NBT	NBR	SBL	SBT	SBR
Permitted Phases			2	6						4		4
Detector Phase		2	2	1	6					4	4	4
Switch Phase												
Minimum Initial (s)		10.0	10.0	10.0	10.0					10.0	10.0	10.0
Minimum Split (s)		21.5	21.5	14.5	21.5					20.5	20.5	20.5
Total Split (s)	0.0	25.8	25.8	25.1	50.9	0.0	0.0	0.0	0.0	39.1	39.1	39.1
Total Split (%)	0.0%	28.7%	28.7%	27.9%	56.6%	0.0%	0.0%	0.0%	0.0%	43.4%	43.4%	43.4%
Maximum Green (s)		20.3	20.3	20.6	45.4					34.6	34.6	34.6
Yellow Time (s)		4.5	4.5	3.5	4.5					3.5	3.5	3.5
All-Red Time (s)		1.0	1.0	1.0	1.0					1.0	1.0	1.0
Lost Time Adjust (s)	0.0	0.0	0.0	0.0	0.0	0.0	0.0	0.0	0.0	0.0	0.0	0.0
Total Lost Time (s)	4.0	5.5	5.5	4.5	5.5	4.0	4.0	4.0	4.0	4.5	4.5	4.5
Lead/Lag		Lag	Lag	Lead								
Lead-Lag Optimize?		Yes	Yes	Yes								
Vehicle Extension (s)		3.0	3.0	3.0	3.0					3.0	3.0	3.0
Recall Mode		C-Max	C-Max	None	C-Max					Max	Max	Max
Act Effct Green (s)		22.0	22.0	46.4	45.4					34.6	34.6	34.6
Actuated g/C Ratio		0.24	0.24	0.52	0.50					0.38	0.38	0.38
v/c Ratio		0.65	0.22	0.86	0.46					0.85	0.11	0.11
Control Delay		31.2	8.2	14.6	5.6					32.9	6.5	5.3
Queue Delay		0.0	0.0	1.6	0.9					0.5	0.0	0.0
Total Delay		31.2	8.2	16.2	6.5					33.4	6.5	5.3
LOS		C	A	B	A					C	A	A
Approach Delay		28.9			11.3						30.4	
Approach LOS		C			B						C	
Queue Length 50th (ft)		132	4	84	84					294	3	0
Queue Length 95th (ft)		165	m14	m130	m88					#381	30	27
Internal Link Dist (ft)		930			277			395			745	
Turn Bay Length (ft)			150									
Base Capacity (vph)		1224	415	1007	1785					1320	627	620
Starvation Cap Reductn		0	0	72	634					0	0	0
Spillback Cap Reductn		0	0	0	0					33	0	0
Storage Cap Reductn		0	0	0	0					0	0	0
Reduced v/c Ratio		0.65	0.22	0.88	0.72					0.87	0.11	0.11

Intersection Summary

Area Type: Other
Cycle Length: 90
Actuated Cycle Length: 90
Offset: 5 (6%), Referenced to phase 2:EBT and 6:WBTL, Start of Green
Natural Cycle: 75
Control Type: Actuated-Coordinated
Maximum v/c Ratio: 0.86
Intersection Signal Delay: 21.8 Intersection LOS: C
Intersection Capacity Utilization 115.4% ICU Level of Service H
Analysis Period (min) 15
* User Entered Value
\# 95th percentile volume exceeds capacity, queue may be longer.
Queue shown is maximum after two cycles.

Lanes, Volumes, Timings 2030 PM Peak_Build_Final - Added SBRT
13: Sunport Blvd & Broadway Blvd

7/8/2010

Lane Group	EBL	EBT	EBR	WBL	WBT	WBR	NBL	NBT	NBR	SBL	SBT	SBR
Lane Configurations												
Volume (vph)	75	208	249	474	258	143	170	364	280	332	714	222
Ideal Flow (vphpl)	1900	1900	1900	1900	1900	1900	1900	1900	1900	1900	1900	1900
Storage Length (ft)	175		125	175		125	225		0	225		0
Storage Lanes	1		1	1		1	1		0	1		0
Taper Length (ft)	25		25	25		25	25		25	25		25
Lane Util. Factor	1.00	1.00	1.00	0.97	1.00	1.00	1.00	0.95	0.95	1.00	0.95	0.95
Frt			0.850			0.850		0.935			0.964	
Flt Protected	0.950			0.950			0.950			0.950		
Satd. Flow (prot)	1770	1863	1583	3433	1863	1583	1770	3267	0	1719	3412	0
Flt Permitted	0.474			0.291			0.176			0.198		
Satd. Flow (perm)	883	1863	1583	1052	1863	1583	328	3267	0	358	3412	0
Right Turn on Red			Yes			Yes			Yes			Yes
Satd. Flow (RTOR)			271			155		210			53	
Link Speed (mph)		30			45			30			30	
Link Distance (ft)		406			1491			828			703	
Travel Time (s)		9.2			22.6			18.8			16.0	
Peak Hour Factor	0.92	0.92	0.92	0.92	0.92	0.92	0.92	0.92	0.92	0.92	0.92	0.92
Heavy Vehicles (%)	2%	2%	2%	2%	2%	2%	2%	2%	5%	5%	2%	2%
Adj. Flow (vph)	82	226	271	515	280	155	185	396	304	361	776	241
Shared Lane Traffic (%)												
Lane Group Flow (vph)	82	226	271	515	280	155	185	700	0	361	1017	0
Enter Blocked Intersection	No	No	No	No	No	No	No	No	No	No	No	No
Lane Alignment	Left	Left	Right	Left	Left	Right	Left	Left	Right	Left	Left	Right
Median Width(ft)		24			24			18			12	
Link Offset(ft)		0			0			0			0	
Crosswalk Width(ft)		16			16			16			16	
Two way Left Turn Lane												
Headway Factor	1.00	1.00	1.00	1.00	1.00	1.00	1.00	1.00	1.00	1.00	1.00	1.00
Turning Speed (mph)	15		9	15		9	15		9	15		9
Number of Detectors	1	2	1	1	2	1	1	2		1	2	
Detector Template	Left	Thru	Right	Left	Thru	Right	Left	Thru		Left	Thru	
Leading Detector (ft)	20	100	20	20	100	20	20	100		20	100	
Trailing Detector (ft)	0	0	0	0	0	0	0	0		0	0	
Detector 1 Position(ft)	0	0	0	0	0	0	0	0		0	0	
Detector 1 Size(ft)	20	6	20	20	6	20	20	6		20	6	
Detector 1 Type	Cl+Ex	Cl+Ex	Cl+Ex	Cl+Ex	Cl+Ex	Cl+Ex	Cl+Ex	Cl+Ex		Cl+Ex	Cl+Ex	
Detector 1 Channel												
Detector 1 Extend (s)	0.0	0.0	0.0	0.0	0.0	0.0	0.0	0.0		0.0	0.0	
Detector 1 Queue (s)	0.0	0.0	0.0	0.0	0.0	0.0	0.0	0.0		0.0	0.0	
Detector 1 Delay (s)	0.0	0.0	0.0	0.0	0.0	0.0	0.0	0.0		0.0	0.0	
Detector 2 Position(ft)		94			94			94			94	
Detector 2 Size(ft)		6			6			6			6	
Detector 2 Type		Cl+Ex			Cl+Ex			Cl+Ex			Cl+Ex	
Detector 2 Channel												
Detector 2 Extend (s)		0.0			0.0			0.0			0.0	
Turn Type	pm+pt		Perm	pm+pt		Perm	pm+pt			pm+pt		
Protected Phases	7	4		3	8		5	2		1	6	
Permitted Phases	4		4	8		8	2			6		

Lanes, Volumes, Timings 2030 PM Peak_Build_Final - Added SBRT
13: Sunport Blvd & Broadway Blvd

7/8/2010

Lane Group	EBL	EBT	EBR	WBL	WBT	WBR	NBL	NBT	NBR	SBL	SBT	SBR
Detector Phase	7	4	4	3	8	8	5	2		1	6	
Switch Phase												
Minimum Initial (s)	7.0	10.0	10.0	7.0	10.0	10.0	7.0	10.0		7.0	10.0	
Minimum Split (s)	11.5	20.5	20.5	11.5	20.5	20.5	11.5	20.5		11.5	20.5	
Total Split (s)	11.6	21.0	21.0	15.4	24.8	24.8	15.0	28.6	0.0	25.0	38.6	0.0
Total Split (%)	12.9%	23.3%	23.3%	17.1%	27.6%	27.6%	16.7%	31.8%	0.0%	27.8%	42.9%	0.0%
Maximum Green (s)	7.1	16.5	16.5	10.9	20.3	20.3	10.5	24.1		20.5	34.1	
Yellow Time (s)	3.5	3.5	3.5	3.5	3.5	3.5	3.5	3.5		3.5	3.5	
All-Red Time (s)	1.0	1.0	1.0	1.0	1.0	1.0	1.0	1.0		1.0	1.0	
Lost Time Adjust (s)	0.0	0.0	0.0	0.0	0.0	0.0	0.0	0.0	0.0	0.0	0.0	0.0
Total Lost Time (s)	4.5	4.5	4.5	4.5	4.5	4.5	4.5	4.5	4.0	4.5	4.5	4.0
Lead/Lag	Lead	Lag	Lag	Lead	Lag	Lag	Lead	Lag		Lead	Lag	
Lead-Lag Optimize?												
Vehicle Extension (s)	3.0	3.0	3.0	3.0	3.0	3.0	3.0	3.0		3.0	3.0	
Recall Mode	None	None	None	None	None	None	None	C-Max		None	C-Max	
Walk Time (s)		5.0	5.0		5.0	5.0		5.0			5.0	
Flash Dont Walk (s)		11.0	11.0		11.0	11.0		11.0			11.0	
Pedestrian Calls (#/hr)		0	0		0	0		0			0	
Act Effct Green (s)	21.8	14.7	14.7	29.6	20.9	20.9	38.5	29.2		50.7	37.0	
Actuated g/C Ratio	0.24	0.16	0.16	0.33	0.23	0.23	0.43	0.32		0.56	0.41	
v/c Ratio	0.29	0.74	0.56	0.81	0.65	0.32	0.64	0.58		0.78	0.71	
Control Delay	23.3	50.7	9.1	17.7	21.6	6.2	26.1	20.8		26.9	24.9	
Queue Delay	0.0	0.0	0.0	0.0	0.0	0.0	0.0	0.0		0.0	0.0	
Total Delay	23.3	50.7	9.1	17.7	21.6	6.2	26.1	20.8		26.9	24.9	
LOS	C	D	A	B	C	A	C	C		C	C	
Approach Delay		27.4			17.0			21.9			25.4	
Approach LOS		C			B			C			C	
Queue Length 50th (ft)	31	121	0	17	133	37	50	126		112	247	
Queue Length 95th (ft)	63	#200	65	#68	212	67	110	193		213	326	
Internal Link Dist (ft)		326			1411			748			623	
Turn Bay Length (ft)	175		125	175		125	225			225		
Base Capacity (vph)	285	342	512	634	443	494	313	1201		512	1433	
Starvation Cap Reductn	0	0	0	0	0	0	0	0		0	0	
Spillback Cap Reductn	0	0	0	0	0	0	0	0		0	0	
Storage Cap Reductn	0	0	0	0	0	0	0	0		0	0	
Reduced v/c Ratio	0.29	0.66	0.53	0.81	0.63	0.31	0.59	0.58		0.71	0.71	

Intersection Summary

Area Type: Other
Cycle Length: 90
Actuated Cycle Length: 90
Offset: 84 (93%), Referenced to phase 2:NBTL and 6:SBTL, Start of Green
Natural Cycle: 75
Control Type: Actuated-Coordinated
Maximum v/c Ratio: 0.81
Intersection Signal Delay: 22.8 Intersection LOS: C
Intersection Capacity Utilization 76.9% ICU Level of Service D
Analysis Period (min) 15
95th percentile volume exceeds capacity, queue may be longer.

Exhibit 2:
CAL3QHC Link and Receptor Information

2012 Emission Factors, 2030 Volumes AM Build

Northbound I-25 and Sunport

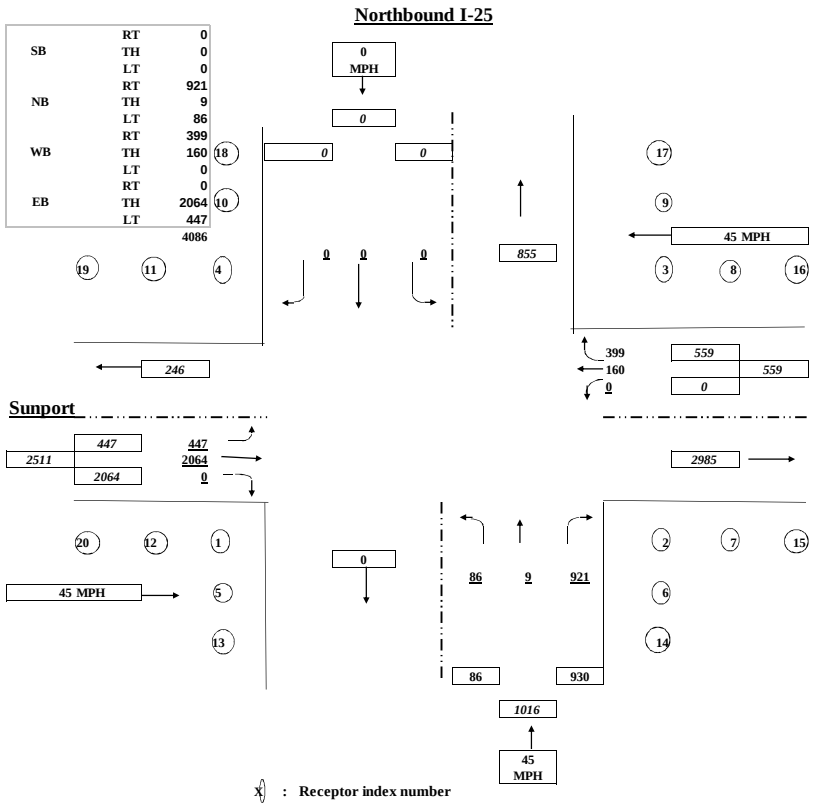

X : Receptor index number

: Approaching speed

C:\data\air\sunport\1 Sunport-NorthBi25\[14.XLS]A

INTERSECTION CONFIGURATION , SIGNAL SETTING, AND EMISSION FACTOR

	EBL	EBT	EBR	WBL	WBT	WBR	NBL	NBT	NBR	SBL	SBT	SBR
LeftTurn Code*	1			1			2			2		
No. of Lanes	2	2	0	0	3	1	0	1	1	0	0	0
Lane Width (ft)	12	12	12	12	12	12	12	12	12	12	12	12
Median (ft)		4			4			0			0	
Offset Receptors and Lanes		0			0			0			0	
Cycle Length (sec)	110	110	110	110	110	110	110	110	110	110	110	110
1st Permitted Phase (inc yellow)	14.6	89.5		0	74.9	74.9	20.5	20.5		0	0	
2nd Permitted Phase (inc yellow)												
3rd Permitted Phase (inc yellow)												
Red Time (sec)	90.9	20.5	NA	NA	35.1	35.1	NA	89.5	110.0	NA	NA	NA
Lost Time (Incld'd. above)	4.5	5.5	NA	NA	5.5	5.5	NA	4.5		NA	NA	NA
Saturation Flow Rate (vphpl)	1900	1900	NA	NA	1900	1900	NA	1900	1900	NA	NA	NA
Speed (mph)	45			NA			NA			NA		

* Left Turn Code : 1 - Exclusive left 2 - Left shared with through (IF 2 WBL should not be counted as a lane i.e. all LT lanes should be tallied under through)

Quee Links 800
Freeflow Links 1000

CALCULATION OF RECEPTOR'S COORDINATES

	COORDINATES			
RECEPTOR	X	Y	X	Y
#1			-16	-54
#2			46	-42
#3			28	66
#4			-16	66
#5			-16	-134
#6			46	-122
#7			126	-42
#8			108	66
#9			28	146
#10			-16	146
#11			-96	66
#12			-96	-54
#13			-16	-254
#14			46	-242
#15			246	-42
#16			228	66
#17			28	266
#18			-16	266
#19			-216	66
#20			-216	-54

Number of Links 13

CALCULATION OF LINK COORDINATES (w/ widths and lanes)

LINK	X1	Y1	X2	Y2	Width	Lanes
EB Approach	-1000	-26	0	-26	44	2
EB Departure	0	-14	1000	-14	44	2
EB Left	-1000	-2	0	-2	44	2
WB Approach	1000	20	0	20	68	4
WB Departure	0	32	-1000	32	56	3
WB Left	1000	2	0	2	20	0
NB Approach	12	-1000	12	0	44	2
NB Departure	6	0	6	1000	32	1
NB Left	shared	shared	shared	shared	shared	shared
SB Approach	0	1000	0	0	20	0
SB Departure	0	0	0	-1000	20	0
SB Left	shared	shared	shared	shared	shared	shared
EB Left Queue	-6	-2	-806	-2	24	2
EB Through Queue	-6	-26	-806	-26	24	2
EB Right Queue	shared	shared	shared	shared	0	0
WB Left Queue	18	2	818	2	0	0
WB Through Queu	18	20	818	20	36	3
WB Right Queue	18	44	818	44	12	1
NB Left Queue	shared	shared	shared	-800	0	0
NB Through Queue	12	-32	12	-832	12	1
NB Right Queue	24	-32	24	-832	12	1
SB Left Queue	shared	shared	shared	800	0	0
SB Through Queue	0	56	0	856	0	0
SB Right Queue	shared	shared	shared	shared	0	0

2012 Emission Factors, 2030 Volumes PM Build

Northbound I-25 and Sunport

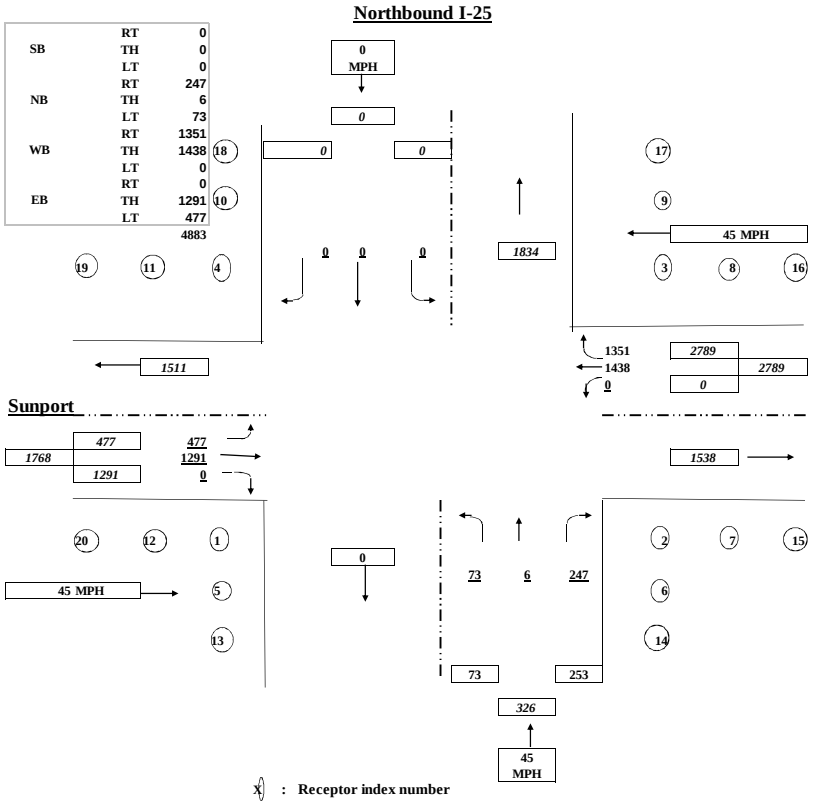

X : Receptor index number

: Approaching speed

C:\data\air\sunport\1 Sunport-NorthBi25\[16.xls]A

INTERSECTION CONFIGURATION , SIGNAL SETTING, AND EMISSION FACTOR

	EBL	EBT	EBR	WBL	WBT	WBR	NBL	NBT	NBR	SBL	SBT	SBR
LeftTurn Code*	1			1			2			2		
No. of Lanes	2	2	0	0	3	1	0	1	1	0	0	0
Lane Width (ft)	12	12	12	12	12	12	12	12	12	12	12	12
Median (ft)		4			4			0			0	
Offset Receptors and Lanes		0			0			0			0	
Cycle Length (sec)	90	90	90	90	90	90	90	90	90	90	90	90
1st Permitted Phase (inc yellow)	16.3	69.4		0	53.1	53.1	20.6	0.6		0	0	
2nd Permitted Phase (inc yellow)												
3rd Permitted Phase (inc yellow)												
Red Time (sec)	73.7	20.6	NA	NA	36.9	36.9	NA	89.4	90.0	NA	NA	NA
Lost Time (Incld'd. above)	4.5	5.5	NA	NA	5.5	5.5	NA	4.5		NA	NA	NA
Saturation Flow Rate (vphpl)	1900	1900	NA	NA	1900	1900	NA	1900	1900	NA	NA	NA
Speed (mph)	45			NA			NA			NA		

* Left Turn Code : 1 - Exclusive left 2 - Left shared with through (IF 2 WBL should not be counted as a lane i.e. all LT lanes should be tallied under through)

Quee Links 800
Freeflow Links 1000

CALCULATION OF RECEPTOR'S COORDINATES

	COORDINATES			
RECEPTOR	X	Y	X	Y
#1			-16	-54
#2			46	-42
#3			28	66
#4			-16	66
#5			-16	-134
#6			46	-122
#7			126	-42
#8			108	66
#9			28	146
#10			-16	146
#11			-96	66
#12			-96	-54
#13			-16	-254
#14			46	-242
#15			246	-42
#16			228	66
#17			28	266
#18			-16	266
#19			-216	66
#20			-216	-54

Number of Links 13

CALCULATION OF LINK COORDINATES (w/ widths and lanes)

LINK	X1	Y1	X2	Y2	Width	Lanes
EB Approach	-1000	-26	0	-26	44	2
EB Departure	0	-14	1000	-14	44	2
EB Left	-1000	-2	0	-2	44	2
WB Approach	1000	20	0	20	68	4
WB Departure	0	32	-1000	32	56	3
WB Left	1000	2	0	2	20	0
NB Approach	12	-1000	12	0	44	2
NB Departure	6	0	6	1000	32	1
NB Left	shared	shared	shared	shared	shared	shared
SB Approach	0	1000	0	0	20	0
SB Departure	0	0	0	-1000	20	0
SB Left	shared	shared	shared	shared	shared	shared
EB Left Queue	-6	-2	-806	-2	24	2
EB Through Queue	-6	-26	-806	-26	24	2
EB Right Queue	shared	shared	shared	shared	0	0
WB Left Queue	18	2	818	2	0	0
WB Through Queu	18	20	818	20	36	3
WB Right Queue	18	44	818	44	12	1
NB Left Queue	shared	shared	shared	-800	0	0
NB Through Queue	12	-32	12	-832	12	1
NB Right Queue	24	-32	24	-832	12	1
SB Left Queue	shared	shared	shared	800	0	0
SB Through Queue	0	56	0	856	0	0
SB Right Queue	shared	shared	shared	shared	0	0

2012 Emission Factors, 2030 Volumes AM Build

Southbound I-25 and Sunport Blvd

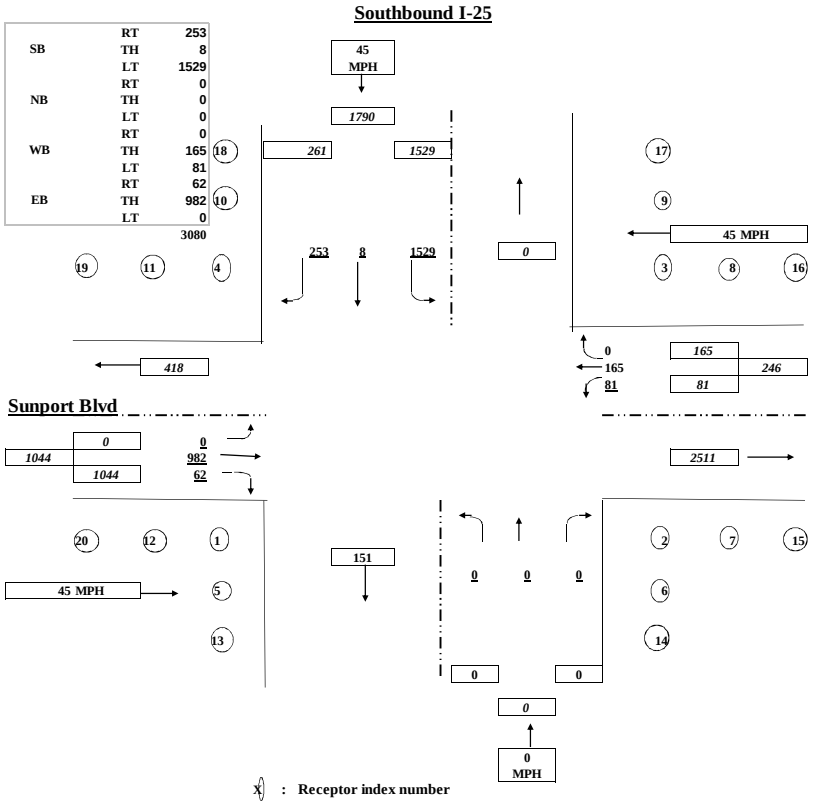

X : Receptor index number

: Approaching speed

C:\data\air\sunport\2 Sunport-SouthBi25\[24.XLS]A

INTERSECTION CONFIGURATION , SIGNAL SETTING, AND EMISSION FACTOR

	EBL	EBT	EBR	WBL	WBT	WBR	NBL	NBT	NBR	SBL	SBT	SBR
LeftTurn Code*	1			1			1			1		
No. of Lanes	0	3	1	2	2	0	0	0	0	2	1	1
Lane Width (ft)	12	12	12	12	12	12	12	12	12	12	12	12
Median (ft)		4			4			0			0	
Offset Receptors and Lanes		0			0			0			0	
Cycle Length (sec)	110	110	110	110	110	110	110	110	110	110	110	110
1st Permitted Phase (inc yellow)	0	32.4	32.4	14.5	46.9	0	0	0	0	63.1	63.1	63.1
2nd Permitted Phase (inc yellow)												
3rd Permitted Phase (inc yellow)												
Red Time (sec)	NA	77.6	77.6	95.5	63.1	NA	NA	NA	NA	46.9	46.9	46.9
Lost Time (Incld'd. above)	0.0	5.5	5.5	4.5	5.5	NA	NA	NA	NA	4.5	4.5	4.5
Saturation Flow Rate (vphpl)	1900	1900	1900	1900	1900	NA	NA	NA	NA	1900	1900	1900
Speed (mph)	45			45			NA			45		

* Left Turn Code : 1 - Exclusive left 2 - Left shared with through (IF 2 WBL should not be counted as a lane i.e. all LT lanes should be tallied under through)

Quee Links 800
Freeflow Links 1000

CALCULATION OF RECEPTOR'S COORDINATES

	COORDINATES			
RECEPTOR	X	Y	X	Y
#1			-28	-66
#2			16	-66
#3			28	54
#4			-52	42
#5			-28	-146
#6			16	-146
#7			96	-66
#8			108	54
#9			28	134
#10			-52	122
#11			-132	42
#12			-108	-66
#13			-28	-266
#14			16	-266
#15			216	-66
#16			228	54
#17			28	254
#18			-52	242
#19			-252	42
#20			-228	-66

Number of Links 15

CALCULATION OF LINK COORDINATES (w/ widths and lanes)

LINK	X1	Y1	X2	Y2	Width	Lanes
EB Approach	-1000	-20	0	-20	68	4
EB Departure	0	-32	1000	-32	56	3
EB Left	-1000	-2	0	-2	20	0
WB Approach	1000	26	0	26	44	2
WB Departure	0	14	-1000	14	44	2
WB Left	1000	2	0	2	44	2
NB Approach	0	-1000	0	0	20	0
NB Departure	12	0	12	1000	20	0
NB Left	0	-1000	0	0	20	0
SB Approach	-18	1000	-18	0	44	2
SB Departure	-6	0	-6	-1000	32	1
SB Left	0	1000	0	0	44	2
EB Left Queue	-18	-2	-818	-2	0	0
EB Through Queue	-18	-20	-818	-20	36	3
EB Right Queue	-18	-44	-818	-44	12	1
WB Left Queue	18	2	818	2	24	2
WB Through Queu	18	26	818	26	24	2
WB Right Queue	shared	shared	800	shared	0	0
NB Left Queue	0	-56	0	-856	0	0
NB Through Queue	0	-56	0	-856	0	0
NB Right Queue	shared	shared	shared	shared	0	0
SB Left Queue	0	32	0	832	24	2
SB Through Queue	-18	32	-18	832	12	1
SB Right Queue	-30	32	-30	832	12	1

2012 Emission Factors, 2030 Volumes PM Build

Southbound I-25 and Sunport Blvd

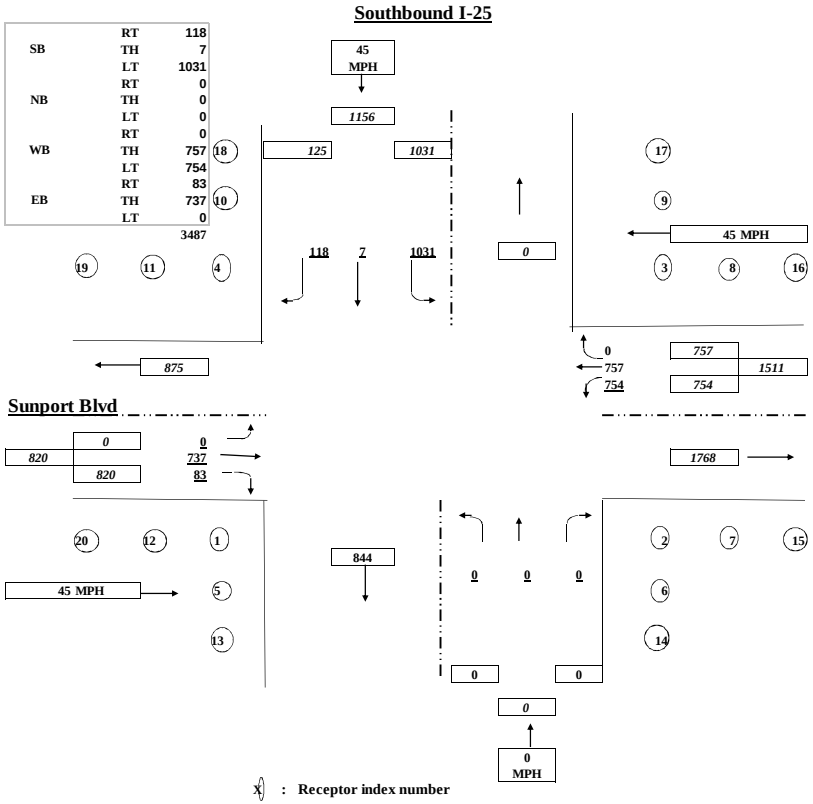

X : Receptor index number

: Approaching speed

C:\data\air\sunport\2 Sunport-SouthBi25\[26.XLS]A

INTERSECTION CONFIGURATION , SIGNAL SETTING, AND EMISSION FACTOR

	EBL	EBT	EBR	WBL	WBT	WBR	NBL	NBT	NBR	SBL	SBT	SBR
LeftTurn Code*	1			1			1			1		
No. of Lanes	0	3	1	2	2	0	0	0	0	2	1	1
Lane Width (ft)	12	12	12	12	12	12	12	12	12	12	12	12
Median (ft)		4			4			0			0	
Offset Receptors and Lanes		0			0			0			0	
Cycle Length (sec)	90	90	90	90	90	90	90	90	90	90	90	90
1st Permitted Phase (inc yellow)	0	25.8	25.8	25.1	50.9	0	0	0	0	39.1	39.1	39.1
2nd Permitted Phase (inc yellow)												
3rd Permitted Phase (inc yellow)												
Red Time (sec)	NA	64.2	64.2	64.9	39.1	NA	NA	NA	NA	50.9	50.9	50.9
Lost Time (Incld'd. above)	0.0	5.5	5.5	4.5	5.5	NA	NA	NA	NA	4.5	4.5	4.5
Saturation Flow Rate (vphpl)	1900	1900	1900	1900	1900	NA	NA	NA	NA	1900	1900	1900
Speed (mph)	45			45			NA			45		

* Left Turn Code : 1 - Exclusive left 2 - Left shared with through (IF 2 WBL should not be counted as a lane i.e. all LT lanes should be tallied under through)

Quee Links 800
Freeflow Links 1000

CALCULATION OF RECEPTOR'S COORDINATES

	COORDINATES			
RECEPTOR	X	Y	X	Y
#1			-28	-66
#2			16	-66
#3			28	54
#4			-52	42
#5			-28	-146
#6			16	-146
#7			96	-66
#8			108	54
#9			28	134
#10			-52	122
#11			-132	42
#12			-108	-66
#13			-28	-266
#14			16	-266
#15			216	-66
#16			228	54
#17			28	254
#18			-52	242
#19			-252	42
#20			-228	-66

Number of Links 15

CALCULATION OF LINK COORDINATES (w/ widths and lanes)

LINK	X1	Y1	X2	Y2	Width	Lanes
EB Approach	-1000	-20	0	-20	68	4
EB Departure	0	-32	1000	-32	56	3
EB Left	-1000	-2	0	-2	20	0
WB Approach	1000	26	0	26	44	2
WB Departure	0	14	-1000	14	44	2
WB Left	1000	2	0	2	44	2
NB Approach	0	-1000	0	0	20	0
NB Departure	12	0	12	1000	20	0
NB Left	0	-1000	0	0	20	0
SB Approach	-18	1000	-18	0	44	2
SB Departure	-6	0	-6	-1000	32	1
SB Left	0	1000	0	0	44	2
EB Left Queue	-18	-2	-818	-2	0	0
EB Through Queue	-18	-20	-818	-20	36	3
EB Right Queue	-18	-44	-818	-44	12	1
WB Left Queue	18	2	818	2	24	2
WB Through Queu	18	26	818	26	24	2
WB Right Queue	shared	shared	800	shared	0	0
NB Left Queue	0	-56	0	-856	0	0
NB Through Queue	0	-56	0	-856	0	0
NB Right Queue	shared	shared	shared	shared	0	0
SB Left Queue	0	32	0	832	24	2
SB Through Queue	-18	32	-18	832	12	1
SB Right Queue	-30	32	-30	832	12	1

2012 Emission Factors, 2030 Volumes AM Build

Broadway Blvd and Sunport Blvd

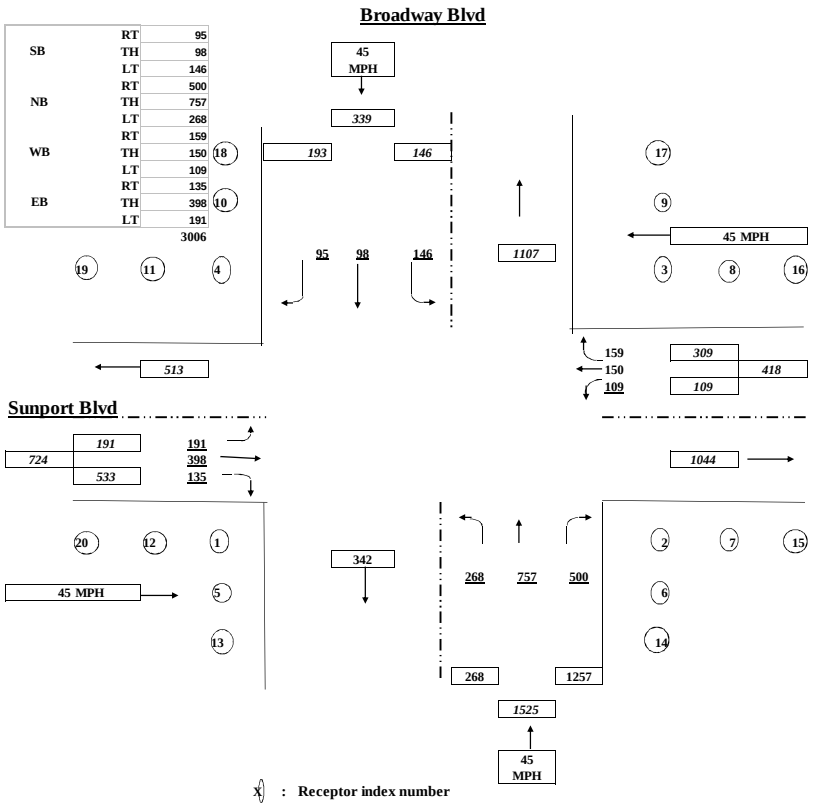

X : Receptor index number

: Approaching speed

C:\data\air\sunport\3 Sunport-Broadway\[34.xls]A

INTERSECTION CONFIGURATION , SIGNAL SETTING, AND EMISSION FACTOR

	EBL	EBT	EBR	WBL	WBT	WBR	NBL	NBT	NBR	SBL	SBT	SBR
LeftTurn Code*	1			1			1			1		
No. of Lanes	1	1	1	2	1	1	1	2	0	1	2	0
Lane Width (ft)	12	12	12	12	12	12	12	12	12	12	12	12
Median (ft)		4			4			4			4	
Offset Receptors and Lanes		0			0			0			0	
Cycle Length (sec)	110	110	110	110	110	110	110	110	110	110	110	110
1st Permitted Phase (inc yellow)	32	32	32	32	32	32	28	28		28	28	
2nd Permitted Phase (inc yellow)												
3rd Permitted Phase (inc yellow)												
Red Time (sec)	78.0	78.0	78.0	78.0	78.0	78.0	82.0	82.0	NA	82.0	82.0	NA
Lost Time (Incld'd. above)	4.5	4.5	4.5	4.5	4.5	4.5	4.5	4.5	NA	4.5	4.5	NA
Saturation Flow Rate (vphpl)	1900	1900	1900	1900	1900	1900	1900	1900	NA	1900	1900	NA
Speed (mph)		45			45			45			45	

* Left Turn Code : 1 - Exclusive left 2 - Left shared with through (IF 2 WBL should not be counted as a lane i.e. all LT lanes should be tallied under through)

Quee Links 800
Freeflow Links 1000

CALCULATION OF RECEPTOR'S COORDINATES

	COORDINATES			
RECEPTOR	X	Y	X	Y
#1			-48	-48
#2			48	-42
#3			48	54
#4			-48	36
#5			-48	-128
#6			48	-122
#7			128	-42
#8			128	54
#9			48	134
#10			-48	116
#11			-128	36
#12			-128	-48
#13			-48	-248
#14			48	-242
#15			248	-42
#16			248	54
#17			48	254
#18			-48	236
#19			-248	36
#20			-248	-48

Number of Links 22

CALCULATION OF LINK COORDINATES (w/ widths and lanes)

LINK	X1	Y1	X2	Y2	Width	Lanes
EB Approach	-1000	-14	0	-14	44	2
EB Departure	0	-20	1000	-20	32	1
EB Left	-1000	-2	0	-2	32	1
WB Approach	1000	20	0	20	44	2
WB Departure	0	14	-1000	14	32	1
WB Left	1000	2	0	2	44	2
NB Approach	20	-1000	20	0	44	2
NB Departure	20	0	20	1000	44	2
NB Left	2	-1000	2	0	32	1
SB Approach	-20	1000	-20	0	44	2
SB Departure	-20	0	-20	-1000	44	2
SB Left	-2	1000	-2	0	32	1
EB Left Queue	-38	-2	-838	-2	12	1
EB Through Queue	-38	-14	-838	-14	12	1
EB Right Queue	-38	-26	-838	-26	12	1
WB Left Queue	38	2	838	2	24	2
WB Through Queu	38	20	838	20	12	1
WB Right Queue	38	32	838	32	12	1
NB Left Queue	2	-32	2	-832	12	1
NB Through Queue	20	-32	20	-832	24	2
NB Right Queue	shared	shared	shared	shared	0	0
SB Left Queue	-2	26	-2	826	12	1
SB Through Queue	-20	26	-20	826	24	2
SB Right Queue	shared	shared	shared	shared	0	0

2012 Emission Factors, 2030 Volumes PM Build

Broadway Blvd and Sunport Blvd

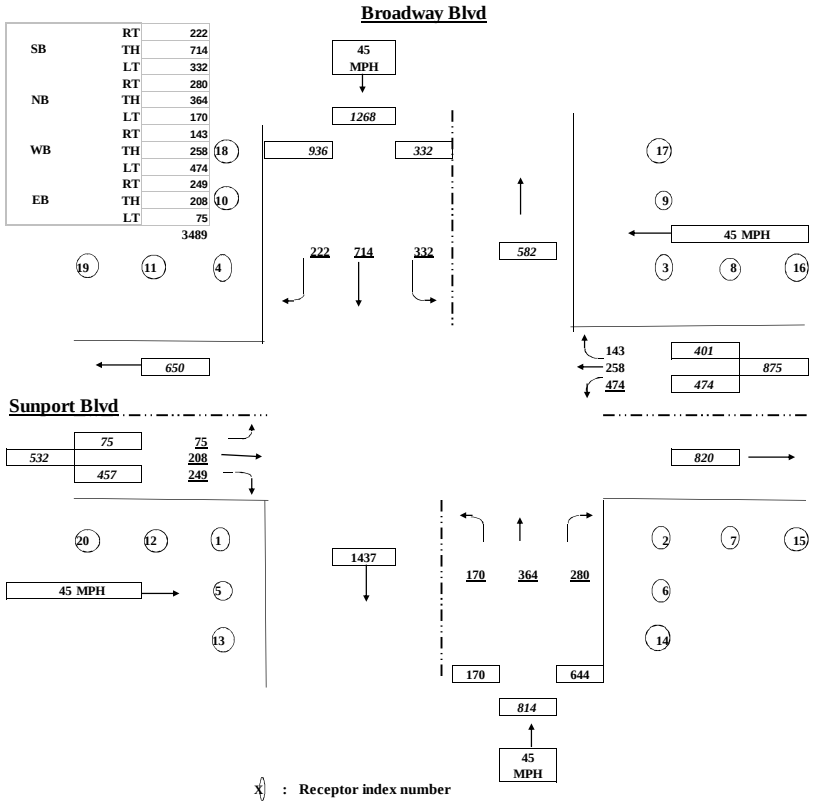

C:\data\air\sunport\3 Sunport-Broadway\[36.XLS]A

INTERSECTION CONFIGURATION , SIGNAL SETTING, AND EMISSION FACTOR

	EBL	EBT	EBR	WBL	WBT	WBR	NBL	NBT	NBR	SBL	SBT	SBR
LeftTurn Code*	1			1			1			1		
No. of Lanes	1	1	1	2	1	1	1	2	0	1	2	0
Lane Width (ft)	12	12	12	12	12	12	12	12	12	12	12	12
Median (ft)		4			4			4			4	
Offset Receptors and Lanes		0			0			0			0	
Cycle Length (sec)	90	90	90	90	90	90	90	90	90	90	90	90
1st Permitted Phase (inc yellow)	11.6	21	21	15.4	24.8	24.8	15	28.6		25	38.6	
2nd Permitted Phase (inc yellow)												
3rd Permitted Phase (inc yellow)												
Red Time (sec)	78.4	69.0	69.0	74.6	65.2	65.2	75.0	61.4	NA	65.0	51.4	NA
Lost Time (Incld'd. above)	4.5	4.5	4.5	4.5	4.5	4.5	4.5	4.5	NA	4.5	4.5	NA
Saturation Flow Rate (vphpl)	1900	1900	1900	1900	1900	1900	1900	1900	NA	1900	1900	NA
Speed (mph)		45			45			45			45	

* Left Turn Code : 1 - Exclusive left 2 - Left shared with through (IF 2 WBL should not be counted as a lane i.e. all LT lanes should be tallied under through)

Quee Links 800
Freeflow Links 1000

CALCULATION OF RECEPTOR'S COORDINATES

	COORDINATES			
RECEPTOR	X	Y	X	Y
#1			-48	-48
#2			48	-42
#3			48	54
#4			-48	36
#5			-48	-128
#6			48	-122
#7			128	-42
#8			128	54
#9			48	134
#10			-48	116
#11			-128	36
#12			-128	-48
#13			-48	-248
#14			48	-242
#15			248	-42
#16			248	54
#17			48	254
#18			-48	236
#19			-248	36
#20			-248	-48

Number of Links 22

CALCULATION OF LINK COORDINATES (w/ widths and lanes)

LINK	X1	Y1	X2	Y2	Width	Lanes
EB Approach	-1000	-14	0	-14	44	2
EB Departure	0	-20	1000	-20	32	1
EB Left	-1000	-2	0	-2	32	1
WB Approach	1000	20	0	20	44	2
WB Departure	0	14	-1000	14	32	1
WB Left	1000	2	0	2	44	2
NB Approach	20	-1000	20	0	44	2
NB Departure	20	0	20	1000	44	2
NB Left	2	-1000	2	0	32	1
SB Approach	-20	1000	-20	0	44	2
SB Departure	-20	0	-20	-1000	44	2
SB Left	-2	1000	-2	0	32	1
EB Left Queue	-38	-2	-838	-2	12	1
EB Through Queue	-38	-14	-838	-14	12	1
EB Right Queue	-38	-26	-838	-26	12	1
WB Left Queue	38	2	838	2	24	2
WB Through Queu	38	20	838	20	12	1
WB Right Queue	38	32	838	32	12	1
NB Left Queue	2	-32	2	-832	12	1
NB Through Queue	20	-32	20	-832	24	2
NB Right Queue	shared	shared	shared	shared	0	0
SB Left Queue	-2	26	-2	826	12	1
SB Through Queue	-20	26	-20	826	24	2
SB Right Queue	shared	shared	shared	shared	0	0

CAL3QHC (93157)
IBM-PC VERSION (2.01)
RUN NAME: 14.DAT

RUN BEGIN ON 12/17/11 AT 21:12

CAL3QHC: LINE SOURCE DISPERSION MODEL - VERSION 2.0, JANUARY 1992

JOB: Sunport I-25 Improvement Project RUN: 1-4 AM Build Sunport NB-I25

SITE & METEOROLOGICAL VARIABLES

VS = 0.0 CM/S VD = 0.0 CM/S Z0 = 175. CM
U = 1.0 M/S CLAS = 4 (D) ATIM = 60. MINUTES MIXH = 1000. M AMB = 3.0 PPM

LINK VARIABLES

LINK DESCRIPTION	LINK COORDINATES (FT) X1	Y1	X2	Y2	LENGTH (FT)	BRG TYPE (DEG)	VPH	EF (G/MI)	H (FT)	W (FT)	V/C	QUEUE (VEH)
1. EB A	-1000.0	-26.0	0.0	-26.0	1000.	90. AG	2064.	14.1	0.0	44.0		
2. EB D	0.0	-14.0	1000.0	-14.0	1000.	90. AG	2985.	14.1	0.0	44.0		
3. EB L	-1000.0	-2.0	0.0	-2.0	1000.	90. AG	447.	14.1	0.0	44.0		
4. WB A	1000.0	20.0	0.0	20.0	1000.	270. AG	559.	14.1	0.0	68.0		
5. WB D	0.0	32.0	-1000.0	32.0	1000.	270. AG	246.	14.1	0.0	56.0		
6. NB A	12.0	-1000.0	12.0	0.0	1000.	360. AG	1016.	14.1	0.0	44.0		
7. NB D	6.0	0.0	6.0	1000.0	1000.	360. AG	855.	14.1	0.0	32.0		
8. EB L Q	-6.0	-2.0	-269.8	-2.0	264.	270. AG	479.	100.0	0.0	24.0	1.04	13.4
9. EB TR Q	-6.0	-26.0	-124.5	-26.0	119.	270. AG	111.	100.0	0.0	24.0	0.73	6.0
10. WB T Q	18.0	20.0	28.1	20.0	10.	90. AG	277.	100.0	0.0	36.0	0.05	0.5
11. WB R Q	18.0	44.0	94.4	44.0	76.	90. AG	92.	100.0	0.0	12.0	0.34	3.9
12. NB T Q	12.0	-32.0	12.0	-78.8	47.	180. AG	237.	100.0	0.0	12.0	0.41	2.4
13. NB R Q	24.0	-32.0	24.0	-7646.9	7615.	180. AG	237.	100.0	0.0	12.0	3.99	386.8

1

JOB: Sunport I-25 Improvement Project RUN: 1-4 AM Build Sunport NB-I25

ADDITIONAL QUEUE LINK PARAMETERS

LINK DESCRIPTION	CYCLE LENGTH (SEC)	RED TIME (SEC)	CLEARANCE LOST TIME (SEC)	APPROACH VOL (VPH)	SATURATION FLOW RATE (VPH)	IDLE EM FAC (gm/hr)	SIGNAL TYPE	ARRIVAL RATE
8. EB L Q	110	91	4.5	447	1900	108.00	3	3
9. EB TR Q	110	21	5.5	2064	1900	108.00	3	3
10. WB T Q	110	35	5.5	160	1900	108.00	3	3
11. WB R Q	110	35	5.5	399	1900	108.00	3	3
12. NB T Q	110	90	4.5	95	1900	108.00	3	3
13. NB R Q	110	90	4.5	930	1900	108.00	3	3

RECEPTOR LOCATIONS

RECEPTOR	COORDINATES (FT) X	Y	Z
1. 1	-16.0	-54.0	5.0
2. 2	46.0	-42.0	5.0
3. 3	28.0	66.0	5.0
4. 4	-16.0	66.0	5.0
5. 5	-16.0	-134.0	5.0
6. 6	46.0	-122.0	5.0
7. 7	126.0	-42.0	5.0
8. 8	108.0	66.0	5.0
9. 9	28.0	146.0	5.0
10. 10	-16.0	146.0	5.0
11. 11	-96.0	66.0	5.0
12. 12	-96.0	-54.0	5.0
13. 13	-16.0	-254.0	5.0
14. 14	46.0	-242.0	5.0
15. 15	246.0	-42.0	5.0
16. 16	228.0	66.0	5.0
17. 17	28.0	266.0	5.0
18. 18	-16.0	266.0	5.0
19. 19	-216.0	66.0	5.0
20. 20	-216.0	-54.0	5.0

1

JOB: Sunport I-25 Improvement Project RUN: 1-4 AM Build Sunport NB-I25

MODEL RESULTS

REMARKS : In search of the angle corresponding to the maximum concentration, only the first angle, of the angles with same maximum concentrations, is indicated as maximum.

WIND ANGLE RANGE: 0.-360.

WIND ANGLE (DEGR)	CONCENTRATION (PPM) REC1	REC2	REC3	REC4	REC5	REC6	REC7	REC8	REC9	REC10	REC11	REC12	REC13	REC14	REC15	REC16	REC17	REC18	REC19	REC20
0.	5.4	4.9	3.5	3.5	4.6	4.2	4.6	3.1	3.5	3.5	3.1	5.3	4.1	4.2	4.5	3.0	3.5	3.5	3.0	4.9
5.	5.6	4.8	3.4	3.6	4.5	4.1	4.5	3.0	3.4	3.6	3.1	5.3	4.3	4.0	4.5	3.0	3.4	3.6	3.0	4.9
10.	5.5	4.7	3.2	3.6	4.7	4.0	4.5	3.0	3.2	3.6	3.2	5.4	4.5	3.8	4.5	3.0	3.2	3.6	3.1	5.0
15.	5.6	4.7	3.1	3.6	4.8	3.8	4.5	3.0	3.1	3.6	3.2	5.4	4.4	3.6	4.5	3.0	3.1	3.6	3.1	5.0
20.	5.3	4.6	3.1	3.6	4.7	3.6	4.5	3.0	3.1	3.6	3.2	5.4	4.5	3.4	4.5	3.0	3.1	3.6	3.1	5.0
25.	5.3	4.6	3.0	3.6	4.8	3.7	4.5	3.0	3.0	3.6	3.2	5.4	4.4	3.4	4.5	3.0	3.0	3.6	3.1	5.0
30.	5.4	4.5	3.0	3.5	4.6	3.7	4.5	3.0	3.0	3.5	3.2	5.4	4.5	3.4	4.5	3.0	3.0	3.5	3.1	5.1
35.	5.3	4.6	3.0	3.5	4.6	3.7	4.6	3.0	3.0	3.5	3.2	5.5	4.4	3.4	4.6	3.0	3.0	3.5	3.1	5.2
40.	5.2	4.6	3.0	3.5	4.7	3.7	4.6	3.0	3.0	3.5	3.2	5.5	4.3	3.5	4.6	3.0	3.0	3.5	3.1	5.2
45.	5.3	4.7	3.0	3.5	4.7	3.7	4.7	3.0	3.0	3.5	3.2	5.5	4.4	3.5	4.7	3.0	3.0	3.5	3.1	5.3
50.	5.3	4.8	3.0	3.4	4.6	3.7	4.8	3.0	3.0	3.4	3.2	5.5	4.4	3.5	4.8	3.0	3.0	3.4	3.1	5.4
55.	5.4	4.9	3.0	3.4	4.6	3.8	4.9	3.0	3.0	3.4	3.2	5.6	4.4	3.5	4.9	3.0	3.0	3.4	3.1	5.5
60.	5.6	5.0	3.0	3.4	4.6	3.8	5.0	3.0	3.0	3.4	3.2	5.6	4.4	3.5	5.0	3.0	3.0	3.4	3.1	5.7

65.	*	5.8	5.1	3.0	3.4	4.5	3.8	5.1	3.0	3.0	3.4	3.2	5.7	4.3	3.5	5.1	3.0	3.0	3.4	3.1	5.7
70.	*	5.9	5.2	3.0	3.4	4.5	3.8	5.2	3.0	3.0	3.4	3.1	5.7	4.2	3.4	5.2	3.0	3.0	3.4	3.1	5.7
75.	*	5.9	5.4	3.2	3.5	4.5	3.8	5.4	3.1	3.0	3.4	3.2	5.9	4.1	3.3	5.3	3.0	3.0	3.4	3.2	5.8
80.	*	5.9	5.3	3.2	3.6	4.4	3.7	5.3	3.2	3.0	3.4	3.5	5.6	4.0	3.2	5.3	3.2	3.0	3.4	3.4	5.6
85.	*	5.7	5.2	3.5	4.0	4.3	3.5	5.1	3.4	3.1	3.5	3.6	5.3	3.9	3.1	5.1	3.3	3.0	3.4	3.6	5.4
90.	*	5.5	4.7	3.7	4.2	4.2	3.3	4.7	3.6	3.1	3.7	3.9	4.9	4.0	3.1	4.7	3.6	3.0	3.4	3.8	4.9
95.	*	5.1	4.3	4.0	4.4	3.9	3.2	4.3	3.9	3.3	3.8	4.2	4.6	3.8	3.0	4.3	3.9	3.1	3.5	4.2	4.5
100.	*	4.7	3.9	4.2	4.6	3.9	3.1	3.8	4.1	3.4	3.9	4.3	4.1	3.8	3.0	3.8	4.0	3.1	3.5	4.4	3.9
105.	*	4.4	3.5	4.3	4.7	3.8	3.0	3.5	4.1	3.5	3.9	4.3	3.8	3.8	3.0	3.5	4.1	3.2	3.7	4.6	3.6
110.	*	4.3	3.3	4.4	4.8	3.8	3.0	3.3	4.2	3.6	4.0	4.3	3.7	3.8	3.0	3.3	4.2	3.4	3.8	4.7	3.4
115.	*	4.2	3.2	4.4	4.7	3.8	3.0	3.2	4.2	3.6	4.0	4.4	3.5	3.8	3.0	3.2	4.2	3.4	3.8	4.7	3.3
120.	*	4.3	3.1	4.3	4.6	3.9	3.0	3.1	4.1	3.6	4.0	4.6	3.4	3.9	3.0	3.1	4.1	3.4	3.8	4.8	3.3
125.	*	4.2	3.1	4.3	4.6	3.9	3.0	3.1	4.1	3.6	4.0	4.6	3.4	3.9	3.0	3.1	4.1	3.4	3.8	4.8	3.2
130.	*	4.2	3.1	4.2	4.6	3.9	3.0	3.1	4.0	3.6	4.0	4.8	3.4	3.9	3.0	3.1	4.0	3.4	3.8	4.8	3.2
135.	*	4.1	3.1	4.2	4.6	3.9	3.0	3.1	4.0	3.6	4.1	4.9	3.4	3.9	3.0	3.1	4.0	3.4	3.9	4.8	3.2
140.	*	4.1	3.0	4.1	4.6	3.9	3.0	3.0	3.9	3.6	4.2	4.9	3.4	3.9	3.0	3.0	3.9	3.4	3.9	4.7	3.2
145.	*	4.2	3.0	4.1	4.5	4.1	3.0	3.0	3.9	3.5	4.1	5.0	3.4	4.1	3.0	3.0	3.9	3.4	3.9	4.6	3.3
150.	*	4.2	3.0	4.1	4.8	4.1	3.0	3.0	3.9	3.5	4.3	5.0	3.4	4.1	3.0	3.0	3.9	3.4	3.9	4.6	3.3
155.	*	4.1	3.0	4.3	5.0	4.1	3.0	3.0	3.9	3.6	4.3	4.9	3.5	4.1	3.0	3.0	3.9	3.4	3.9	4.6	3.3
160.	*	4.3	3.2	4.4	5.2	4.3	3.2	3.0	3.9	3.8	4.4	4.9	3.5	4.3	3.2	3.0	3.9	3.6	4.2	4.6	3.3
165.	*	4.3	3.3	4.7	5.3	4.3	3.3	3.0	3.9	4.0	4.6	4.9	3.5	4.3	3.3	3.0	3.9	3.7	4.2	4.6	3.3
170.	*	4.3	3.6	5.1	5.6	4.3	3.6	3.1	4.0	4.2	4.8	4.9	3.5	4.3	3.6	3.0	3.9	3.9	4.4	4.6	3.3
175.	*	4.3	3.9	5.3	5.5	4.3	3.9	3.3	4.2	4.5	4.7	4.9	3.4	4.2	3.9	3.1	4.0	4.1	4.4	4.5	3.2
180.	*	4.1	4.2	5.7	5.5	4.0	4.2	3.4	4.3	4.8	4.7	4.7	3.3	4.0	4.2	3.1	4.1	4.3	4.3	4.4	3.1
185.	*	3.8	4.4	5.8	5.3	3.8	4.4	3.4	4.5	4.8	4.5	4.7	3.3	3.8	4.4	3.2	4.2	4.4	4.1	4.4	3.1
190.	*	3.5	4.5	5.7	4.9	3.5	4.5	3.5	4.5	4.7	4.4	4.5	3.1	3.5	4.5	3.3	4.2	4.2	3.9	4.3	3.0
195.	*	3.3	4.5	5.4	4.5	3.3	4.5	3.5	4.6	4.6	4.2	4.4	3.0	3.3	4.4	3.3	4.2	4.3	3.8	4.3	3.0
200.	*	3.1	4.4	5.3	4.5	3.1	4.4	3.5	4.6	4.4	3.9	4.4	3.0	3.1	4.4	3.3	4.2	4.2	3.6	4.2	3.0
205.	*	3.1	4.4	5.2	4.4	3.1	4.3	3.5	4.7	4.5	3.9	4.3	3.0	3.1	4.3	3.3	4.2	4.0	3.5	4.2	3.0

1

JOB: Sunport I-25 Improvement Project RUN: 1-4 AM Build Sunport NB-I25

WIND ANGLE (DEGR)	*	CONCENTRATION (PPM) REC1	REC2	REC3	REC4	REC5	REC6	REC7	REC8	REC9	REC10	REC11	REC12	REC13	REC14	REC15	REC16	REC17	REC18	REC19	REC20
210.	*	3.0	4.3	4.9	4.4	3.0	4.2	3.5	4.5	4.4	3.9	4.3	3.0	3.0	4.2	3.3	4.2	4.0	3.5	4.1	3.0
215.	*	3.0	4.4	5.0	4.4	3.0	4.2	3.5	4.5	4.4	3.8	4.3	3.0	3.0	4.2	3.3	4.2	4.0	3.4	4.0	3.0
220.	*	3.0	4.3	5.0	4.6	3.0	4.1	3.4	4.6	4.4	3.9	4.5	3.0	3.0	4.1	3.3	4.2	3.9	3.4	4.1	3.0
225.	*	3.0	4.5	5.0	4.6	3.0	4.1	3.5	4.7	4.4	3.9	4.5	3.0	3.0	4.1	3.3	4.1	3.9	3.3	4.0	3.0
230.	*	3.0	4.4	5.0	4.6	3.0	4.0	3.5	4.8	4.3	3.9	4.4	3.0	3.0	4.0	3.3	4.1	3.8	3.4	3.9	3.0
235.	*	3.0	4.4	5.1	4.6	3.0	4.0	3.5	4.9	4.3	3.8	4.4	3.0	3.0	4.0	3.3	4.4	3.8	3.4	3.8	3.0
240.	*	3.1	4.6	5.0	4.5	3.0	3.9	3.5	5.0	4.2	3.8	4.4	3.1	3.0	3.9	3.3	4.4	3.8	3.3	3.8	3.1
245.	*	3.1	4.6	5.0	4.4	3.0	3.9	3.7	5.1	4.1	3.7	4.3	3.1	3.0	3.9	3.3	4.5	3.6	3.2	3.7	3.1
250.	*	3.2	4.7	4.9	4.4	3.0	3.9	3.7	5.0	4.1	3.6	4.2	3.2	3.0	3.9	3.5	4.6	3.6	3.2	3.8	3.2
255.	*	3.3	5.1	4.8	4.3	3.0	3.9	4.1	4.9	4.0	3.6	4.1	3.3	3.0	3.9	3.7	4.5	3.5	3.1	3.8	3.3
260.	*	3.7	5.5	4.6	4.2	3.1	4.0	4.7	4.5	3.8	3.3	4.0	3.6	3.0	3.9	4.1	4.4	3.5	3.1	3.7	3.5
265.	*	4.2	6.0	4.3	4.0	3.1	4.1	5.1	4.3	3.6	3.1	3.8	4.0	3.0	3.9	4.6	4.3	3.4	3.0	3.5	3.9
270.	*	4.6	6.5	4.1	3.6	3.2	4.2	5.5	4.1	3.5	3.1	3.5	4.4	3.0	4.0	5.2	4.0	3.4	3.0	3.4	4.2
275.	*	5.1	7.1	3.9	3.5	3.4	4.5	5.9	3.7	3.4	3.0	3.3	4.7	3.1	4.0	5.5	3.5	3.4	3.0	3.2	4.4
280.	*	5.6	7.2	3.6	3.2	3.6	4.6	6.1	3.4	3.4	3.0	3.2	5.2	3.1	4.1	5.6	3.3	3.4	3.0	3.2	4.7
285.	*	5.8	7.2	3.4	3.0	3.7	4.7	6.1	3.1	3.4	3.0	3.0	5.4	3.2	4.1	5.5	3.1	3.4	3.0	3.0	4.8
290.	*	5.9	7.0	3.4	3.0	3.8	4.8	5.8	3.1	3.4	3.0	3.0	5.4	3.2	4.2	5.4	3.1	3.4	3.0	3.0	4.8
295.	*	5.8	6.6	3.4	3.0	3.9	5.0	5.5	3.2	3.4	3.0	3.0	5.5	3.4	4.4	5.3	3.1	3.4	3.0	3.0	4.7
300.	*	5.8	6.2	3.4	3.0	3.9	5.1	5.2	3.2	3.4	3.0	3.0	5.5	3.4	4.4	5.1	3.1	3.4	3.0	3.0	4.7
305.	*	5.7	6.1	3.4	3.0	4.0	5.3	5.0	3.2	3.4	3.0	3.0	5.5	3.5	4.6	5.0	3.1	3.4	3.0	3.0	4.8
310.	*	5.7	5.6	3.4	3.0	4.0	5.3	5.0	3.2	3.4	3.0	3.0	5.5	3.5	4.6	4.9	3.1	3.4	3.0	3.0	4.8
315.	*	5.5	5.5	3.5	3.0	4.1	5.3	4.9	3.2	3.5	3.0	3.0	5.4	3.6	4.8	4.8	3.1	3.5	3.0	3.0	4.8
320.	*	5.4	5.4	3.5	3.0	4.1	5.4	4.9	3.2	3.5	3.0	3.0	5.3	3.4	4.8	4.7	3.1	3.5	3.0	3.0	4.8
325.	*	5.4	5.2	3.5	3.0	4.1	5.3	4.9	3.2	3.5	3.0	3.0	5.3	3.5	4.7	4.7	3.1	3.5	3.0	3.0	4.9
330.	*	5.3	5.0	3.5	3.0	4.1	5.4	4.8	3.2	3.5	3.0	3.0	5.2	3.5	4.8	4.6	3.1	3.5	3.0	3.0	4.8
335.	*	5.2	4.9	3.6	3.0	4.1	5.2	4.8	3.2	3.6	3.0	3.0	5.2	3.5	4.9	4.6	3.1	3.6	3.0	3.0	4.9
340.	*	5.3	4.9	3.6	3.1	4.1	4.9	4.6	3.2	3.6	3.1	3.0	5.2	3.6	4.8	4.6	3.1	3.6	3.1	3.0	4.9
345.	*	5.3	5.1	3.6	3.1	4.2	4.9	4.6	3.2	3.6	3.1	3.0	5.2	3.8	4.7	4.6	3.1	3.6	3.1	3.0	4.9
350.	*	5.5	5.2	3.6	3.2	4.2	4.7	4.6	3.2	3.6	3.2	3.0	5.2	3.8	4.6	4.6	3.1	3.6	3.2	3.0	4.9
355.	*	5.5	5.0	3.6	3.4	4.4	4.4	4.6	3.1	3.6	3.4	3.0	5.3	4.0	4.5	4.5	3.0	3.6	3.4	3.0	4.9
360.	*	5.4	4.9	3.5	3.5	4.6	4.2	4.6	3.1	3.5	3.5	3.1	5.3	4.1	4.2	4.5	3.0	3.5	3.5	3.0	4.9
MAX	*	5.9	7.2	5.8	5.6	4.8	5.4	6.1	5.1	4.8	4.8	5.0	5.9	4.5	4.9	5.6	4.6	4.4	4.4	4.8	5.8
DEGR.	*	70	280	185	170	15	320	280	245	180	170	145	75	10	335	280	250	185	170	120	75

THE HIGHEST CONCENTRATION IS 7.20 PPM AT 280 DEGREES FROM REC2 .

1

JOB: Sunport I-25 Improvement Project RUN: 1-4 AM Build Sunport NB-I25

RECEPTOR - LINK MATRIX FOR THE ANGLE PRODUCING
THE MAXIMUM CONCENTRATION FOR EACH RECEPTOR

LINK #	*	CO/LINK (PPM) ANGLE (DEGREES) REC1 70	REC2 280	REC3 185	REC4 170	REC5 15	REC6 320	REC7 280	REC8 245	REC9 180	REC10 170	REC11 145	REC12 75	REC13 10	REC14 335	REC15 280	REC16 250	REC17 185	REC18 170	REC19 120	REC20 75
1	*	0.1	1.1	0.1	0.2	0.1	0.4	0.6	0.5	0.1	0.1	0.4	0.9	0.1	0.2	0.3	0.3	0.1	0.1	0.4	1.2
2	*	1.5	0.6	0.6	0.3	0.4	0.1	1.3	0.2	0.3	0.3	0.1	1.0	0.2	0.1	1.7	0.5	0.2	0.2	0.2	0.5
3	*	0.0	0.2	0.0	0.1	0.0	0.1	0.1	0.1	0.0	0.0	0.1	0.0	0.0	0.0	0.1	0.1	0.0	0.0	0.1	0.1
4	*	0.2	0.0	0.2	0.1	0.1	0.0	0.0	0.2	0.1	0.1	0.0	0.2	0.0	0.0	0.1	0.3	0.0	0.0	0.0	0.1
5	*	0.0	0.1	0.0	0.1	0.0	0.0	0.1	0.0	0.0	0.0	0.1	0.0	0.0	0.0	0.0	0.0	0.0	0.0	0.1	0.0
6	*	0.4	0.4	0.5	0.5	0.5	0.5	0.1	0.1	0.3	0.3	0.2	0.2	0.6	0.5	0.1	0.1	0.2	0.2	0.1	0.1
7	*	0.0	0.0	0.2	0.3	0.2	0.0	0.0	0.1	0.3	0.4	0.0	0.0	0.1	0.0	0.0	0.0	0.5	0.5	0.0	0.0
8	*	0.0	0.9	0.1	0.3	0.1	0.4	0.6	0.5	0.1	0.1	0.7	0.2	0.1	0.3	0.3	0.3	0.1	0.1	0.7	0.7
9	*	0.0	0.2	0.0	0.1	0.0	0.1	0.1	0.1	0.0	0.0	0.1	0.2	0.0	0.1	0.0	0.0	0.0	0.0	0.1	0.1
10	*	0.0	0.0	0.2	0.0	0.0	0.0	0.0	0.1	0.0	0.0	0.0	0.0	0.0	0.0	0.0	0.0	0.0	0.0	0.0	0.0
11	*	0.0	0.0	0.2	0.0	0.0	0.0	0.0	0.2	0.1	0.0	0.0	0.0	0.0	0.0	0.0	0.0	0.0	0.0	0.0	0.0
12	*	0.4	0.3	0.1	0.1	0.2	0.2	0.1	0.0	0.1	0.1	0.1	0.1	0.1	0.0	0.0	0.0	0.0	0.0	0.0	0.0
13	*	0.3	0.4	0.6	0.5	0.2	0.6	0.1	0.0	0.4	0.4	0.2	0.1	0.3	0.7	0.0	0.0	0.3	0.3	0.1	0.0

RUN ENDED ON 12/17/11 AT 21:12

1 CAL3QHC (93157)
IBM-PC VERSION (2.01)

RUN NAME: 16.DAT _____

RUN BEGIN ON 12/17/11 AT 21:13

CAL3QHC: LINE SOURCE DISPERSION MODEL - VERSION 2.0, JANUARY 1992

JOB: Sunport I-25 Improvement Project RUN: 1-6 PM Build Sunport NB-I25

SITE & METEOROLOGICAL VARIABLES

VS = 0.0 CM/S VD = 0.0 CM/S Z0 = 175. CM
U = 1.0 M/S CLAS = 4 (D) ATIM = 60. MINUTES MIXH = 1000. M AMB = 3.0 PPM

LINK VARIABLES

LINK DESCRIPTION	LINK COORDINATES (FT) X1	Y1	X2	Y2	LENGTH (FT)	BRG (DEG)	TYPE	VPH	EF (G/MI)	H (FT)	W (FT)	V/C	QUEUE (VEH)
1. EB A	-1000.0	-26.0	0.0	-26.0	1000.	90.	AG	1291.	14.1	0.0	44.0		
2. EB D	0.0	-14.0	1000.0	-14.0	1000.	90.	AG	1538.	14.1	0.0	44.0		
3. EB L	-1000.0	-2.0	0.0	-2.0	1000.	90.	AG	477.	14.1	0.0	44.0		
4. WB A	1000.0	20.0	0.0	20.0	1000.	270.	AG	2789.	14.1	0.0	68.0		
5. WB D	0.0	32.0	-1000.0	32.0	1000.	270.	AG	1511.	14.1	0.0	56.0		
6. NB A	12.0	-1000.0	12.0	0.0	1000.	360.	AG	326.	14.1	0.0	44.0		
7. NB D	6.0	0.0	6.0	1000.0	1000.	360.	AG	1814.	14.1	0.0	32.0		
8. EB L Q	-6.0	-2.0	-558.5	-2.0	553.	270.	AG	476.	100.0	0.0	24.0	1.19	28.1
9. EB TR Q	-6.0	-26.0	-80.1	-26.0	74.	270.	AG	135.	100.0	0.0	24.0	0.50	3.8
10. WB T Q	18.0	20.0	114.9	20.0	97.	90.	AG	357.	100.0	0.0	36.0	0.50	4.9
11. WB R Q	18.0	44.0	4352.6	44.8	4335.	90.	AG	119.	100.0	0.0	12.0	1.41	220.2
12. NB T Q	12.0	-32.0	12.0	-61.8	30.	180.	AG	222.	100.0	0.0	12.0	0.26	1.5
13. NB R Q	24.0	-32.0	24.0	-139.7	108.	180.	AG	222.	100.0	0.0	12.0	0.81	5.5

1

JOB: Sunport I-25 Improvement Project RUN: 1-6 PM Build Sunport NB-I25

ADDITIONAL QUEUE LINK PARAMETERS

LINK DESCRIPTION	CYCLE LENGTH (SEC)	RED TIME (SEC)	CLEARANCE LOST TIME (SEC)	APPROACH VOL (VPH)	SATURATION FLOW RATE (VPH)	IDLE EM FAC (gm/hr)	SIGNAL TYPE	ARRIVAL RATE
8. EB L Q	90	74	4.5	477	1900	108.00	3	3
9. EB TR Q	90	21	5.5	1291	1900	108.00	3	3
10. WB T Q	90	37	5.5	1438	1900	108.00	3	3
11. WB R Q	90	37	5.5	1351	1900	108.00	3	3
12. NB T Q	90	69	4.5	79	1900	108.00	3	3
13. NB R Q	90	69	4.5	247	1900	108.00	3	3

RECEPTOR LOCATIONS

RECEPTOR	COORDINATES (FT) X	Y	Z
1. 1	-16.0	-54.0	5.0
2. 2	46.0	-42.0	5.0
3. 3	28.0	66.0	5.0
4. 4	-16.0	66.0	5.0
5. 5	-16.0	-134.0	5.0
6. 6	46.0	-122.0	5.0
7. 7	126.0	-42.0	5.0
8. 8	108.0	66.0	5.0
9. 9	28.0	146.0	5.0
10. 10	-16.0	146.0	5.0
11. 11	-96.0	66.0	5.0
12. 12	-96.0	-54.0	5.0
13. 13	-16.0	-254.0	5.0
14. 14	46.0	-242.0	5.0
15. 15	246.0	-42.0	5.0
16. 16	228.0	66.0	5.0
17. 17	28.0	266.0	5.0
18. 18	-16.0	266.0	5.0
19. 19	-216.0	66.0	5.0
20. 20	-216.0	-54.0	5.0

1

JOB: Sunport I-25 Improvement Project RUN: 1-6 PM Build Sunport NB-I25

MODEL RESULTS

REMARKS : In search of the angle corresponding to the maximum concentration, only the first angle, of the angles with same maximum concentrations, is indicated as maximum.

WIND ANGLE RANGE: 0.-360.

WIND ANGLE (DEGR)	CONCENTRATION (PPM) REC1	REC2	REC3	REC4	REC5	REC6	REC7	REC8	REC9	REC10	REC11	REC12	REC13	REC14	REC15	REC16	REC17	REC18	REC19	REC20
0.	6.0	5.9	4.0	4.0	4.9	4.8	5.0	3.2	4.0	4.0	3.2	5.1	4.2	4.1	4.7	3.0	4.0	4.0	3.0	4.9
5.	6.1	5.7	3.8	4.2	4.7	4.6	4.9	3.1	3.8	4.2	3.3	5.2	4.3	4.0	4.7	3.0	3.7	4.2	3.1	5.0
10.	5.9	5.5	3.5	4.3	4.9	4.5	4.8	3.0	3.5	4.3	3.3	5.3	4.1	3.9	4.7	3.0	3.5	4.3	3.1	5.0
15.	5.9	5.3	3.3	4.4	4.9	4.3	4.6	3.0	3.3	4.4	3.4	5.3	4.0	3.8	4.6	3.0	3.3	4.3	3.2	5.0
20.	5.8	5.3	3.2	4.3	4.8	4.1	4.6	3.0	3.2	4.3	3.4	5.3	3.9	3.7	4.6	3.0	3.2	4.3	3.2	5.0
25.	5.7	5.3	3.1	4.2	4.8	4.1	4.7	3.0	3.1	4.2	3.4	5.3	4.1	3.7	4.7	3.0	3.1	4.2	3.2	5.1
30.	5.6	5.3	3.0	4.1	4.8	4.0	4.7	3.0	3.0	4.1	3.4	5.6	4.0	3.6	4.7	3.0	3.0	4.1	3.2	5.3
35.	5.5	5.3	3.0	4.1	4.7	4.0	4.7	3.0	3.0	4.1	3.4	5.6	4.0	3.6	4.7	3.0	3.0	4.1	3.2	5.3
40.	5.5	5.2	3.0	4.0	4.7	4.0	4.7	3.0	3.0	4.0	3.4	5.6	3.8	3.6	4.7	3.0	3.0	4.0	3.2	5.3
45.	5.6	5.3	3.0	4.0	4.6	3.9	4.9	3.0	3.0	4.0	3.4	5.8	3.8	3.6	4.9	3.0	3.0	4.0	3.2	5.4

50. *	5.7	5.2	3.0	3.9	4.6	4.0	4.9	3.0	3.0	3.9	3.3	6.1	3.8	3.7	4.9	3.0	3.0	3.9	3.2	5.5
55. *	5.7	5.4	3.0	3.9	4.6	4.0	5.1	3.0	3.0	3.9	3.3	5.9	3.8	3.7	5.1	3.0	3.0	3.9	3.2	5.5
60. *	5.8	5.4	3.0	3.8	4.4	4.1	5.2	3.0	3.0	3.8	3.3	6.0	3.7	3.6	5.2	3.0	3.0	3.8	3.2	5.7
65. *	5.8	5.4	3.1	3.8	4.5	4.1	5.3	3.1	3.0	3.8	3.3	6.0	3.7	3.6	5.3	3.1	3.0	3.8	3.3	6.0
70. *	6.0	5.5	3.1	3.9	4.3	4.1	5.4	3.1	3.0	3.8	3.5	6.1	3.7	3.6	5.3	3.1	3.0	3.8	3.4	5.9
75. *	6.0	5.5	3.4	4.1	4.3	3.9	5.5	3.3	3.0	3.8	3.7	6.0	3.5	3.4	5.4	3.3	3.0	3.8	3.5	6.0
80. *	5.9	5.4	3.8	4.6	4.2	3.8	5.4	3.8	3.1	3.9	4.1	5.9	3.4	3.3	5.3	3.7	3.0	3.8	3.9	5.7
85. *	5.5	5.1	4.1	5.1	4.0	3.6	5.1	4.1	3.2	4.0	4.6	5.4	3.4	3.3	5.0	4.1	3.0	3.8	4.2	5.4
90. *	4.9	4.6	4.7	5.6	3.7	3.4	4.6	4.6	3.4	4.2	5.1	5.0	3.1	3.0	4.5	4.6	3.1	4.0	4.9	4.9
95. *	4.6	4.2	5.2	6.0	3.5	3.2	4.1	5.0	3.7	4.5	5.5	4.5	3.1	3.0	4.1	5.0	3.2	4.0	5.2	4.1
100. *	4.1	3.7	5.5	6.5	3.3	3.0	3.6	5.3	3.9	4.7	5.7	3.9	3.1	3.0	3.6	5.3	3.4	4.2	5.4	3.8
105. *	3.8	3.3	5.6	6.6	3.2	3.0	3.3	5.4	4.0	4.8	5.8	3.6	3.1	3.0	3.3	5.4	3.4	4.3	5.5	3.4
110. *	3.7	3.2	5.8	6.7	3.2	3.0	3.2	5.3	4.1	4.9	5.6	3.5	3.1	3.0	3.1	5.3	3.5	4.3	5.5	3.2
115. *	3.6	3.1	5.8	6.5	3.2	3.0	3.1	5.3	4.0	4.8	5.4	3.2	3.1	3.0	3.1	5.3	3.7	4.5	5.5	3.1
120. *	3.6	3.0	5.8	6.4	3.1	3.0	3.0	5.2	4.0	4.9	5.4	3.2	3.1	3.0	3.0	5.2	3.7	4.5	5.2	3.0
125. *	3.7	3.0	5.6	6.4	3.2	3.0	3.0	5.0	4.0	5.0	5.3	3.2	3.2	3.0	3.0	5.0	3.7	4.6	5.4	3.0
130. *	3.6	3.0	5.6	6.2	3.2	3.0	3.0	4.9	4.1	5.1	5.2	3.2	3.2	3.0	3.0	4.9	3.7	4.6	5.1	3.0
135. *	3.6	3.0	5.7	6.1	3.2	3.0	3.0	4.9	4.0	5.1	5.2	3.1	3.2	3.0	3.0	4.9	3.7	4.7	4.9	3.0
140. *	3.5	3.0	5.6	5.9	3.2	3.0	3.0	4.8	4.1	5.1	5.1	3.1	3.2	3.0	3.0	4.8	3.6	4.6	4.8	3.0
145. *	3.5	3.0	5.6	5.7	3.2	3.0	3.0	4.9	4.0	5.1	5.1	3.1	3.2	3.0	3.0	4.8	3.6	4.8	4.8	3.0
150. *	3.5	3.0	5.6	5.8	3.2	3.0	3.0	4.9	4.1	5.2	4.9	3.1	3.2	3.0	3.0	4.8	3.7	4.8	4.7	3.0
155. *	3.4	3.0	5.5	5.6	3.2	3.0	3.0	4.8	4.2	5.3	5.0	3.1	3.2	3.0	3.0	4.7	3.8	4.8	4.7	3.0
160. *	3.4	3.0	5.6	5.7	3.2	3.0	3.0	4.9	4.2	5.3	4.9	3.1	3.2	3.0	3.0	4.7	3.8	4.8	4.7	3.0
165. *	3.3	3.0	5.7	5.7	3.2	3.0	3.0	5.0	4.3	5.2	4.9	3.1	3.2	3.0	3.0	4.7	3.8	4.7	4.7	3.0
170. *	3.3	3.2	5.7	5.6	3.2	3.1	3.0	5.1	4.6	4.9	4.9	3.1	3.2	3.1	3.0	4.7	4.1	4.9	4.7	3.0
175. *	3.2	3.2	5.9	5.5	3.2	3.1	3.0	5.2	4.7	4.9	4.9	3.0	3.2	3.1	3.0	4.7	4.2	4.9	4.7	3.0
180. *	3.2	3.3	5.9	5.2	3.2	3.1	3.0	5.3	5.0	4.9	4.8	3.0	3.2	3.1	3.0	4.8	4.6	4.6	4.8	3.0
185. *	3.1	3.5	6.2	5.1	3.1	3.2	3.0	5.4	5.1	4.5	4.7	3.0	3.1	3.2	3.0	4.7	4.8	4.1	4.7	3.0
190. *	3.1	3.5	6.1	4.8	3.1	3.2	3.1	5.6	5.0	4.5	4.7	3.0	3.1	3.2	3.0	4.7	4.8	3.9	4.7	3.0
195. *	3.1	3.6	6.1	4.8	3.1	3.2	3.1	5.6	5.2	4.3	4.7	3.0	3.1	3.2	3.0	4.7	4.7	3.8	4.7	3.0
200. *	3.0	3.7	6.2	4.8	3.0	3.2	3.1	5.7	5.3	4.2	4.7	3.0	3.0	3.2	3.0	4.7	4.6	3.7	4.7	3.0
205. *	3.0	3.7	6.0	4.8	3.0	3.2	3.1	5.7	5.1	4.1	4.7	3.0	3.0	3.2	3.0	4.7	4.8	3.7	4.7	3.0

1

JOB: Sunport I-25 Improvement Project RUN: 1-6 PM Build Sunport NB-I25

WIND ANGLE (DEGR) *	CONCENTRATION (PPM) REC1	REC2	REC3	REC4	REC5	REC6	REC7	REC8	REC9	REC10	REC11	REC12	REC13	REC14	REC15	REC16	REC17	REC18	REC19	REC20
210. *	3.0	3.8	5.8	4.8	3.0	3.3	3.1	5.6	5.2	4.0	4.7	3.0	3.0	3.2	3.0	4.8	4.7	3.6	4.7	3.0
215. *	3.0	3.8	5.9	4.9	3.0	3.3	3.1	5.7	5.0	4.0	4.8	3.0	3.0	3.2	3.0	4.8	4.7	3.7	4.8	3.0
220. *	3.0	3.9	5.9	5.0	3.0	3.4	3.2	6.0	5.0	4.1	4.9	3.0	3.0	3.2	3.0	4.8	4.7	3.7	4.9	3.0
225. *	3.0	3.8	5.9	4.9	3.0	3.3	3.2	6.0	5.1	4.1	4.9	3.0	3.0	3.1	3.0	5.1	4.7	3.7	4.9	3.0
230. *	3.0	3.7	6.0	5.0	3.0	3.4	3.2	6.1	5.0	4.1	5.0	3.0	3.0	3.1	3.0	5.1	4.6	3.7	5.0	3.0
235. *	3.0	3.8	6.0	5.0	3.0	3.4	3.3	6.3	5.0	4.1	5.0	3.0	3.0	3.1	3.0	5.4	4.6	3.7	5.0	3.0
240. *	3.0	3.8	5.9	5.3	3.0	3.5	3.3	6.4	5.0	4.2	5.3	3.0	3.0	3.1	3.0	5.4	4.4	3.6	5.2	3.0
245. *	3.1	3.9	6.1	5.3	3.0	3.5	3.3	6.4	5.0	4.1	5.3	3.1	3.0	3.1	3.2	5.8	4.4	3.6	5.2	3.1
250. *	3.1	4.2	6.2	5.4	3.0	3.5	3.6	6.5	4.9	4.1	5.3	3.1	3.0	3.1	3.2	6.0	4.2	3.4	5.2	3.1
255. *	3.3	4.5	6.1	5.3	3.0	3.6	3.8	6.1	4.7	3.9	5.3	3.3	3.0	3.1	3.5	6.0	4.1	3.3	5.1	3.2
260. *	3.7	5.0	5.9	5.1	3.0	3.6	4.4	5.9	4.5	3.7	5.0	3.6	3.0	3.1	4.0	5.9	4.0	3.1	4.9	3.5
265. *	4.0	5.5	5.5	4.7	3.1	3.8	5.0	5.3	4.2	3.4	4.7	4.0	3.0	3.1	4.6	5.5	3.9	3.1	4.6	3.9
270. *	4.5	6.3	5.2	4.5	3.3	4.0	5.3	5.0	4.2	3.3	4.4	4.5	3.0	3.1	5.1	5.1	3.8	3.0	4.2	4.4
275. *	5.2	6.5	4.7	4.0	3.6	4.2	5.6	4.5	3.9	3.1	4.0	5.0	3.1	3.2	5.5	4.4	3.8	3.0	3.9	4.8
280. *	5.5	6.7	4.2	3.5	3.8	4.5	6.0	3.8	3.8	3.0	3.5	5.4	3.2	3.4	5.8	4.0	3.8	3.0	3.5	5.2
285. *	5.7	6.7	4.0	3.2	4.0	4.8	6.0	3.6	3.8	3.0	3.2	5.5	3.3	3.4	5.8	3.5	3.8	3.0	3.2	5.4
290. *	5.9	6.6	3.9	3.1	4.1	4.8	5.8	3.4	3.8	3.0	3.1	5.5	3.3	3.7	5.8	3.3	3.8	3.0	3.1	5.5
295. *	5.8	6.3	3.8	3.1	4.2	4.9	5.8	3.3	3.8	3.0	3.1	5.5	3.7	3.8	5.6	3.2	3.8	3.0	3.1	5.4
300. *	5.7	6.0	3.8	3.1	4.2	5.0	5.6	3.3	3.8	3.0	3.1	5.4	3.7	3.9	5.6	3.2	3.8	3.0	3.1	5.4
305. *	5.6	5.9	3.9	3.0	4.2	5.0	5.8	3.3	3.9	3.0	3.0	5.3	3.8	3.9	5.4	3.2	3.9	3.0	3.0	5.3
310. *	5.6	5.5	3.9	3.0	4.2	4.9	5.9	3.3	3.9	3.0	3.0	5.3	3.8	3.9	5.2	3.2	3.9	3.0	3.0	5.3
315. *	5.5	5.5	4.0	3.0	4.1	5.1	5.8	3.4	4.0	3.0	3.0	5.2	3.8	3.9	5.2	3.2	4.0	3.0	3.0	5.2
320. *	5.5	5.5	4.0	3.0	4.1	5.0	5.6	3.4	4.0	3.0	3.0	5.1	3.8	4.0	4.9	3.2	4.0	3.0	3.0	5.1
325. *	5.5	5.3	4.1	3.0	4.2	5.1	5.6	3.4	4.1	3.0	3.0	5.1	3.8	4.0	4.9	3.2	4.1	3.0	3.0	5.1
330. *	5.5	5.5	4.1	3.0	4.1	5.1	5.7	3.4	4.1	3.0	3.0	5.1	3.7	3.9	4.9	3.2	4.1	3.0	3.0	5.1
335. *	5.5	5.4	4.2	3.1	4.1	5.1	5.6	3.4	4.2	3.1	3.0	4.9	3.7	3.9	4.9	3.2	4.2	3.1	3.0	4.9
340. *	5.3	5.6	4.3	3.2	4.1	4.9	5.4	3.4	4.3	3.2	3.0	4.8	3.6	4.0	4.8	3.2	4.3	3.2	3.0	4.8
345. *	5.3	5.9	4.4	3.3	4.2	5.0	5.2	3.4	4.4	3.3	3.0	4.8	3.6	4.3	4.7	3.2	4.3	3.3	3.0	4.8
350. *	5.5	5.9	4.3	3.5	4.4	5.0	5.2	3.3	4.3	3.5	3.0	5.0	3.8	4.3	4.7	3.1	4.3	3.5	3.0	4.9
355. *	5.7	6.0	4.2	3.8	4.6	4.8	5.1	3.3	4.2	3.8	3.1	5.0	4.0	4.2	4.8	3.1	4.2	3.7	3.0	4.9
360. *	6.0	5.9	4.0	4.0	4.9	4.8	5.0	3.2	4.0	4.0	3.2	5.1	4.2	4.1	4.7	3.0	4.0	4.0	3.0	4.9
MAX *	6.1	6.7	6.2	6.7	4.9	5.1	6.0	6.5	5.3	5.3	5.8	6.1	4.3	4.3	5.8	6.0	4.8	4.9	5.5	6.0
DEGR. *	5	280	185	110	0	315	280	250	200	160	105	50	5	345	280	250	185	170	105	65

THE HIGHEST CONCENTRATION IS 6.70 PPM AT 280 DEGREES FROM REC2 .

1

JOB: Sunport I-25 Improvement Project RUN: 1-6 PM Build Sunport NB-I25

RECEPTOR - LINK MATRIX FOR THE ANGLE PRODUCING
THE MAXIMUM CONCENTRATION FOR EACH RECEPTOR

LINK # *	CO/LINK (PPM) ANGLE (DEGREES) REC1 5	REC2 280	REC3 185	REC4 110	REC5 0	REC6 315	REC7 280	REC8 250	REC9 200	REC10 160	REC11 105	REC12 50	REC13 5	REC14 345	REC15 280	REC16 250	REC17 185	REC18 170	REC19 105	REC20 65
1 *	0.5	0.7	0.1	0.0	0.2	0.3	0.4	0.3	0.1	0.0	0.0	0.7	0.1	0.1	0.2	0.2	0.1	0.0	0.1	0.8
2 *	0.1	0.3	0.3	0.5	0.1	0.0	0.7	0.1	0.1	0.2	0.4	0.1	0.1	0.1	0.9	0.3	0.1	0.1	0.3	0.1
3 *	0.1	0.2	0.0	0.0	0.1	0.1	0.1	0.1	0.1	0.0	0.0	0.1	0.0	0.0	0.1	0.1	0.0	0.0	0.1	0.2
4 *	0.3	0.0	1.0	1.4	0.2	0.0	0.2	0.8	0.2	0.4	1.0	0.4	0.2	0.1	0.6	1.3	0.2	0.2	0.5	0.3
5 *	0.2	0.5	0.0	0.1	0.1	0.3	0.4	0.4	0.2	0.1	0.5	0.2	0.1	0.1	0.3	0.1	0.1	0.1	0.8	0.3
6 *	0.1	0.1	0.2	0.0	0.1	0.1	0.0	0.0	0.0	0.0	0.0	0.0	0.2	0.2	0.0	0.0	0.1	0.1	0.0	0.0
7 *	0.9	0.0	0.5	0.8	0.5	0.0	0.1	0.3	1.1	1.1	0.3	0.3	0.3	0.2	0.1	0.1	1.0	1.1	0.1	0.2
8 *	0.5	1.1	0.1	0.0	0.3	0.5	0.7	0.7	0.3	0.1	0.1	0.7	0.1	0.2	0.4	0.3	0.1	0.1	0.4	0.9
9 *	0.3	0.2	0.0	0.0	0.1	0.1	0.1	0.1	0.1	0.0	0.0	0.3	0.0	0.0	0.0	0.0	0.0	0.0	0.0	0.0
10 *	0.1	0.0	0.5	0.6	0.1	0.0	0.1	0.4	0.1	0.2	0.3	0.2	0.1	0.1	0.2	0.3	0.1	0.1	0.1	0.1
11 *	0.0	0.0	0.2	0.3	0.0	0.0	0.0	0.3	0.0	0.1	0.2	0.1	0.0	0.0	0.0	0.3	0.0	0.0	0.1	0.1
12 *	0.0	0.2	0.1	0.0	0.1	0.1	0.1	0.0	0.0	0.0	0.0	0.0	0.0	0.0	0.0	0.0	0.0	0.0	0.0	0.0
13 *	0.0	0.4	0.2	0.0	0.0	0.6	0.1	0.0	0.0	0.1	0.0	0.0	0.1	0.2	0.0	0.0	0.0	0.1	0.0	0.0

RUN ENDED ON 12/17/11 AT 21:13

1 CAL3QHC (93157)
IBM-PC VERSION (2.01)

RUN NAME: 24.DAT

RUN BEGIN ON 12/17/11 AT 21:13

CAL3QHC: LINE SOURCE DISPERSION MODEL - VERSION 2.0, JANUARY 1992

JOB: Sunport I-25 Improvement Proj RUN: 2-4 AM Build Sunport SB-I25

SITE & METEOROLOGICAL VARIABLES

VS = 0.0 CM/S VD = 0.0 CM/S Z0 = 175. CM
U = 1.0 M/S CLAS = 4 (D) ATIM = 60. MINUTES MIXH = 1000. M AMB = 3.0 PPM

LINK VARIABLES

LINK DESCRIPTION	LINK COORDINATES (FT) X1	Y1	X2	Y2	LENGTH (FT)	BRG (DEG)	TYPE	VPH	EF (G/MI)	H (FT)	W (FT)	V/C	QUEUE (VEH)
1. EB A	-1000.0	-20.0	0.0	-20.0	1000.	90.	AG	1044.	14.1	0.0	68.0		
2. EB D	0.0	-32.0	1000.0	-32.0	1000.	90.	AG	2511.	14.1	0.0	56.0		
3. WB A	1000.0	26.0	0.0	26.0	1000.	270.	AG	165.	14.1	0.0	44.0		
4. WB D	0.0	14.0	-1000.0	14.0	1000.	270.	AG	418.	14.1	0.0	44.0		
5. WB L	0.0	2.0	-1000.0	2.0	1000.	270.	AG	81.	14.1	0.0	44.0		
6. SB A	-18.0	1000.0	-18.0	0.0	1000.	180.	AG	261.	14.1	0.0	44.0		
7. SB D	-6.0	0.0	-6.0	-1000.0	1000.	180.	AG	151.	14.1	0.0	32.0		
8. SB L	0.0	1000.0	0.0	0.0	1000.	180.	AG	1529.	14.1	0.0	44.0		
9. EB T Q	-18.0	-20.0	-164.5	-20.0	147.	270.	AG	616.	100.0	0.0	36.0	0.77	7.4
10. EB R Q	-18.0	-44.0	-44.4	-44.0	26.	270.	AG	205.	100.0	0.0	12.0	0.15	1.3
11. WB L Q	18.0	2.0	39.0	2.0	21.	90.	AG	506.	100.0	0.0	24.0	0.31	1.1
12. WB T Q	18.0	26.0	46.2	26.0	28.	90.	AG	332.	100.0	0.0	24.0	0.12	1.4
13. SB L Q	0.0	32.0	0.0	228.3	196.	360.	AG	248.	100.0	0.0	24.0	0.78	10.0
14. SB T Q	-18.0	32.0	-18.0	34.1	2.	360.	AG	124.	100.0	0.0	12.0	0.01	0.1
15. SB R Q	-30.0	32.0	-30.0	97.0	65.	360.	AG	124.	100.0	0.0	12.0	0.26	3.3

1

JOB: Sunport I-25 Improvement Proj RUN: 2-4 AM Build Sunport SB-I25

ADDITIONAL QUEUE LINK PARAMETERS

LINK DESCRIPTION	CYCLE LENGTH (SEC)	RED TIME (SEC)	CLEARANCE LOST TIME (SEC)	APPROACH VOL (VPH)	SATURATION FLOW RATE (VPH)	IDLE EM FAC (gm/hr)	SIGNAL TYPE	ARRIVAL RATE
9. EB T Q	110	78	5.5	982	1900	108.00	3	3
10. EB R Q	110	78	5.5	62	1900	108.00	3	3
11. WB L Q	110	96	4.5	81	1900	108.00	3	3
12. WB T Q	110	63	5.5	165	1900	108.00	3	3
13. SB L Q	110	47	4.5	1529	1900	108.00	3	3
14. SB T Q	110	47	4.5	8	1900	108.00	3	3
15. SB R Q	110	47	4.5	253	1900	108.00	3	3

RECEPTOR LOCATIONS

RECEPTOR	COORDINATES (FT) X	Y	Z
1. 1	-28.0	-66.0	5.0
2. 2	16.0	-66.0	5.0
3. 3	28.0	54.0	5.0
4. 4	-52.0	42.0	5.0
5. 5	-28.0	-146.0	5.0
6. 6	16.0	-146.0	5.0
7. 7	96.0	-66.0	5.0
8. 8	108.0	54.0	5.0
9. 9	28.0	134.0	5.0
10. 10	-52.0	122.0	5.0
11. 11	-132.0	42.0	5.0
12. 12	-108.0	-66.0	5.0
13. 13	-28.0	-266.0	5.0
14. 14	16.0	-266.0	5.0
15. 15	216.0	-66.0	5.0
16. 16	228.0	54.0	5.0
17. 17	28.0	254.0	5.0
18. 18	-52.0	242.0	5.0
19. 19	-252.0	42.0	5.0
20. 20	-228.0	-66.0	5.0

1

JOB: Sunport I-25 Improvement Proj RUN: 2-4 AM Build Sunport SB-I25

MODEL RESULTS

REMARKS : In search of the angle corresponding to the maximum concentration, only the first angle, of the angles with same maximum concentrations, is indicated as maximum.

WIND ANGLE RANGE: 0.-360.

WIND ANGLE (DEGR)	CONCENTRATION (PPM) REC1	REC2	REC3	REC4	REC5	REC6	REC7	REC8	REC9	REC10	REC11	REC12	REC13	REC14	REC15	REC16	REC17	REC18	REC19	REC20
0.	6.0	5.5	4.2	3.6	4.5	4.4	4.3	3.1	4.1	3.5	3.1	5.1	3.9	3.8	4.1	3.0	3.9	3.5	3.0	3.5
5.	6.0	5.5	3.9	3.9	4.5	4.3	4.2	3.1	3.8	3.6	3.2	5.2	3.9	3.6	4.1	3.0	3.6	3.6	3.0	3.6
10.	5.9	5.1	3.5	4.1	4.6	4.0	4.1	3.0	3.5	3.9	3.2	5.3	3.7	3.5	4.0	3.0	3.4	3.7	3.1	3.6
15.	5.7	4.9	3.3	4.2	4.4	4.0	4.0	3.0	3.2	3.9	3.4	5.4	3.7	3.4	4.0	3.0	3.2	3.8	3.1	3.6
20.	5.4	4.7	3.1	4.4	4.1	3.7	4.0	3.0	3.1	4.0	3.4	5.6	3.4	3.4	4.0	3.0	3.1	3.8	3.1	3.7
25.	5.0	4.4	3.1	4.3	4.0	3.5	4.0	3.0	3.1	4.0	3.5	5.7	3.5	3.3	4.0	3.0	3.1	3.7	3.2	3.7
30.	4.8	4.4	3.0	4.4	3.7	3.5	4.1	3.0	3.0	4.0	3.5	5.6	3.4	3.3	4.1	3.0	3.0	3.7	3.2	3.9
35.	4.6	4.3	3.0	4.5	3.7	3.5	4.1	3.0	3.0	4.1	3.5	5.6	3.4	3.3	4.1	3.0	3.0	3.7	3.2	4.0
40.	4.5	4.2	3.0	4.4	3.6	3.5	4.2	3.0	3.0	4.0	3.6	5.5	3.4	3.3	4.2	3.0	3.0	3.6	3.2	4.1

45.	4.5	4.2	3.0	4.4	3.6	3.5	4.2	3.0	3.0	4.0	3.6	5.5	3.4	3.3	4.2	3.0	3.0	3.6	3.2	4.2
50.	4.3	4.3	3.0	4.4	3.7	3.6	4.3	3.0	3.0	4.0	3.6	5.4	3.4	3.3	4.3	3.0	3.0	3.6	3.3	4.5
55.	4.3	4.3	3.0	4.4	3.7	3.6	4.3	3.0	3.0	4.0	3.5	5.4	3.4	3.3	4.3	3.0	3.0	3.6	3.3	4.7
60.	4.3	4.4	3.0	4.3	3.7	3.6	4.4	3.0	3.0	4.0	3.6	5.2	3.4	3.3	4.4	3.0	3.0	3.6	3.3	4.8
65.	4.4	4.5	3.0	4.3	3.7	3.6	4.5	3.0	3.0	4.0	3.6	5.0	3.4	3.3	4.5	3.0	3.0	3.6	3.3	4.9
70.	4.5	4.6	3.0	4.3	3.7	3.6	4.6	3.0	3.0	4.0	3.5	4.9	3.4	3.3	4.6	3.0	3.0	3.6	3.3	5.0
75.	4.5	4.7	3.0	4.5	3.7	3.6	4.7	3.0	3.0	4.0	3.6	4.8	3.3	3.2	4.7	3.0	3.0	3.6	3.4	5.0
80.	4.6	4.7	3.1	4.7	3.6	3.5	4.7	3.1	3.0	4.0	3.8	4.6	3.3	3.2	4.7	3.1	3.0	3.6	3.5	4.8
85.	4.5	4.6	3.3	4.8	3.5	3.4	4.6	3.3	3.1	4.1	4.0	4.4	3.2	3.1	4.5	3.3	3.0	3.6	3.8	4.4
90.	4.3	4.3	3.5	5.2	3.4	3.2	4.3	3.5	3.1	4.2	4.3	4.1	3.2	3.0	4.2	3.4	3.0	3.7	4.1	4.1
95.	4.0	4.0	3.6	5.2	3.2	3.1	3.9	3.6	3.2	4.2	4.7	3.7	3.1	3.0	3.9	3.6	3.1	3.8	4.5	3.8
100.	3.7	3.6	3.8	5.3	3.2	3.1	3.6	3.7	3.3	4.3	4.7	3.4	3.1	3.0	3.6	3.7	3.1	3.9	4.5	3.5
105.	3.4	3.4	3.8	5.3	3.1	3.0	3.4	3.8	3.4	4.4	4.7	3.2	3.1	3.0	3.4	3.8	3.2	4.0	4.8	3.3
110.	3.3	3.2	3.8	5.2	3.1	3.0	3.2	3.8	3.4	4.5	4.6	3.1	3.1	3.0	3.2	3.8	3.2	4.1	4.7	3.1
115.	3.2	3.1	3.9	5.0	3.1	3.0	3.1	3.8	3.4	4.5	4.7	3.0	3.1	3.0	3.1	3.8	3.3	4.2	4.7	3.0
120.	3.1	3.1	3.9	5.0	3.1	3.0	3.1	3.8	3.4	4.6	4.8	3.0	3.1	3.0	3.1	3.8	3.3	4.3	4.4	3.0
125.	3.1	3.1	4.0	4.9	3.1	3.0	3.1	3.8	3.4	4.7	4.7	3.0	3.1	3.0	3.1	3.8	3.3	4.3	4.3	3.0
130.	3.1	3.1	4.0	4.6	3.1	3.0	3.1	3.8	3.4	4.7	4.7	3.0	3.1	3.0	3.1	3.8	3.3	4.3	4.0	3.0
135.	3.1	3.1	4.1	4.5	3.1	3.0	3.1	3.8	3.4	4.7	4.7	3.0	3.1	3.0	3.1	3.8	3.3	4.4	3.9	3.0
140.	3.1	3.0	4.1	4.5	3.1	3.0	3.0	3.7	3.4	4.8	4.7	3.0	3.1	3.0	3.0	3.7	3.3	4.4	3.7	3.0
145.	3.1	3.0	4.2	4.3	3.1	3.0	3.0	3.7	3.4	4.7	4.6	3.0	3.1	3.0	3.0	3.7	3.3	4.4	3.6	3.0
150.	3.1	3.0	4.3	4.5	3.1	3.0	3.0	3.7	3.4	4.6	4.6	3.0	3.1	3.0	3.0	3.7	3.3	4.4	3.6	3.0
155.	3.1	3.0	4.5	4.7	3.1	3.0	3.0	3.7	3.4	4.6	4.6	3.0	3.1	3.0	3.0	3.7	3.4	4.3	3.5	3.0
160.	3.1	3.0	4.7	4.6	3.1	3.0	3.0	3.7	3.7	4.5	4.6	3.0	3.1	3.0	3.0	3.7	3.3	4.3	3.5	3.0
165.	3.1	3.0	4.8	4.7	3.1	3.0	3.0	3.7	3.7	4.2	4.6	3.0	3.1	3.0	3.0	3.7	3.5	4.1	3.5	3.0
170.	3.1	3.0	4.9	4.7	3.1	3.0	3.0	3.7	3.8	4.2	4.6	3.0	3.1	3.0	3.0	3.7	3.7	4.1	3.5	3.0
175.	3.1	3.1	4.9	4.7	3.1	3.1	3.0	3.7	3.9	4.2	4.6	3.0	3.1	3.1	3.0	3.7	4.0	3.9	3.5	3.0
180.	3.1	3.1	5.1	4.7	3.1	3.1	3.0	3.7	4.2	4.0	4.6	3.0	3.1	3.1	3.0	3.7	4.3	3.9	3.5	3.0
185.	3.1	3.1	5.1	4.6	3.1	3.1	3.0	3.7	4.5	4.0	4.5	3.0	3.1	3.1	3.0	3.7	4.6	3.6	3.5	3.0
190.	3.0	3.1	5.2	4.6	3.0	3.1	3.0	3.7	4.8	3.9	4.5	3.0	3.0	3.1	3.0	3.7	5.0	3.4	3.5	3.0
195.	3.0	3.1	4.9	4.6	3.0	3.1	3.0	3.7	5.1	3.9	4.4	3.0	3.0	3.1	3.0	3.7	5.2	3.4	3.5	3.0
200.	3.0	3.1	4.9	4.6	3.0	3.1	3.0	3.7	5.2	3.9	4.3	3.0	3.0	3.1	3.0	3.7	5.1	3.4	3.5	3.0
205.	3.0	3.1	5.0	4.6	3.0	3.1	3.0	3.7	5.3	3.8	4.2	3.0	3.0	3.1	3.0	3.7	5.1	3.3	3.5	3.0

1

JOB: Sunport I-25 Improvement Proj RUN: 2-4 AM Build Sunport SB-I25

WIND ANGLE (DEGR)	CONCENTRATION (PPM) REC1	REC2	REC3	REC4	REC5	REC6	REC7	REC8	REC9	REC10	REC11	REC12	REC13	REC14	REC15	REC16	REC17	REC18	REC19	REC20
210.	3.0	3.1	5.1	4.6	3.0	3.1	3.0	3.7	5.5	3.8	4.0	3.0	3.0	3.1	3.0	3.7	5.0	3.2	3.5	3.0
215.	3.0	3.1	5.3	4.6	3.0	3.1	3.0	3.9	5.5	3.7	3.9	3.0	3.0	3.1	3.0	3.7	4.7	3.2	3.5	3.0
220.	3.0	3.1	5.3	4.7	3.0	3.1	3.0	3.9	5.5	3.6	3.9	3.0	3.0	3.1	3.0	3.7	4.7	3.1	3.6	3.0
225.	3.0	3.1	5.4	4.7	3.0	3.1	3.1	4.1	5.5	3.5	3.8	3.0	3.0	3.1	3.1	3.7	4.5	3.2	3.6	3.0
230.	3.0	3.1	5.5	4.6	3.0	3.1	3.1	4.3	5.3	3.4	3.7	3.0	3.0	3.1	3.1	3.7	4.4	3.2	3.6	3.0
235.	3.0	3.1	5.5	4.5	3.0	3.1	3.1	4.4	5.2	3.4	3.7	3.0	3.0	3.1	3.1	3.8	4.2	3.2	3.6	3.0
240.	3.0	3.1	5.7	4.4	3.0	3.1	3.1	4.5	5.1	3.3	3.6	3.0	3.0	3.1	3.1	3.9	4.2	3.2	3.6	3.0
245.	3.0	3.1	5.7	4.3	3.0	3.1	3.1	4.6	4.8	3.3	3.7	3.0	3.0	3.1	3.1	3.9	4.1	3.2	3.7	3.0
250.	3.1	3.1	5.5	4.1	3.0	3.1	3.1	4.8	4.7	3.3	3.7	3.1	3.0	3.1	3.1	4.2	3.9	3.1	3.7	3.0
255.	3.1	3.2	5.5	4.0	3.0	3.1	3.3	4.7	4.6	3.3	3.7	3.1	3.0	3.1	3.4	4.3	3.8	3.1	3.7	3.1
260.	3.3	3.4	5.3	3.9	3.0	3.1	3.4	4.6	4.6	3.3	3.7	3.2	3.0	3.1	3.6	4.3	3.9	3.1	3.7	3.2
265.	3.4	3.6	5.2	3.7	3.0	3.2	3.8	4.5	4.6	3.2	3.6	3.3	3.0	3.1	4.0	4.0	3.8	3.0	3.6	3.3
270.	3.7	4.1	4.9	3.5	3.1	3.2	4.3	4.2	4.5	3.1	3.4	3.5	3.0	3.1	4.4	3.9	3.8	3.0	3.4	3.5
275.	4.0	4.4	4.7	3.4	3.1	3.2	4.6	4.0	4.4	3.0	3.4	3.6	3.0	3.1	4.6	3.6	3.8	3.0	3.4	3.6
280.	4.3	4.8	4.7	3.2	3.2	3.4	5.0	3.8	4.4	3.0	3.2	3.8	3.1	3.2	5.0	3.5	3.8	3.0	3.2	3.7
285.	4.5	5.1	4.4	3.1	3.3	3.5	5.1	3.6	4.3	3.0	3.1	3.8	3.1	3.2	5.2	3.4	3.7	3.0	3.1	3.7
290.	4.7	5.3	4.4	3.0	3.3	3.5	5.2	3.6	4.3	3.0	3.0	3.9	3.1	3.2	5.1	3.4	3.7	3.0	3.0	3.7
295.	4.8	5.4	4.6	3.0	3.4	3.6	5.1	3.6	4.4	3.0	3.0	4.0	3.1	3.2	5.1	3.3	3.8	3.0	3.0	3.6
300.	5.1	5.4	4.6	3.0	3.4	3.7	5.0	3.6	4.5	3.0	3.0	4.1	3.1	3.2	5.0	3.3	3.8	3.0	3.0	3.6
305.	5.1	5.3	4.6	3.0	3.5	3.8	5.3	3.6	4.5	3.0	3.0	4.3	3.1	3.2	4.6	3.3	3.8	3.0	3.0	3.6
310.	5.2	5.1	4.6	3.0	3.6	3.9	5.2	3.6	4.5	3.0	3.0	4.5	3.1	3.3	4.6	3.3	3.8	3.0	3.0	3.6
315.	5.2	4.9	4.7	3.0	3.7	4.0	5.2	3.6	4.6	3.0	3.0	4.5	3.1	3.3	4.5	3.3	3.9	3.0	3.0	3.5
320.	5.1	4.8	4.6	3.0	3.8	4.0	5.0	3.6	4.6	3.0	3.0	4.7	3.2	3.4	4.5	3.2	3.9	3.0	3.0	3.5
325.	5.2	4.6	4.8	3.0	3.9	4.0	5.0	3.6	4.7	3.0	3.0	4.7	3.2	3.4	4.4	3.2	4.0	3.0	3.0	3.5
330.	5.2	5.0	4.8	3.0	4.0	4.2	4.9	3.5	4.7	3.0	3.0	4.8	3.3	3.5	4.4	3.2	4.0	3.0	3.0	3.5
335.	5.3	4.9	4.9	3.0	4.0	4.3	4.9	3.6	4.7	3.0	3.0	4.8	3.4	3.5	4.2	3.2	4.1	3.0	3.0	3.5
340.	5.3	5.2	4.8	3.0	4.0	4.2	4.9	3.6	4.6	3.0	3.0	4.8	3.4	3.6	4.2	3.2	4.1	3.0	3.0	3.5
345.	5.6	5.7	4.9	3.1	4.1	4.3	4.8	3.3	4.7	3.1	3.0	4.8	3.5	3.9	4.2	3.1	4.2	3.1	3.0	3.5
350.	5.7	5.6	4.8	3.2	4.4	4.4	4.4	3.3	4.5	3.1	3.0	4.8	3.7	3.8	4.1	3.1	4.2	3.1	3.0	3.5
355.	5.9	5.6	4.5	3.4	4.4	4.6	4.5	3.2	4.4	3.4	3.1	4.9	3.8	3.9	4.2	3.1	4.1	3.3	3.0	3.5
360.	6.0	5.5	4.2	3.6	4.5	4.4	4.3	3.1	4.1	3.5	3.1	5.1	3.9	3.8	4.1	3.0	3.9	3.5	3.0	3.5
MAX	6.0	5.7	5.7	5.3	4.6	4.6	5.3	4.8	5.5	4.8	4.8	5.7	3.9	3.9	5.2	4.3	5.2	4.4	4.8	5.0
DEGR.	0	345	240	100	10	355	305	250	210	140	120	25	0	345	285	255	195	135	105	70

THE HIGHEST CONCENTRATION IS 6.00 PPM AT 0 DEGREES FROM REC1 .

1

JOB: Sunport I-25 Improvement Proj RUN: 2-4 AM Build Sunport SB-I25

RECEPTOR - LINK MATRIX FOR THE ANGLE PRODUCING
THE MAXIMUM CONCENTRATION FOR EACH RECEPTOR

LINK #	CO/LINK (PPM) ANGLE (DEGREES) REC1	REC2	REC3	REC4	REC5	REC6	REC7	REC8	REC9	REC10	REC11	REC12	REC13	REC14	REC15	REC16	REC17	REC18	REC19	REC20
	0	345	240	100	10	355	305	250	210	140	120	25	0	345	285	255	195	135	105	70
1	0.4	0.2	0.3	0.0	0.1	0.1	0.1	0.3	0.2	0.0	0.3	0.4	0.1	0.1	0.2	0.2	0.1	0.0	0.3	0.5
2	0.0	0.8	0.0	0.8	0.2	0.3	1.2	0.1	0.0	0.4	0.4	0.0	0.1	0.1	1.4	0.3	0.1	0.3	0.4	0.2
3	0.0	0.0	0.0	0.1	0.0	0.0	0.0	0.1	0.0	0.0	0.0	0.0	0.0	0.0	0.0	0.1	0.0	0.0	0.0	0.0
4	0.1	0.1	0.2	0.1	0.0	0.0	0.1	0.1	0.1	0.0	0.2	0.1	0.0	0.0	0.1	0.1	0.0	0.0	0.3	0.1
5	0.0	0.0	0.0	0.0	0.0	0.0	0.0	0.0	0.0	0.0	0.0	0.0	0.0	0.0	0.0	0.0	0.0	0.0	0.0	0.0
6	0.1	0.1	0.1	0.1	0.1	0.1	0.0	0.0	0.1	0.1	0.0	0.1	0.0	0.0	0.0	0.0	0.1	0.1	0.0	0.0
7	0.0	0.1	0.0	0.0	0.1	0.1	0.0	0.0	0.0	0.0	0.0	0.0	0.1	0.1	0.0	0.0	0.0	0.0	0.0	0.0
8	0.6	0.6	0.7	0.5	0.4	0.4	0.2	0.2	0.8	0.5	0.1	0.4	0.3	0.2	0.1	0.1	0.9	0.5	0.1	0.1
9	1.0	0.2	0.9	0.0	0.2	0.2	0.3	0.6	0.5	0.0	0.8	1.4	0.2	0.3	0.3	0.3	0.3	0.0	0.7	1.0
10	0.4	0.0	0.0	0.0	0.1	0.0	0.0	0.0	0.0	0.0	0.0	0.0	0.0	0.0	0.0	0.0	0.0	0.0	0.0	0.0
11	0.0	0.1	0.0	0.1	0.1	0.1	0.2	0.1	0.0	0.1	0.0	0.0	0.0	0.0	0.1	0.1	0.0	0.0	0.0	0.0
12	0.0	0.1	0.0	0.2	0.1	0.1	0.1	0.2	0.0	0.1	0.0	0.0	0.0	0.0	0.0	0.1	0.0	0.0	0.0	0.0
13	0.3	0.3	0.5	0.2	0.2	0.2	0.1	0.1	0.7	0.4	0.0	0.2	0.1	0.1	0.0	0.0	0.7	0.5	0.0	0.1
14	0.0	0.0	0.0	0.0	0.0	0.0	0.0	0.0	0.0	0.0	0.0	0.0	0.0	0.0	0.0	0.0	0.0	0.0	0.0	0.0
15	0.1	0.1	0.0	0.2	0.0	0.0	0.0	0.0	0.1	0.2	0.0	0.1	0.0	0.0	0.0	0.0	0.0	0.0	0.0	0.0

RUN ENDED ON 12/17/11 AT 21:13

1 CAL3QHC (93157)
IBM-PC VERSION (2.01)

RUN NAME: 26.DAT _____

RUN BEGIN ON 12/17/11 AT 21:13

CAL3QHC: LINE SOURCE DISPERSION MODEL - VERSION 2.0, JANUARY 1992

JOB: Sunport I-25 Improvement Proj RUN: 2-6 PM Build Sunport SB-I25

SITE & METEOROLOGICAL VARIABLES

VS = 0.0 CM/S VD = 0.0 CM/S Z0 = 175. CM
U = 1.0 M/S CLAS = 4 (D) ATIM = 60. MINUTES MIXH = 1000. M AMB = 3.0 PPM

LINK VARIABLES

LINK DESCRIPTION	LINK COORDINATES (FT) X1	Y1	X2	Y2	LENGTH (FT)	BRG (DEG)	TYPE	VPH	EF (G/MI)	H (FT)	W (FT)	V/C	QUEUE (VEH)
1. EB A	-1000.0	-20.0	0.0	-20.0	1000.	90.	AG	820.	14.1	0.0	68.0		
2. EB D	0.0	-32.0	1000.0	-32.0	1000.	90.	AG	1768.	14.1	0.0	56.0		
3. WB A	1000.0	26.0	0.0	26.0	1000.	270.	AG	757.	14.1	0.0	44.0		
4. WB D	0.0	14.0	-1000.0	14.0	1000.	270.	AG	875.	14.1	0.0	44.0		
5. WB L	0.0	2.0	-1000.0	2.0	1000.	270.	AG	754.	14.1	0.0	44.0		
6. SB A	-18.0	1000.0	-18.0	0.0	1000.	180.	AG	125.	14.1	0.0	44.0		
7. SB D	-6.0	0.0	-6.0	-1000.0	1000.	180.	AG	844.	14.1	0.0	32.0		
8. SB L	0.0	1000.0	0.0	0.0	1000.	180.	AG	1031.	14.1	0.0	44.0		
9. EB T Q	-18.0	-20.0	-103.7	-20.0	86.	270.	AG	618.	100.0	0.0	36.0	0.63	4.4
10. EB R Q	-18.0	-44.0	-47.0	-44.0	29.	270.	AG	206.	100.0	0.0	12.0	0.21	1.5
11. WB L Q	18.0	2.0	27.6	2.0	10.	90.	AG	418.	100.0	0.0	24.0	0.07	0.5
12. WB T Q	18.0	26.0	98.6	26.0	81.	90.	AG	251.	100.0	0.0	24.0	0.41	4.1
13. SB L Q	0.0	32.0	0.0	175.6	144.	360.	AG	328.	100.0	0.0	24.0	0.75	7.3
14. SB T Q	-18.0	32.0	-18.0	34.0	2.	360.	AG	164.	100.0	0.0	12.0	0.01	0.1
15. SB R Q	-30.0	32.0	-30.0	64.9	33.	360.	AG	164.	100.0	0.0	12.0	0.17	1.7

1

JOB: Sunport I-25 Improvement Proj RUN: 2-6 PM Build Sunport SB-I25

ADDITIONAL QUEUE LINK PARAMETERS

LINK DESCRIPTION	CYCLE LENGTH (SEC)	RED TIME (SEC)	CLEARANCE LOST TIME (SEC)	APPROACH VOL (VPH)	SATURATION FLOW RATE (VPH)	IDLE EM FAC (gm/hr)	SIGNAL TYPE	ARRIVAL RATE
9. EB T Q	90	64	5.5	737	1900	108.00	3	3
10. EB R Q	90	64	5.5	83	1900	108.00	3	3
11. WB L Q	90	65	4.5	54	1900	108.00	3	3
12. WB T Q	90	39	5.5	757	1900	108.00	3	3
13. SB L Q	90	51	4.5	1031	1900	108.00	3	3
14. SB T Q	90	51	4.5	7	1900	108.00	3	3
15. SB R Q	90	51	4.5	118	1900	108.00	3	3

RECEPTOR LOCATIONS

RECEPTOR	COORDINATES (FT) X	Y	Z
1. 1	-28.0	-66.0	5.0
2. 2	16.0	-66.0	5.0
3. 3	28.0	54.0	5.0
4. 4	-52.0	42.0	5.0
5. 5	-28.0	-146.0	5.0
6. 6	16.0	-146.0	5.0
7. 7	96.0	-66.0	5.0
8. 8	108.0	54.0	5.0
9. 9	28.0	134.0	5.0
10. 10	-52.0	122.0	5.0
11. 11	-132.0	42.0	5.0
12. 12	-108.0	-66.0	5.0
13. 13	-28.0	-266.0	5.0
14. 14	16.0	-266.0	5.0
15. 15	216.0	-66.0	5.0
16. 16	228.0	54.0	5.0
17. 17	28.0	254.0	5.0
18. 18	-52.0	242.0	5.0
19. 19	-252.0	42.0	5.0
20. 20	-228.0	-66.0	5.0

1

JOB: Sunport I-25 Improvement Proj RUN: 2-6 PM Build Sunport SB-I25

MODEL RESULTS

REMARKS : In search of the angle corresponding to the maximum concentration, only the first angle, of the angles with same maximum concentrations, is indicated as maximum.

WIND ANGLE RANGE: 0.-360.

WIND ANGLE (DEGR)	CONCENTRATION (PPM) REC1	REC2	REC3	REC4	REC5	REC6	REC7	REC8	REC9	REC10	REC11	REC12	REC13	REC14	REC15	REC16	REC17	REC18	REC19	REC20
0.	6.2	5.1	3.9	3.5	4.7	4.3	4.3	3.1	3.6	3.4	3.1	4.3	4.3	4.0	4.0	3.0	3.5	3.2	3.0	3.7
5.	6.3	4.9	3.6	3.5	4.7	4.3	4.2	3.1	3.4	3.4	3.1	4.6	4.2	4.1	4.0	3.0	3.4	3.4	3.0	3.7
10.	6.2	4.7	3.4	3.7	4.8	3.9	4.0	3.0	3.3	3.5	3.2	4.8	4.1	3.8	3.9	3.0	3.3	3.5	3.1	3.8
15.	5.8	4.5	3.2	3.8	4.6	3.8	4.0	3.0	3.2	3.5	3.2	5.0	4.2	3.6	3.9	3.0	3.2	3.5	3.1	3.8
20.	5.5	4.5	3.1	3.9	4.3	3.6	3.9	3.0	3.1	3.5	3.2	5.2	4.2	3.4	3.9	3.0	3.1	3.5	3.1	3.8
25.	5.3	4.4	3.1	4.1	4.3	3.5	3.9	3.0	3.1	3.6	3.2	5.3	3.9	3.3	3.9	3.0	3.1	3.5	3.1	3.8
30.	5.3	4.2	3.0	4.1	4.1	3.5	3.9	3.0	3.0	3.6	3.3	5.5	3.8	3.3	3.9	3.0	3.0	3.5	3.1	3.8

35.	4.7	4.2	3.0	4.2	4.0	3.6	4.0	3.0	3.0	3.7	3.3	5.5	3.8	3.3	4.0	3.0	3.0	3.5	3.1	3.9
40.	4.8	4.2	3.0	4.3	4.0	3.5	4.0	3.0	3.0	3.8	3.3	5.4	3.8	3.3	4.0	3.0	3.0	3.5	3.1	3.9
45.	4.8	4.1	3.0	4.3	4.0	3.5	4.1	3.0	3.0	3.8	3.4	5.6	3.7	3.3	4.1	3.0	3.0	3.5	3.1	4.0
50.	4.5	4.2	3.0	4.3	3.9	3.5	4.1	3.0	3.0	3.8	3.4	5.5	3.7	3.3	4.1	3.0	3.0	3.4	3.1	4.1
55.	4.5	4.2	3.0	4.3	3.9	3.5	4.1	3.0	3.0	3.9	3.5	5.3	3.7	3.3	4.1	3.0	3.0	3.4	3.2	4.3
60.	4.5	4.2	3.0	4.3	3.9	3.5	4.2	3.0	3.0	3.9	3.5	5.3	3.7	3.3	4.2	3.0	3.0	3.4	3.2	4.4
65.	4.6	4.3	3.0	4.3	3.9	3.5	4.3	3.0	3.0	3.8	3.5	5.2	3.7	3.3	4.3	3.0	3.0	3.3	3.2	4.7
70.	4.5	4.3	3.1	4.4	3.9	3.5	4.3	3.1	3.0	3.9	3.5	4.9	3.7	3.3	4.3	3.1	3.0	3.3	3.3	4.7
75.	4.6	4.4	3.1	4.5	3.9	3.5	4.4	3.1	3.0	3.9	3.8	4.7	3.6	3.2	4.4	3.1	3.0	3.3	3.5	4.7
80.	4.6	4.4	3.3	4.7	3.8	3.4	4.4	3.3	3.0	3.9	4.0	4.6	3.5	3.1	4.4	3.3	3.0	3.3	3.8	4.5
85.	4.5	4.2	3.6	4.9	3.8	3.4	4.2	3.4	3.0	4.1	4.2	4.2	3.5	3.1	4.2	3.4	3.0	3.3	4.0	4.2
90.	4.3	4.0	3.8	5.1	3.6	3.2	4.0	3.6	3.2	4.1	4.4	4.1	3.4	3.0	4.0	3.6	3.0	3.3	4.4	4.1
95.	4.1	3.8	4.1	5.4	3.5	3.1	3.8	3.9	3.2	4.2	4.6	3.7	3.4	3.0	3.6	3.8	3.0	3.4	4.6	3.8
100.	3.8	3.4	4.2	5.3	3.4	3.0	3.4	3.9	3.3	4.3	4.9	3.4	3.4	3.0	3.4	3.9	3.1	3.5	5.0	3.5
105.	3.6	3.3	4.3	5.4	3.4	3.0	3.3	4.0	3.5	4.4	5.1	3.3	3.4	3.0	3.3	4.0	3.2	3.5	4.9	3.2
110.	3.5	3.2	4.4	5.3	3.4	3.0	3.2	4.0	3.5	4.5	5.2	3.2	3.4	3.0	3.2	4.0	3.3	3.6	4.8	3.2
115.	3.5	3.1	4.5	5.1	3.4	3.0	3.1	4.0	3.5	4.5	5.2	3.2	3.4	3.0	3.1	4.0	3.3	3.6	4.6	3.1
120.	3.4	3.1	4.5	4.8	3.4	3.0	3.1	4.0	3.5	4.6	5.2	3.2	3.4	3.0	3.1	4.0	3.3	3.8	4.6	3.1
125.	3.4	3.0	4.5	4.9	3.4	3.0	3.0	3.9	3.5	4.7	5.3	3.2	3.4	3.0	3.0	3.9	3.3	3.8	4.4	3.1
130.	3.4	3.0	4.6	4.8	3.4	3.0	3.0	3.9	3.5	4.7	5.3	3.2	3.4	3.0	3.0	3.9	3.3	3.8	4.3	3.1
135.	3.4	3.0	4.6	4.7	3.4	3.0	3.0	3.9	3.6	4.5	5.2	3.2	3.4	3.0	3.0	3.9	3.3	4.0	4.2	3.1
140.	3.5	3.0	4.5	4.7	3.5	3.0	3.0	3.8	3.6	4.5	4.9	3.2	3.5	3.0	3.0	3.8	3.3	4.2	4.1	3.1
145.	3.5	3.0	4.5	4.8	3.5	3.0	3.0	3.8	3.5	4.5	5.0	3.2	3.5	3.0	3.0	3.8	3.3	4.3	4.1	3.1
150.	3.5	3.0	4.4	5.2	3.5	3.0	3.0	3.7	3.6	4.6	4.9	3.2	3.5	3.0	3.0	3.7	3.3	4.3	4.1	3.1
155.	3.6	3.0	4.4	5.1	3.6	3.0	3.0	3.7	3.6	4.6	4.7	3.2	3.6	3.0	3.0	3.7	3.3	4.3	4.1	3.1
160.	3.6	3.1	4.4	5.2	3.6	3.1	3.0	3.7	3.6	4.3	4.5	3.2	3.6	3.1	3.0	3.7	3.5	4.3	4.1	3.1
165.	3.6	3.1	4.5	5.3	3.6	3.1	3.0	3.7	3.8	4.2	4.4	3.2	3.6	3.1	3.0	3.7	3.6	4.2	4.0	3.1
170.	3.6	3.2	4.6	5.3	3.6	3.2	3.0	3.7	3.8	4.3	4.2	3.2	3.6	3.2	3.0	3.7	3.9	4.2	3.9	3.1
175.	3.6	3.4	4.8	5.5	3.6	3.4	3.0	3.8	4.0	4.2	4.2	3.1	3.6	3.3	3.0	3.7	4.0	4.2	4.0	3.0
180.	3.5	3.5	4.9	5.4	3.5	3.5	3.1	3.9	4.3	4.2	4.2	3.1	3.5	3.5	3.0	3.7	4.2	3.8	4.0	3.0
185.	3.4	3.6	4.8	5.4	3.4	3.6	3.1	3.9	4.5	4.0	4.0	3.0	3.3	3.6	3.0	3.7	4.3	3.8	4.0	3.0
190.	3.2	3.6	5.1	5.2	3.2	3.6	3.2	4.0	5.0	4.0	4.0	3.0	3.2	3.6	3.1	3.8	4.7	3.6	4.0	3.0
195.	3.1	3.6	5.1	5.1	3.1	3.6	3.2	4.2	5.2	3.8	4.0	3.0	3.1	3.6	3.1	3.8	4.7	3.4	4.0	3.0
200.	3.1	3.6	5.1	5.0	3.1	3.6	3.2	4.3	5.2	3.7	4.0	3.0	3.1	3.6	3.1	3.8	4.6	3.4	4.0	3.0
205.	3.0	3.6	5.3	5.0	3.0	3.6	3.2	4.3	5.4	3.6	4.0	3.0	3.0	3.6	3.1	3.8	4.4	3.4	4.0	3.0

1

JOB: Sunport I-25 Improvement Proj RUN: 2-6 PM Build Sunport SB-I25

WIND ANGLE (DEGR)	CONCENTRATION (PPM) REC1	REC2	REC3	REC4	REC5	REC6	REC7	REC8	REC9	REC10	REC11	REC12	REC13	REC14	REC15	REC16	REC17	REC18	REC19	REC20
210.	3.0	3.5	5.4	4.9	3.0	3.5	3.2	4.4	5.4	3.6	4.0	3.0	3.0	3.5	3.1	3.8	4.2	3.3	4.0	3.0
215.	3.0	3.5	5.4	4.8	3.0	3.5	3.2	4.5	5.2	3.5	4.0	3.0	3.0	3.5	3.1	3.9	4.2	3.3	4.0	3.0
220.	3.0	3.5	5.4	4.6	3.0	3.5	3.2	4.7	5.3	3.6	4.0	3.0	3.0	3.5	3.1	3.9	4.0	3.3	4.0	3.0
225.	3.0	3.4	5.5	4.5	3.0	3.4	3.2	4.7	5.1	3.5	4.0	3.0	3.0	3.4	3.1	3.9	3.9	3.3	4.0	3.0
230.	3.0	3.4	5.7	4.5	3.0	3.4	3.2	4.8	5.1	3.6	4.1	3.0	3.0	3.4	3.1	3.9	3.8	3.3	4.1	3.0
235.	3.0	3.4	5.5	4.3	3.0	3.4	3.2	5.2	5.0	3.6	4.1	3.0	3.0	3.4	3.1	4.0	3.8	3.3	4.1	3.0
240.	3.0	3.4	5.8	4.3	3.0	3.4	3.2	5.3	5.0	3.6	4.2	3.0	3.0	3.4	3.2	4.2	3.8	3.3	4.2	3.0
245.	3.0	3.4	5.8	4.4	3.0	3.4	3.2	5.3	4.9	3.6	4.3	3.0	3.0	3.4	3.2	4.3	3.7	3.3	4.3	3.0
250.	3.0	3.4	5.6	4.3	3.0	3.4	3.2	5.3	4.8	3.6	4.3	3.0	3.0	3.4	3.2	4.5	3.7	3.3	4.3	3.0
255.	3.1	3.5	5.6	4.3	3.0	3.4	3.3	5.1	4.7	3.5	4.3	3.1	3.0	3.4	3.3	4.6	3.7	3.3	4.3	3.1
260.	3.1	3.5	5.5	4.3	3.0	3.4	3.5	5.0	4.6	3.4	4.3	3.1	3.0	3.4	3.6	4.6	3.5	3.1	4.3	3.1
265.	3.4	3.9	5.5	4.2	3.0	3.4	3.9	4.7	4.6	3.3	4.2	3.4	3.0	3.4	3.9	4.7	3.5	3.0	4.1	3.4
270.	3.6	4.2	5.1	4.0	3.1	3.5	4.1	4.6	4.6	3.3	3.9	3.5	3.0	3.4	4.3	4.1	3.5	3.0	3.9	3.5
275.	3.9	4.6	4.8	3.7	3.3	3.7	4.8	4.1	4.3	3.0	3.6	3.8	3.0	3.4	4.5	4.0	3.5	3.0	3.6	3.8
280.	4.1	4.9	4.6	3.4	3.3	3.7	4.9	3.9	4.2	3.0	3.4	3.8	3.0	3.5	4.8	3.8	3.4	3.0	3.4	3.8
285.	4.4	5.4	4.5	3.2	3.4	3.8	5.0	3.6	4.2	3.0	3.2	3.9	3.3	3.7	5.0	3.4	3.4	3.0	3.2	3.9
290.	4.6	5.6	4.4	3.1	3.4	3.8	4.9	3.5	4.2	3.0	3.1	4.0	3.3	3.7	4.9	3.3	3.4	3.0	3.1	3.9
295.	4.7	5.6	4.3	3.0	3.4	3.9	5.0	3.6	4.2	3.0	3.0	3.9	3.3	3.7	4.8	3.2	3.4	3.0	3.0	3.9
300.	4.7	5.7	4.4	3.0	3.4	4.0	4.8	3.5	4.3	3.0	3.0	3.8	3.3	3.7	4.6	3.2	3.5	3.0	3.0	3.8
305.	4.9	5.6	4.4	3.0	3.4	4.0	4.9	3.5	4.3	3.0	3.0	3.8	3.3	3.7	4.5	3.2	3.5	3.0	3.0	3.8
310.	5.2	5.4	4.4	3.0	3.5	4.1	4.9	3.5	4.3	3.0	3.0	3.8	3.3	3.7	4.5	3.1	3.5	3.0	3.0	3.8
315.	5.2	5.3	4.4	3.0	3.5	4.1	4.8	3.4	4.2	3.0	3.0	3.7	3.3	3.7	4.3	3.1	3.5	3.0	3.0	3.7
320.	5.3	5.3	4.6	3.0	3.6	4.3	4.7	3.4	4.3	3.0	3.0	3.7	3.3	3.9	4.3	3.1	3.6	3.0	3.0	3.7
325.	5.4	5.1	4.7	3.0	3.7	4.5	4.7	3.3	4.3	3.0	3.0	3.7	3.3	3.9	4.2	3.1	3.7	3.0	3.0	3.7
330.	5.5	5.0	4.7	3.0	3.8	4.4	4.5	3.3	4.2	3.0	3.0	3.7	3.4	4.0	4.0	3.1	3.7	3.0	3.0	3.7
335.	5.5	5.1	4.7	3.0	3.9	4.6	4.8	3.3	4.2	3.0	3.0	3.7	3.4	4.0	4.0	3.1	3.8	3.0	3.0	3.7
340.	5.5	5.2	4.6	3.0	3.9	4.6	4.7	3.2	4.1	3.0	3.0	3.8	3.6	4.2	4.0	3.1	3.8	3.0	3.0	3.7
345.	5.6	5.2	4.5	3.0	4.4	4.7	4.7	3.2	4.0	3.0	3.0	3.9	3.7	4.3	4.0	3.1	3.8	3.0	3.0	3.7
350.	5.8	5.6	4.4	3.1	4.4	4.6	4.4	3.2	3.9	3.1	3.0	3.9	3.9	4.4	4.0	3.1	3.8	3.1	3.0	3.7
355.	6.0	5.5	4.1	3.2	4.4	4.8	4.5	3.1	3.8	3.2	3.0	4.2	4.1	4.2	4.1	3.0	3.7	3.2	3.0	3.7
360.	6.2	5.1	3.9	3.5	4.7	4.3	4.3	3.1	3.6	3.4	3.1	4.3	4.3	4.0	4.0	3.0	3.5	3.2	3.0	3.7
MAX	6.3	5.7	5.8	5.5	4.8	4.8	5.0	5.3	5.4	4.7	5.3	5.6	4.3	4.4	5.0	4.7	4.7	4.3	5.0	4.7
DEGR.	5	300	245	175	10	355	285	240	205	125	125	45	0	350	285	265	190	145	100	70

THE HIGHEST CONCENTRATION IS 6.30 PPM AT 5 DEGREES FROM REC1 .

1

JOB: Sunport I-25 Improvement Proj RUN: 2-6 PM Build Sunport SB-I25

RECEPTOR - LINK MATRIX FOR THE ANGLE PRODUCING
THE MAXIMUM CONCENTRATION FOR EACH RECEPTOR

LINK #	CO/LINK (PPM) ANGLE (DEGREES) REC1	REC2	REC3	REC4	REC5	REC6	REC7	REC8	REC9	REC10	REC11	REC12	REC13	REC14	REC15	REC16	REC17	REC18	REC19	REC20
	5	300	245	175	10	355	285	240	205	125	125	45	0	350	285	265	190	145	100	70
1	0.3	0.4	0.3	0.3	0.1	0.1	0.3	0.2	0.1	0.0	0.2	0.3	0.1	0.1	0.1	0.2	0.1	0.0	0.2	0.4
2	0.0	0.2	0.0	0.0	0.1	0.2	0.6	0.2	0.0	0.3	0.2	0.0	0.1	0.1	1.0	0.1	0.1	0.2	0.3	0.2
3	0.0	0.0	0.1	0.0	0.1	0.1	0.0	0.4	0.0	0.2	0.0	0.1	0.0	0.0	0.1	0.4	0.0	0.1	0.1	0.1
4	0.2	0.2	0.4	0.4	0.1	0.1	0.2	0.1	0.1	0.0	0.5	0.2	0.1	0.1	0.2	0.2	0.1	0.0	0.5	0.1
5	0.2	0.2	0.3	0.3	0.1	0.1	0.2	0.1	0.1	0.0	0.3	0.2	0.1	0.1	0.1	0.2	0.0	0.0	0.3	0.2
6	0.1	0.0	0.0	0.0	0.0	0.0	0.0	0.0	0.0	0.1	0.0	0.0	0.0	0.0	0.0	0.0	0.0	0.1	0.0	0.0
7	0.2	0.4	0.0	0.3	0.4	0.4	0.1	0.1	0.1	0.0	0.1	0.0	0.4	0.5	0.0	0.0	0.1	0.0	0.0	0.0
8	0.5	0.0	0.4	0.0	0.3	0.3	0.0	0.1	0.6	0.3	0.0	0.2	0.2	0.2	0.1	0.1	0.6	0.4	0.1	0.1
9	0.9	1.1	0.5	1.1	0.2	0.2	0.5	0.4	0.4	0.0	0.9	1.3	0.2	0.2	0.2	0.2	0.2	0.0	0.3	0.4
10	0.4	0.2	0.0	0.1	0.1	0.0	0.1	0.0	0.0	0.0	0.1	0.0	0.0	0.0	0.0	0.0	0.0	0.0	0.0	0.0
11	0.0	0.0	0.0	0.0	0.0	0.0	0.0	0.1	0.0	0.0	0.0	0.0	0.0	0.0	0.0	0.0	0.0	0.0	0.0	0.0
12	0.0	0.0	0.0	0.0	0.1	0.1	0.0	0.6	0.0	0.2	0.0	0.1	0.0	0.0	0.1	0.2	0.0	0.1	0.1	0.1
13	0.4	0.0	0.7	0.0	0.2	0.2	0.0	0.0	0.9	0.6	0.0	0.2	0.1	0.1	0.1	0.1	0.5	0.4	0.1	0.1
14	0.0	0.0	0.0	0.0	0.0	0.0	0.0	0.0	0.0	0.0	0.0	0.0	0.0	0.0	0.0	0.0	0.0	0.0	0.0	0.0

15	*	0.1	0.0	0.1	0.0	0.0	0.0	0.0	0.0	0.1	0.0	0.0	0.0	0.0	0.0	0.0	0.0	0.0	0.0	0.0

RUN ENDED ON 12/17/11 AT 21:13

1 CAL3QHC (93157)
IBM-PC VERSION (2.01)
RUN NAME: 34.DAT □□□□□□□□□□□□□□□□□□□□

RUN BEGIN ON 12/17/11 AT 21:13

CAL3QHC: LINE SOURCE DISPERSION MODEL - VERSION 2.0, JANUARY 1992

JOB: Sunport I-25 Improvement Proj RUN: 3-4 AM Build Sunport Braodway

SITE & METEOROLOGICAL VARIABLES

VS = 0.0 CM/S VD = 0.0 CM/S Z0 = 175. CM
U = 1.0 M/S CLAS = 4 (D) ATIM = 60. MINUTES MIXH = 1000. M AMB = 3.0 PPM

LINK VARIABLES

LINK DESCRIPTION	LINK COORDINATES (FT) X1	Y1	X2	Y2	LENGTH (FT)	BRG (DEG)	TYPE	VPH	EF (G/MI)	H (FT)	W (FT)	V/C	QUEUE (VEH)
1. EB A	-1000.0	-14.0	0.0	-14.0	1000.	90.	AG	533.	14.1	0.0	44.0		
2. EB D	0.0	-14.0	1000.0	-14.0	1000.	90.	AG	1044.	14.1	0.0	32.0		
3. EB L	-1000.0	-2.0	0.0	-2.0	1000.	90.	AG	191.	14.1	0.0	32.0		
4. WB A	1000.0	20.0	0.0	20.0	1000.	270.	AG	309.	14.1	0.0	44.0		
5. WB D	0.0	14.0	-1000.0	14.0	1000.	270.	AG	513.	14.1	0.0	32.0		
6. WB L	1000.0	2.0	0.0	2.0	1000.	270.	AG	109.	14.1	0.0	44.0		
7. NB A	20.0	-1000.0	20.0	0.0	1000.	360.	AG	1257.	14.1	0.0	44.0		
8. NB D	20.0	0.0	20.0	1000.0	1000.	360.	AG	1107.	14.1	0.0	44.0		
9. NB L	2.0	-1000.0	2.0	0.0	1000.	360.	AG	268.	14.1	0.0	32.0		
10. SB A	-20.0	1000.0	-20.0	0.0	1000.	180.	AG	193.	14.1	0.0	44.0		
11. SB D	-20.0	0.0	-20.0	-1000.0	1000.	180.	AG	342.	14.1	0.0	44.0		
12. SB L	-2.0	1000.0	-2.0	0.0	1000.	180.	AG	146.	14.1	0.0	32.0		
13. EB L Q	-38.0	-2.0	-119.5	-2.0	81.	270.	AG	205.	100.0	0.0	12.0	0.43	4.1
14. EB T Q	-38.0	-14.0	-247.4	-14.0	209.	270.	AG	205.	100.0	0.0	12.0	0.90	10.6
15. EB R Q	-38.0	-26.0	-95.6	-26.0	58.	270.	AG	205.	100.0	0.0	12.0	0.31	2.9
16. WB L Q	38.0	2.0	61.0	2.0	23.	90.	AG	411.	100.0	0.0	24.0	0.12	1.2
17. WB T Q	38.0	20.0	102.0	20.0	64.	90.	AG	205.	100.0	0.0	12.0	0.34	3.3
18. WB R Q	38.0	32.0	105.8	32.0	68.	90.	AG	205.	100.0	0.0	12.0	0.36	3.4
19. NB L Q	2.0	-32.0	2.0	-155.1	123.	180.	AG	216.	100.0	0.0	12.0	0.72	6.3
20. NB T Q	20.0	-32.0	20.0	-3001.8	2970.	180.	AG	432.	100.0	0.0	24.0	1.69	150.9
21. SB L Q	-2.0	26.0	-2.0	91.5	65.	360.	AG	216.	100.0	0.0	12.0	0.39	3.3
22. SB T Q	-20.0	26.0	-20.0	69.0	43.	360.	AG	432.	100.0	0.0	24.0	0.26	2.2

1

JOB: Sunport I-25 Improvement Proj RUN: 3-4 AM Build Sunport Braodway

ADDITIONAL QUEUE LINK PARAMETERS

LINK DESCRIPTION	CYCLE LENGTH (SEC)	RED TIME (SEC)	CLEARANCE LOST TIME (SEC)	APPROACH VOL (VPH)	SATURATION FLOW RATE (VPH)	IDLE EM FAC (gm/hr)	SIGNAL TYPE	ARRIVAL RATE
13. EB L Q	110	78	4.5	191	1900	108.00	3	3
14. EB T Q	110	78	4.5	398	1900	108.00	3	3
15. EB R Q	110	78	4.5	135	1900	108.00	3	3
16. WB L Q	110	78	4.5	109	1900	108.00	3	3
17. WB T Q	110	78	4.5	150	1900	108.00	3	3
18. WB R Q	110	78	4.5	159	1900	108.00	3	3
19. NB L Q	110	82	4.5	268	1900	108.00	3	3
20. NB T Q	110	82	4.5	1257	1900	108.00	3	3
21. SB L Q	110	82	4.5	146	1900	108.00	3	3
22. SB T Q	110	82	4.5	193	1900	108.00	3	3

RECEPTOR LOCATIONS

RECEPTOR	COORDINATES (FT) X	Y	Z
1. 1	-48.0	-48.0	5.0
2. 2	48.0	-42.0	5.0
3. 3	48.0	54.0	5.0
4. 4	-48.0	36.0	5.0
5. 5	-48.0	-128.0	5.0
6. 6	48.0	-122.0	5.0
7. 7	128.0	-42.0	5.0
8. 8	128.0	54.0	5.0
9. 9	48.0	134.0	5.0
10. 10	-48.0	116.0	5.0
11. 11	-128.0	36.0	5.0
12. 12	-128.0	-48.0	5.0
13. 13	-48.0	-248.0	5.0
14. 14	48.0	-242.0	5.0
15. 15	248.0	-42.0	5.0
16. 16	248.0	54.0	5.0
17. 17	48.0	254.0	5.0
18. 18	-48.0	236.0	5.0
19. 19	-248.0	36.0	5.0
20. 20	-248.0	-48.0	5.0

1

JOB: Sunport I-25 Improvement Proj RUN: 3-4 AM Build Sunport Braodway

MODEL RESULTS

REMARKS : In search of the angle corresponding to the maximum concentration, only the first angle, of the angles with same maximum concentrations, is indicated as maximum.

WIND ANGLE RANGE: 0.-360.

WIND * CONCENTRATION
ANGLE * (PPM)

(DEGR)	REC1	REC2	REC3	REC4	REC5	REC6	REC7	REC8	REC9	REC10	REC11	REC12	REC13	REC14	REC15	REC16	REC17	REC18	REC19	REC20
0.	4.8	5.0	3.6	3.3	4.0	4.4	3.6	3.1	3.6	3.3	3.1	4.0	3.8	4.6	3.5	3.0	3.6	3.3	3.0	3.6
5.	5.1	4.9	3.4	3.4	4.2	4.2	3.6	3.1	3.4	3.4	3.1	4.0	3.9	4.1	3.5	3.0	3.4	3.4	3.0	3.6
10.	5.2	4.7	3.3	3.6	4.3	3.9	3.5	3.0	3.3	3.5	3.1	4.1	4.3	3.7	3.5	3.0	3.3	3.5	3.0	3.7
15.	5.1	4.5	3.2	3.7	4.1	3.7	3.5	3.0	3.2	3.6	3.2	4.1	4.4	3.4	3.5	3.0	3.2	3.6	3.1	3.8
20.	5.1	4.3	3.1	3.8	4.2	3.7	3.5	3.0	3.1	3.6	3.2	4.2	4.5	3.3	3.5	3.0	3.1	3.6	3.1	3.8
25.	4.8	4.2	3.1	4.0	4.5	3.4	3.5	3.0	3.1	3.6	3.2	4.3	4.6	3.2	3.5	3.0	3.1	3.6	3.1	3.8
30.	4.5	4.1	3.0	4.1	4.6	3.2	3.5	3.0	3.0	3.5	3.2	4.4	4.5	3.1	3.5	3.0	3.0	3.5	3.1	3.9
35.	4.3	3.9	3.0	4.2	4.7	3.3	3.5	3.0	3.0	3.5	3.2	4.6	4.6	3.1	3.5	3.0	3.0	3.5	3.1	3.9
40.	4.4	3.9	3.0	4.4	5.0	3.3	3.6	3.0	3.0	3.5	3.2	4.7	4.6	3.1	3.6	3.0	3.0	3.5	3.1	3.9
45.	4.4	3.8	3.0	4.4	5.0	3.3	3.6	3.0	3.0	3.4	3.2	4.7	4.5	3.1	3.6	3.0	3.0	3.4	3.1	3.9
50.	4.3	3.8	3.0	4.6	4.9	3.3	3.6	3.0	3.0	3.4	3.2	4.8	4.4	3.1	3.6	3.0	3.0	3.4	3.1	4.0
55.	4.4	3.7	3.0	4.7	4.8	3.3	3.6	3.0	3.0	3.4	3.3	4.8	4.4	3.1	3.6	3.0	3.0	3.4	3.1	4.1
60.	4.5	3.7	3.0	4.7	4.8	3.3	3.7	3.0	3.0	3.4	3.4	4.7	4.4	3.1	3.7	3.0	3.0	3.4	3.1	4.2
65.	4.5	3.7	3.0	4.8	4.7	3.3	3.7	3.0	3.0	3.4	3.4	5.0	4.2	3.1	3.7	3.0	3.0	3.4	3.1	4.2
70.	4.7	3.8	3.0	4.9	4.7	3.3	3.8	3.0	3.0	3.4	3.5	4.9	4.2	3.1	3.8	3.0	3.0	3.4	3.1	4.3
75.	4.9	3.8	3.0	5.0	4.7	3.3	3.8	3.0	3.0	3.4	3.5	4.7	4.2	3.1	3.8	3.0	3.0	3.4	3.3	4.4
80.	4.9	3.7	3.2	5.1	4.6	3.2	3.7	3.2	3.0	3.4	4.0	4.6	4.2	3.1	3.7	3.2	3.0	3.4	3.4	4.5
85.	4.8	3.6	3.2	5.2	4.6	3.1	3.6	3.2	3.0	3.4	4.2	4.4	4.2	3.0	3.6	3.2	3.0	3.4	3.6	4.2
90.	4.9	3.5	3.4	5.6	4.6	3.1	3.5	3.3	3.1	3.5	4.2	4.3	4.2	3.0	3.5	3.3	3.0	3.4	4.0	4.1
95.	4.8	3.3	3.5	5.5	4.6	3.1	3.3	3.4	3.1	3.6	4.5	4.0	4.2	3.0	3.3	3.4	3.0	3.4	4.3	3.7
100.	4.6	3.2	3.7	5.5	4.4	3.0	3.2	3.5	3.2	3.7	4.7	3.8	4.1	3.0	3.2	3.5	3.0	3.5	4.4	3.7
105.	4.5	3.1	3.8	5.3	4.3	3.0	3.1	3.5	3.3	3.8	4.6	4.0	4.1	3.0	3.1	3.5	3.1	3.5	4.4	3.5
110.	4.4	3.1	3.9	5.1	4.3	3.0	3.1	3.5	3.3	3.9	4.7	3.9	4.1	3.0	3.1	3.5	3.1	3.5	4.6	3.4
115.	4.4	3.0	4.1	4.8	4.4	3.0	3.0	3.5	3.3	4.0	4.6	3.8	4.2	3.0	3.0	3.5	3.1	3.5	4.6	3.4
120.	4.6	3.0	4.1	4.6	4.4	3.0	3.0	3.5	3.3	4.1	5.0	3.8	4.3	3.0	3.0	3.5	3.1	3.5	4.4	3.4
125.	4.6	3.0	4.2	4.6	4.4	3.0	3.0	3.5	3.3	4.3	5.0	3.8	4.3	3.0	3.0	3.5	3.1	3.5	4.4	3.4
130.	4.6	3.0	4.2	4.5	4.4	3.0	3.0	3.4	3.3	4.4	5.2	3.8	4.3	3.0	3.0	3.4	3.1	3.5	4.3	3.4
135.	4.7	3.0	4.2	4.9	4.5	3.0	3.0	3.4	3.3	4.7	5.2	3.8	4.4	3.0	3.0	3.4	3.1	3.5	4.3	3.4
140.	4.7	3.0	4.2	4.8	4.4	3.0	3.0	3.4	3.3	4.7	5.2	3.7	4.4	3.0	3.0	3.4	3.1	3.5	4.3	3.4
145.	4.8	3.0	4.4	5.1	4.5	3.0	3.0	3.4	3.3	4.5	5.2	3.8	4.5	3.0	3.0	3.4	3.1	3.6	4.2	3.4
150.	4.7	3.0	4.3	5.2	4.5	3.0	3.0	3.3	3.4	4.7	5.1	3.8	4.5	3.0	3.0	3.3	3.1	3.9	4.2	3.4
155.	4.7	3.2	4.5	5.2	4.5	3.2	3.0	3.3	3.4	4.9	5.2	3.8	4.5	3.2	3.0	3.3	3.1	4.0	4.2	3.4
160.	4.7	3.3	4.5	5.5	4.6	3.3	3.0	3.3	3.7	5.2	4.9	3.8	4.6	3.3	3.0	3.3	3.3	4.1	4.1	3.4
165.	4.7	3.5	4.9	5.7	4.6	3.5	3.1	3.4	3.9	5.4	4.9	3.8	4.6	3.5	3.0	3.3	3.5	4.4	4.1	3.4
170.	4.7	4.0	5.5	5.7	4.6	3.9	3.1	3.4	4.3	5.5	4.7	3.8	4.6	3.9	3.0	3.3	3.8	4.4	4.1	3.4
175.	4.4	4.5	5.9	5.5	4.4	4.5	3.4	3.7	4.8	5.3	4.5	3.5	4.4	4.5	3.1	3.4	4.2	4.4	3.9	3.2
180.	4.2	5.3	6.4	5.5	4.2	5.3	3.5	3.8	5.3	4.8	4.3	3.4	4.2	5.3	3.2	3.5	4.5	4.4	3.8	3.2
185.	3.7	5.7	6.7	5.0	3.7	5.6	3.8	4.1	5.4	4.3	4.0	3.2	3.6	5.6	3.3	3.7	4.8	4.1	3.7	3.1
190.	3.5	5.9	6.7	4.8	3.4	5.8	3.9	4.2	5.4	4.1	3.9	3.1	3.4	5.8	3.5	3.8	4.7	3.8	3.6	3.0
195.	3.2	5.9	6.4	4.4	3.2	5.8	4.1	4.4	5.2	3.6	3.8	3.0	3.2	5.8	3.5	3.8	4.6	3.5	3.5	3.0
200.	3.0	5.9	5.9	4.3	3.0	5.7	4.2	4.5	4.7	3.6	3.8	3.0	3.0	5.6	3.5	3.8	4.3	3.3	3.5	3.0
205.	3.0	5.7	5.4	4.3	3.0	5.5	4.1	4.7	4.7	3.5	3.8	3.0	3.0	5.5	3.6	3.9	4.2	3.3	3.5	3.0

1

JOB: Sunport I-25 Improvement Proj RUN: 3-4 AM Build Sunport Braodway

WIND ANGLE (DEGR)	CONCENTRATION (PPM) REC1	REC2	REC3	REC4	REC5	REC6	REC7	REC8	REC9	REC10	REC11	REC12	REC13	REC14	REC15	REC16	REC17	REC18	REC19	REC20
210.	3.0	5.6	5.1	4.3	3.0	5.3	4.1	4.7	4.7	3.5	3.8	3.0	3.0	5.3	3.6	3.9	4.0	3.3	3.5	3.0
215.	3.0	5.6	4.7	4.2	3.0	5.3	4.0	4.8	4.6	3.5	3.8	3.0	3.0	5.3	3.5	3.8	4.0	3.3	3.5	3.0
220.	3.0	5.5	4.7	4.3	3.0	5.3	4.0	4.7	4.6	3.4	3.9	3.0	3.0	5.2	3.5	3.9	4.0	3.3	3.6	3.0
225.	3.0	5.4	4.8	4.3	3.0	5.2	4.0	4.7	4.4	3.3	3.9	3.0	3.0	5.1	3.5	3.9	4.0	3.2	3.6	3.0
230.	3.0	5.3	4.4	4.3	3.0	5.1	4.0	4.8	4.2	3.3	3.9	3.0	3.0	5.0	3.4	3.9	3.8	3.2	3.6	3.0
235.	3.0	5.3	4.4	4.2	3.0	5.2	3.9	4.9	4.2	3.3	3.9	3.0	3.0	5.0	3.4	4.0	3.8	3.2	3.6	3.0
240.	3.0	5.3	4.7	4.1	3.0	5.2	3.9	4.8	4.0	3.3	3.8	3.0	3.0	5.0	3.4	3.9	3.8	3.2	3.6	3.0
245.	3.0	5.1	5.0	4.1	3.0	5.0	4.0	5.0	4.1	3.3	3.8	3.0	3.0	4.8	3.5	3.8	3.8	3.2	3.6	3.0
250.	3.0	5.1	5.1	4.1	3.0	5.1	3.9	4.8	3.9	3.2	3.9	3.0	3.0	4.8	3.5	4.2	3.8	3.2	3.7	3.0
255.	3.1	5.3	4.9	4.0	3.0	5.1	3.9	4.7	3.8	3.2	3.8	3.1	3.0	4.8	3.6	4.3	3.6	3.0	3.7	3.1
260.	3.2	5.4	5.0	4.0	3.0	5.1	4.1	4.6	3.7	3.2	3.8	3.1	3.0	4.8	3.6	4.2	3.6	3.0	3.7	3.1
265.	3.4	5.7	4.9	3.7	3.0	5.2	4.1	4.3	3.7	3.2	3.6	3.3	3.0	4.9	3.9	3.9	3.5	3.0	3.6	3.2
270.	3.5	5.8	4.7	3.6	3.0	5.3	4.4	4.0	3.5	3.0	3.5	3.4	3.0	4.9	4.0	3.8	3.5	3.0	3.5	3.3
275.	3.8	5.9	4.4	3.3	3.1	5.4	4.6	3.8	3.5	3.0	3.3	3.6	3.0	4.9	3.9	3.6	3.5	3.0	3.3	3.5
280.	4.0	5.9	4.4	3.2	3.2	5.4	4.6	3.6	3.6	3.0	3.2	3.7	3.0	4.8	4.5	3.2	3.6	3.0	3.1	3.5
285.	4.2	5.9	4.2	3.1	3.2	5.4	4.4	3.4	3.6	3.0	3.1	3.9	3.0	4.9	4.5	3.1	3.6	3.0	3.1	3.6
290.	4.4	5.4	4.1	3.1	3.3	5.4	4.6	3.4	3.6	3.0	3.0	3.9	3.1	4.9	4.0	3.1	3.6	3.0	3.0	3.6
295.	4.4	5.5	3.9	3.0	3.3	5.5	4.6	3.2	3.6	3.0	3.0	4.0	3.2	5.0	4.1	3.1	3.6	3.0	3.0	3.6
300.	4.6	4.9	3.9	3.0	3.3	5.8	4.6	3.2	3.6	3.0	3.0	4.0	3.2	5.1	3.9	3.1	3.6	3.0	3.0	3.6
305.	4.6	4.8	3.8	3.0	3.3	5.9	4.4	3.2	3.6	3.0	3.0	4.0	3.2	5.3	3.8	3.1	3.6	3.0	3.0	3.5
310.	4.5	4.9	3.7	3.0	3.4	5.9	4.5	3.2	3.6	3.0	3.0	3.9	3.2	5.3	3.7	3.1	3.6	3.0	3.0	3.5
315.	4.6	4.6	3.8	3.0	3.4	5.8	4.5	3.2	3.7	3.0	3.0	3.8	3.2	5.4	3.7	3.1	3.7	3.0	3.0	3.4
320.	4.6	4.7	3.8	3.0	3.4	5.9	4.5	3.2	3.7	3.0	3.0	3.8	3.3	5.6	3.7	3.1	3.7	3.0	3.0	3.4
325.	4.6	5.0	3.7	3.0	3.5	6.0	4.2	3.2	3.7	3.0	3.0	3.8	3.3	5.5	3.6	3.1	3.7	3.0	3.0	3.4
330.	4.6	4.8	3.9	3.0	3.6	6.0	4.2	3.3	3.9	3.0	3.0	3.8	3.2	5.6	3.6	3.1	3.9	3.0	3.0	3.4
335.	4.6	4.9	3.9	3.0	3.6	5.6	4.1	3.3	3.9	3.0	3.0	3.8	3.2	5.8	3.6	3.1	3.9	3.0	3.0	3.4
340.	4.5	5.1	4.0	3.0	3.6	5.2	4.0	3.3	3.9	3.0	3.0	3.7	3.2	5.8	3.6	3.1	3.9	3.0	3.0	3.4
345.	4.5	5.3	4.0	3.0	3.6	5.3	3.9	3.2	4.0	3.0	3.0	3.7	3.2	5.6	3.6	3.1	4.0	3.0	3.0	3.5
350.	4.7	5.3	4.0	3.2	3.7	5.0	3.9	3.2	4.0	3.2	3.0	3.8	3.5	5.5	3.6	3.1	3.9	3.2	3.0	3.5
355.	4.7	5.1	3.7	3.2	3.8	4.9	3.8	3.2	3.7	3.2	3.0	3.9	3.5	5.0	3.5	3.0	3.7	3.2	3.0	3.5
360.	4.8	5.0	3.6	3.3	4.0	4.4	3.6	3.1	3.6	3.3	3.1	4.0	3.8	4.6	3.5	3.0	3.6	3.3	3.0	3.6
MAX	5.2	5.9	6.7	5.7	5.0	6.0	4.6	5.0	5.4	5.5	5.2	5.0	4.6	5.8	4.5	4.3	4.8	4.4	4.6	4.5
DEGR.	10	275	190	165	40	325	275	245	185	170	130	65	25	190	280	255	185	165	110	80

THE HIGHEST CONCENTRATION IS 6.70 PPM AT 190 DEGREES FROM REC3 .

1

JOB: Sunport I-25 Improvement Proj RUN: 3-4 AM Build Sunport Braodway

RECEPTOR - LINK MATRIX FOR THE ANGLE PRODUCING
THE MAXIMUM CONCENTRATION FOR EACH RECEPTOR

CO/LINK (PPM)
ANGLE (DEGREES)

LINK #	REC1 10	REC2 275	REC3 190	REC4 165	REC5 40	REC6 325	REC7 275	REC8 245	REC9 185	REC10 170	REC11 130	REC12 65	REC13 25	REC14 190	REC15 280	REC16 255	REC17 185	REC18 165	REC19 110	REC20 80
1	0.2	0.3	0.0	0.2	0.0	0.1	0.2	0.1	0.0	0.1	0.2	0.2	0.0	0.0	0.1	0.1	0.0	0.0	0.2	0.2
2	0.0	0.1	0.2	0.0	0.2	0.0	0.3	0.1	0.1	0.0	0.0	0.1	0.1	0.0	0.5	0.2	0.1	0.1	0.1	0.2
3	0.1	0.1	0.0	0.1	0.0	0.0	0.1	0.0	0.0	0.0	0.1	0.0	0.0	0.0	0.0	0.0	0.0	0.0	0.1	0.0
4	0.0	0.0	0.1	0.0	0.0	0.0	0.0	0.1	0.0	0.0	0.0	0.1	0.0	0.0	0.1	0.2	0.0	0.0	0.0	0.1
5	0.1	0.1	0.0	0.2	0.0	0.1	0.1	0.1	0.0	0.1	0.3	0.1	0.0	0.0	0.1	0.1	0.0	0.0	0.3	0.1

6	*	0.0	0.0	0.0	0.0	0.0	0.0	0.0	0.0	0.0	0.0	0.0	0.0	0.0	0.0	0.0	0.0	0.0	0.0	0.0	0.0
7	*	0.0	0.6	0.6	0.4	0.3	0.7	0.2	0.1	0.4	0.4	0.2	0.1	0.3	0.9	0.1	0.1	0.2	0.2	0.1	0.1
8	*	0.3	0.0	0.3	0.0	0.1	0.0	0.0	0.1	0.4	0.0	0.0	0.1	0.1	0.0	0.1	0.1	0.5	0.2	0.0	0.1
9	*	0.0	0.1	0.1	0.1	0.1	0.1	0.0	0.0	0.1	0.1	0.0	0.0	0.1	0.1	0.0	0.0	0.0	0.0	0.0	0.0
10	*	0.1	0.0	0.0	0.0	0.0	0.0	0.0	0.0	0.0	0.1	0.0	0.0	0.0	0.0	0.0	0.0	0.0	0.1	0.0	0.0
11	*	0.1	0.1	0.1	0.2	0.2	0.1	0.0	0.0	0.1	0.1	0.1	0.0	0.2	0.1	0.0	0.0	0.1	0.0	0.0	0.0
12	*	0.1	0.0	0.0	0.0	0.0	0.0	0.0	0.0	0.0	0.0	0.0	0.0	0.0	0.0	0.0	0.0	0.0	0.0	0.0	0.0
13	*	0.2	0.1	0.0	0.2	0.0	0.1	0.1	0.1	0.0	0.1	0.3	0.2	0.0	0.0	0.0	0.0	0.0	0.0	0.1	0.1
14	*	0.2	0.2	0.0	0.1	0.0	0.1	0.1	0.1	0.0	0.1	0.3	0.3	0.0	0.0	0.1	0.1	0.0	0.0	0.3	0.3
15	*	0.4	0.1	0.0	0.1	0.0	0.1	0.1	0.1	0.0	0.0	0.2	0.3	0.0	0.0	0.0	0.0	0.0	0.0	0.1	0.1
16	*	0.0	0.0	0.3	0.0	0.1	0.0	0.1	0.2	0.1	0.0	0.0	0.1	0.0	0.0	0.1	0.1	0.0	0.0	0.0	0.0
17	*	0.0	0.0	0.2	0.0	0.1	0.0	0.0	0.3	0.1	0.0	0.0	0.1	0.0	0.0	0.1	0.1	0.0	0.0	0.0	0.0
18	*	0.0	0.0	0.4	0.0	0.1	0.0	0.0	0.4	0.1	0.0	0.0	0.1	0.0	0.0	0.0	0.1	0.0	0.0	0.0	0.0
19	*	0.0	0.2	0.2	0.2	0.3	0.3	0.1	0.0	0.1	0.1	0.1	0.0	0.2	0.0	0.0	0.0	0.1	0.1	0.1	0.0
20	*	0.0	0.9	1.2	0.9	0.5	1.2	0.2	0.1	0.9	0.8	0.4	0.0	0.6	1.7	0.1	0.1	0.6	0.5	0.2	0.1
21	*	0.1	0.0	0.0	0.0	0.0	0.0	0.0	0.0	0.0	0.1	0.0	0.1	0.0	0.0	0.0	0.0	0.1	0.1	0.0	0.0
22	*	0.3	0.0	0.0	0.0	0.0	0.1	0.0	0.1	0.0	0.4	0.0	0.1	0.0	0.0	0.1	0.0	0.1	0.1	0.0	0.1

RUN ENDED ON 12/17/11 AT 21:13

1 CAL3QHC (93157)
IBM-PC VERSION (2.01)

RUN NAME: 36.DAT □□□□□□□□□□□□□□□□□□□□

RUN BEGIN ON 12/17/11 AT 21:13

CAL3QHC: LINE SOURCE DISPERSION MODEL - VERSION 2.0, JANUARY 1992

JOB: Sunport I-25 Improvement Proj RUN: 3-6 PM Build Sunport Braodway

SITE & METEOROLOGICAL VARIABLES

VS = 0.0 CM/S VD = 0.0 CM/S Z0 = 175. CM
U = 1.0 M/S CLAS = 4 (D) ATIM = 60. MINUTES MIXH = 1000. M AMB = 3.0 PPM

LINK VARIABLES

LINK DESCRIPTION	LINK COORDINATES (FT) X1	Y1	X2	Y2	LENGTH (FT)	BRG (DEG)	TYPE	VPH	EF (G/MI)	H (FT)	W (FT)	V/C	QUEUE (VEH)
1. EB A	-1000.0	-14.0	0.0	-14.0	1000.	90.	AG	457.	13.4	0.0	44.0		
2. EB D	0.0	-14.0	1000.0	-14.0	1000.	90.	AG	820.	13.4	0.0	32.0		
3. EB L	-1000.0	-2.0	0.0	-2.0	1000.	90.	AG	75.	13.4	0.0	32.0		
4. WB A	1000.0	20.0	0.0	20.0	1000.	270.	AG	401.	13.4	0.0	44.0		
5. WB D	0.0	14.0	-1000.0	14.0	1000.	270.	AG	650.	13.4	0.0	32.0		
6. WB L	1000.0	2.0	0.0	2.0	1000.	270.	AG	474.	13.4	0.0	44.0		
7. NB A	20.0	-1000.0	20.0	0.0	1000.	360.	AG	644.	13.4	0.0	44.0		
8. NB D	20.0	0.0	20.0	1000.0	1000.	360.	AG	582.	13.4	0.0	44.0		
9. NB L	2.0	-1000.0	2.0	0.0	1000.	360.	AG	170.	13.4	0.0	32.0		
10. SB A	-20.0	1000.0	-20.0	0.0	1000.	180.	AG	936.	13.4	0.0	44.0		
11. SB D	-20.0	0.0	-20.0	-1000.0	1000.	180.	AG	1437.	13.4	0.0	44.0		
12. SB L	-2.0	1000.0	-2.0	0.0	1000.	180.	AG	332.	13.4	0.0	32.0		
13. EB L Q	-38.0	-2.0	-73.2	-2.0	35.	270.	AG	201.	100.0	0.0	12.0	0.65	1.8
14. EB T Q	-38.0	-14.0	-118.6	-14.0	81.	270.	AG	178.	100.0	0.0	12.0	0.68	4.1
15. EB R Q	-38.0	-26.0	-147.5	-26.0	109.	270.	AG	178.	100.0	0.0	12.0	0.81	5.6
16. WB L Q	38.0	2.0	792.6	2.0	755.	90.	AG	387.	100.0	0.0	24.0	1.32	38.3
17. WB T Q	38.0	20.0	129.7	20.0	92.	90.	AG	168.	100.0	0.0	12.0	0.66	4.7
18. WB R Q	38.0	32.0	88.8	32.0	51.	90.	AG	168.	100.0	0.0	12.0	0.37	2.6
19. NB L Q	2.0	-32.0	2.0	-147.2	115.	180.	AG	193.	100.0	0.0	12.0	0.95	5.9
20. NB T Q	20.0	-32.0	20.0	-139.4	107.	180.	AG	315.	100.0	0.0	24.0	0.68	5.5
21. SB L Q	-2.0	26.0	-2.0	166.8	141.	360.	AG	168.	100.0	0.0	12.0	0.85	7.2
22. SB T Q	-20.0	26.0	-20.0	156.5	131.	360.	AG	263.	100.0	0.0	24.0	0.68	6.6

1

JOB: Sunport I-25 Improvement Proj RUN: 3-6 PM Build Sunport Braodway

ADDITIONAL QUEUE LINK PARAMETERS

LINK DESCRIPTION	CYCLE LENGTH (SEC)	RED TIME (SEC)	CLEARANCE LOST TIME (SEC)	APPROACH VOL (VPH)	SATURATION FLOW RATE (VPH)	IDLE EM FAC (gm/hr)	SIGNAL TYPE	ARRIVAL RATE
13. EB L Q	90	78	4.5	75	1900	86.50	3	3
14. EB T Q	90	69	4.5	208	1900	86.50	3	3
15. EB R Q	90	69	4.5	249	1900	86.50	3	3
16. WB L Q	90	75	4.5	474	1900	86.50	3	3
17. WB T Q	90	65	4.5	258	1900	86.50	3	3
18. WB R Q	90	65	4.5	143	1900	86.50	3	3
19. NB L Q	90	75	4.5	170	1900	86.50	3	3
20. NB T Q	90	61	4.5	644	1900	86.50	3	3
21. SB L Q	90	65	4.5	332	1900	86.50	3	3
22. SB T Q	90	51	4.5	936	1900	86.50	3	3

RECEPTOR LOCATIONS

RECEPTOR	COORDINATES (FT) X	Y	Z
1. 1	-48.0	-48.0	5.0
2. 2	48.0	-42.0	5.0
3. 3	48.0	54.0	5.0
4. 4	-48.0	36.0	5.0
5. 5	-48.0	-128.0	5.0
6. 6	48.0	-122.0	5.0
7. 7	128.0	-42.0	5.0
8. 8	128.0	54.0	5.0
9. 9	48.0	134.0	5.0
10. 10	-48.0	116.0	5.0
11. 11	-128.0	36.0	5.0
12. 12	-128.0	-48.0	5.0
13. 13	-48.0	-248.0	5.0
14. 14	48.0	-242.0	5.0
15. 15	248.0	-42.0	5.0
16. 16	248.0	54.0	5.0
17. 17	48.0	254.0	5.0
18. 18	-48.0	236.0	5.0
19. 19	-248.0	36.0	5.0
20. 20	-248.0	-48.0	5.0

1

JOB: Sunport I-25 Improvement Proj RUN: 3-6 PM Build Sunport Braodway

MODEL RESULTS

REMARKS : In search of the angle corresponding to the maximum concentration, only the first angle, of the angles with same maximum concentrations, is indicated as maximum.

WIND ANGLE RANGE: 0.-360.

WIND * CONCENTRATION

ANGLE (DEGR)	REC1	REC2	REC3	REC4	REC5	REC6	REC7	REC8	REC9	REC10	REC11	REC12	REC13	REC14	REC15	REC16	REC17	REC18	REC19	REC20
	(PPM)																			
0.	5.5	5.2	3.6	3.9	4.7	4.8	4.7	3.1	3.6	3.7	3.1	4.0	4.3	4.2	4.4	3.0	3.5	3.7	3.0	3.4
5.	5.2	4.9	3.4	4.3	4.8	4.2	4.5	3.0	3.3	3.8	3.2	4.1	4.6	3.9	4.4	3.0	3.3	3.8	3.0	3.4
10.	5.6	4.8	3.2	4.5	4.8	4.2	4.5	3.0	3.2	4.0	3.3	4.2	4.8	3.7	4.4	3.0	3.1	3.9	3.1	3.5
15.	5.5	4.7	3.1	4.6	4.7	3.9	4.4	3.0	3.1	4.0	3.4	4.4	4.6	3.5	4.4	3.0	3.1	3.9	3.1	3.5
20.	5.3	4.6	3.1	4.8	4.8	3.8	4.4	3.0	3.1	4.1	3.4	4.5	4.6	3.3	4.4	3.0	3.0	3.9	3.1	3.5
25.	5.2	4.7	3.0	4.8	4.7	3.8	4.4	3.0	3.0	4.2	3.4	4.7	4.7	3.4	4.4	3.0	3.0	3.9	3.2	3.6
30.	4.9	4.7	3.0	4.8	5.0	3.8	4.4	3.0	3.0	4.3	3.5	4.8	4.7	3.4	4.4	3.0	3.0	3.8	3.2	3.6
35.	4.5	4.7	3.0	4.9	5.0	3.7	4.4	3.0	3.0	4.4	3.5	4.8	4.7	3.5	4.4	3.0	3.0	3.8	3.2	3.6
40.	4.8	4.6	3.0	4.9	5.0	3.7	4.4	3.0	3.0	4.4	3.6	4.9	4.7	3.5	4.4	3.0	3.0	3.8	3.2	3.7
45.	5.0	4.7	3.0	4.8	5.3	3.7	4.5	3.0	3.0	4.6	3.7	4.9	4.6	3.5	4.5	3.0	3.0	3.8	3.2	3.7
50.	4.7	4.7	3.0	4.6	5.4	3.8	4.6	3.0	3.0	4.4	3.7	4.8	4.5	3.5	4.6	3.0	3.0	3.6	3.2	3.7
55.	4.8	4.7	3.0	4.6	5.3	3.9	4.6	3.0	3.0	4.5	3.8	4.8	4.3	3.5	4.6	3.0	3.0	3.6	3.3	3.8
60.	5.1	4.7	3.0	4.6	5.4	3.9	4.6	3.0	3.0	4.5	3.7	5.0	4.3	3.5	4.6	3.0	3.0	3.6	3.3	4.0
65.	5.4	4.8	3.0	4.5	5.5	3.9	4.7	3.0	3.0	4.5	3.7	5.2	4.2	3.4	4.7	3.0	3.0	3.6	3.4	4.0
70.	5.5	4.8	3.0	4.7	5.3	3.9	4.8	3.0	3.0	4.5	3.8	5.1	4.1	3.3	4.8	3.0	3.0	3.6	3.4	4.0
75.	5.6	4.8	3.1	4.9	5.3	3.8	4.8	3.1	3.0	4.5	3.9	5.2	4.1	3.2	4.8	3.1	3.0	3.6	3.6	4.4
80.	5.7	4.7	3.3	5.2	5.1	3.6	4.6	3.3	3.0	4.5	4.3	5.1	3.9	3.1	4.6	3.3	3.0	3.6	3.8	4.3
85.	5.6	4.5	3.6	5.5	4.9	3.4	4.5	3.6	3.1	4.6	4.5	4.8	3.9	3.0	4.4	3.6	3.0	3.6	4.1	4.3
90.	5.4	4.1	3.9	6.0	4.5	3.2	4.1	3.9	3.1	4.8	4.8	4.7	3.8	3.0	4.0	3.7	3.0	3.6	4.3	4.2
95.	5.1	3.8	4.3	6.0	4.4	3.1	3.7	4.2	3.4	5.1	4.7	4.4	3.8	3.0	3.7	4.1	3.0	3.7	4.6	4.0
100.	4.8	3.5	4.6	6.2	4.2	3.0	3.5	4.4	3.6	5.2	4.8	4.0	3.8	3.0	3.4	4.3	3.1	3.7	4.6	3.8
105.	4.7	3.2	4.7	6.0	4.2	3.0	3.2	4.5	3.7	5.3	4.9	3.9	3.8	3.0	3.2	4.4	3.1	3.9	4.3	3.5
110.	4.5	3.1	4.9	5.6	4.0	3.0	3.0	4.5	3.7	5.4	4.8	3.6	3.8	3.0	3.0	4.5	3.3	4.0	4.3	3.5
115.	4.6	3.0	4.9	5.6	4.0	3.0	3.0	4.5	3.7	5.5	4.8	3.7	3.8	3.0	3.0	4.5	3.4	4.2	4.3	3.4
120.	4.6	3.0	5.1	5.1	3.9	3.0	3.0	4.4	3.7	5.5	4.7	3.7	3.8	3.0	3.0	4.4	3.5	4.2	4.2	3.3
125.	4.5	3.0	5.0	5.0	3.9	3.0	3.0	4.4	3.7	5.4	4.5	3.6	3.8	3.0	3.0	4.4	3.5	4.2	4.2	3.3
130.	4.6	3.0	5.0	4.9	3.9	3.0	3.0	4.4	3.7	5.4	4.6	3.6	3.9	3.0	3.0	4.4	3.5	4.2	4.0	3.3
135.	4.7	3.0	5.1	4.7	4.0	3.0	3.0	4.4	3.7	5.3	4.6	3.5	4.0	3.0	3.0	4.4	3.5	4.4	3.8	3.3
140.	4.6	3.0	4.9	4.8	4.0	3.0	3.0	4.2	3.8	5.4	4.5	3.4	4.0	3.0	3.0	4.2	3.5	4.5	3.7	3.3
145.	4.6	3.0	4.9	4.9	4.1	3.0	3.0	4.2	3.8	5.4	4.4	3.4	4.1	3.0	3.0	4.2	3.4	4.4	3.7	3.3
150.	4.5	3.0	4.9	5.0	4.1	3.0	3.0	4.2	3.8	5.3	4.4	3.4	4.1	3.0	3.0	4.2	3.3	4.5	3.7	3.3
155.	4.5	3.0	4.9	5.1	4.2	3.0	3.0	4.2	3.9	5.3	4.2	3.4	4.2	3.0	3.0	4.2	3.3	4.7	3.7	3.3
160.	4.4	3.1	4.7	5.3	4.2	3.1	3.0	4.1	3.9	5.4	4.2	3.4	4.2	3.1	3.0	4.1	3.3	4.7	3.7	3.3
165.	4.4	3.1	4.9	5.4	4.3	3.1	3.0	4.2	3.9	5.0	4.1	3.4	4.3	3.1	3.0	4.1	3.4	4.8	3.5	3.1
170.	4.3	3.4	5.0	5.2	4.3	3.3	3.0	4.2	4.2	4.9	4.1	3.4	4.3	3.3	3.0	4.1	3.7	4.8	3.5	3.1
175.	4.1	3.5	5.4	5.2	4.0	3.4	3.0	4.3	4.3	5.0	4.0	3.3	4.0	3.3	3.0	4.2	3.9	4.5	3.5	3.1
180.	3.8	3.8	5.6	5.0	3.8	3.5	3.2	4.6	4.7	4.6	3.8	3.1	3.8	3.5	3.0	4.2	4.1	4.3	3.4	3.0
185.	3.7	4.1	5.7	4.7	3.6	3.8	3.2	4.6	4.7	4.2	3.7	3.1	3.6	3.8	3.0	4.2	4.1	3.9	3.4	3.0
190.	3.4	4.5	5.7	4.4	3.4	3.9	3.3	4.6	4.8	3.9	3.5	3.0	3.4	3.9	3.1	4.2	4.3	3.6	3.4	3.0
195.	3.2	4.7	5.9	4.3	3.2	3.9	3.3	4.7	4.6	3.7	3.5	3.0	3.2	3.9	3.2	4.3	4.4	3.5	3.4	3.0
200.	3.1	4.9	5.3	4.2	3.1	4.0	3.3	4.8	4.3	3.5	3.5	3.0	3.1	3.9	3.2	4.3	4.2	3.2	3.4	3.0
205.	3.1	4.9	5.1	4.0	3.1	4.0	3.3	5.2	4.5	3.4	3.5	3.0	3.1	3.9	3.2	4.4	4.1	3.1	3.4	3.0

1

WIND ANGLE (DEGR)	REC1	REC2	REC3	REC4	REC5	REC6	REC7	REC8	REC9	REC10	REC11	REC12	REC13	REC14	REC15	REC16	REC17	REC18	REC19	REC20
	CONCENTRATION (PPM)																			
210.	3.0	5.0	4.7	4.0	3.0	4.0	3.3	5.1	4.6	3.4	3.4	3.0	3.0	3.9	3.3	4.5	4.1	3.1	3.4	3.0
215.	3.0	5.0	4.3	4.0	3.0	3.9	3.4	5.1	4.6	3.3	3.4	3.0	3.0	3.8	3.3	4.5	4.1	3.1	3.4	3.0
220.	3.0	5.0	4.6	3.9	3.0	4.0	3.4	5.1	4.6	3.3	3.4	3.0	3.0	3.8	3.3	4.6	4.0	3.1	3.4	3.0
225.	3.0	5.0	4.5	4.0	3.0	4.1	3.6	5.1	4.6	3.2	3.5	3.0	3.0	3.8	3.3	4.8	3.9	3.2	3.5	3.0
230.	3.0	5.0	4.5	4.0	3.0	4.2	3.6	5.1	4.6	3.2	3.5	3.0	3.0	3.8	3.2	4.7	3.8	3.2	3.5	3.0
235.	3.0	4.8	4.3	3.9	3.0	4.2	3.7	4.8	4.5	3.2	3.6	3.0	3.0	3.7	3.2	4.8	3.7	3.2	3.6	3.0
240.	3.0	4.8	4.5	3.8	3.0	4.3	3.7	5.1	4.3	3.2	3.6	3.0	3.0	3.7	3.3	4.8	3.6	3.2	3.6	3.0
245.	3.0	4.8	4.6	3.8	3.0	4.4	3.7	5.0	4.3	3.2	3.6	3.0	3.0	3.7	3.3	4.8	3.6	3.1	3.6	3.0
250.	3.0	4.8	4.6	3.7	3.0	4.5	3.7	4.8	4.3	3.2	3.6	3.0	3.0	3.7	3.4	4.4	3.6	3.1	3.6	3.0
255.	3.0	5.0	4.8	3.7	3.0	4.6	3.7	4.6	4.3	3.2	3.7	3.0	3.0	3.7	3.4	4.4	3.6	3.1	3.7	3.0
260.	3.2	5.0	4.4	3.7	3.0	4.6	4.0	4.4	4.3	3.2	3.7	3.1	3.0	3.7	3.6	4.3	3.5	3.0	3.6	3.1
265.	3.3	5.0	4.3	3.5	3.0	4.8	4.1	4.1	4.2	3.1	3.5	3.2	3.0	3.7	3.8	4.1	3.5	3.0	3.5	3.2
270.	3.4	5.1	4.4	3.5	3.0	4.8	4.1	4.0	4.1	3.1	3.4	3.3	3.0	3.7	4.2	4.0	3.5	3.0	3.4	3.3
275.	3.6	5.2	4.3	3.4	3.2	5.0	4.4	3.8	4.0	3.0	3.4	3.3	3.0	3.7	4.2	3.7	3.5	3.0	3.4	3.3
280.	3.9	5.3	4.2	3.2	3.2	5.0	4.4	3.6	4.0	3.0	3.2	3.5	3.0	3.7	4.6	3.5	3.5	3.0	3.2	3.4
285.	3.9	5.1	4.1	3.1	3.2	5.0	4.7	3.5	3.9	3.0	3.1	3.5	3.0	3.7	4.9	3.4	3.5	3.0	3.1	3.5
290.	4.1	5.0	4.1	3.1	3.2	5.1	4.6	3.5	3.9	3.0	3.1	3.5	3.1	3.9	5.0	3.4	3.5	3.0	3.1	3.5
295.	4.0	4.7	4.1	3.0	3.2	5.2	4.8	3.5	3.8	3.0	3.0	3.4	3.2	3.9	5.0	3.3	3.5	3.0	3.0	3.4
300.	4.1	4.7	4.1	3.0	3.2	5.2	5.0	3.5	3.7	3.0	3.0	3.5	3.2	3.9	5.1	3.2	3.5	3.0	3.0	3.4
305.	4.2	4.6	4.2	3.0	3.2	5.1	5.1	3.4	3.8	3.0	3.0	3.5	3.2	3.9	5.1	3.2	3.6	3.0	3.0	3.4
310.	4.2	4.5	4.2	3.0	3.3	5.2	5.2	3.5	3.7	3.0	3.0	3.6	3.2	4.0	4.9	3.2	3.6	3.0	3.0	3.4
315.	4.3	4.6	4.2	3.0	3.3	5.3	5.4	3.5	3.8	3.0	3.0	3.6	3.2	4.0	4.7	3.2	3.7	3.0	3.0	3.4
320.	4.2	4.8	4.2	3.0	3.3	5.5	5.4	3.4	3.7	3.0	3.0	3.6	3.2	4.2	4.6	3.2	3.7	3.0	3.0	3.4
325.	4.2	4.7	4.2	3.0	3.4	5.3	5.3	3.4	3.7	3.0	3.0	3.7	3.1	4.2	4.6	3.2	3.7	3.0	3.0	3.4
330.	4.2	4.9	4.1	3.0	3.4	5.0	5.3	3.4	3.7	3.0	3.0	3.7	3.1	4.3	4.6	3.2	3.7	3.0	3.0	3.4
335.	4.3	5.0	4.1	3.0	3.4	5.3	5.2	3.4	3.8	3.0	3.0	3.7	3.2	4.5	4.6	3.2	3.8	3.0	3.0	3.4
340.	4.3	5.1	4.0	3.1	3.6	5.1	5.1	3.4	3.8	3.1	3.0	3.7	3.3	4.4	4.5	3.2	3.8	3.1	3.0	3.3
345.	4.5	5.2	4.0	3.1	3.7	5.0	4.9	3.3	3.8	3.1	3.0	3.8	3.4	4.4	4.6	3.1	3.8	3.1	3.0	3.4
350.	4.7	5.1	3.9	3.3	3.9	4.9	4.8	3.2	3.8	3.2	3.0	3.8	3.6	4.6	4.4	3.0	3.8	3.2	3.0	3.4
355.	5.1	5.2	3.7	3.8	4.3	4.7	4.7	3.2	3.7	3.6	3.0	3.9	4.0	4.6	4.4	3.0	3.7	3.5	3.0	3.4
360.	5.5	5.2	3.6	3.9	4.7	4.8	4.7	3.1	3.6	3.7	3.1	4.0	4.3	4.2	4.4	3.0	3.5	3.7	3.0	3.4
MAX	5.7	5.3	5.9	6.2	5.5	5.5	5.4	5.2	4.8	5.5	4.9	5.2	4.8	4.6	5.1	4.8	4.4	4.8	4.6	4.4
DEGR.	80	280	195	100	65	320	315	205	190	115	105	65	10	350	300	225	195	165	95	75

THE HIGHEST CONCENTRATION IS 6.20 PPM AT 100 DEGREES FROM REC4 .

1

RECEPTOR - LINK MATRIX FOR THE ANGLE PRODUCING
THE MAXIMUM CONCENTRATION FOR EACH RECEPTOR

LINK #	REC1	REC2	REC3	REC4	REC5	REC6	REC7	REC8	REC9	REC10	REC11	REC12	REC13	REC14	REC15	REC16	REC17	REC18	REC19	REC20
	CO/LINK (PPM)																			
	ANGLE (DEGREES)																			
	80	280	195	100	65	320	315	205	190	115	105	65	10	350	300	225	195	165	95	75
1	0.0	0.2	0.0	0.0	0.0	0.1	0.0	0.0	0.0	0.0	0.1	0.2	0.0	0.0	0.0	0.0	0.0	0.0	0.1	0.2
2	0.3	0.1	0.2	0.3	0.2	0.0	0.4	0.2	0.1	0.1	0.2	0.1	0.0	0.0	0.4	0.2	0.0	0.0	0.1	0.1
3	0.0	0.0	0.0	0.0	0.0	0.0	0.0	0.0	0.0	0.0	0.0	0.0	0.0	0.0	0.0	0.0	0.0	0.0	0.0	0.0
4	0.1	0.0	0.1	0.2	0.1	0.0	0.1	0.2	0.1	0.1	0.1	0.1	0.0	0.0	0.1	0.2	0.0	0.0	0.1	0.1

5	*	0.0	0.2	0.0	0.2	0.0	0.1	0.0	0.0	0.0	0.0	0.3	0.1	0.0	0.0	0.0	0.0	0.0	0.0	0.3	0.1
6	*	0.2	0.0	0.1	0.2	0.1	0.0	0.2	0.1	0.1	0.1	0.1	0.1	0.0	0.0	0.2	0.2	0.0	0.0	0.1	0.1
7	*	0.1	0.3	0.3	0.0	0.2	0.3	0.0	0.1	0.2	0.0	0.0	0.0	0.1	0.3	0.0	0.1	0.1	0.1	0.0	0.0
8	*	0.0	0.0	0.2	0.1	0.0	0.0	0.1	0.0	0.2	0.1	0.0	0.1	0.1	0.1	0.1	0.0	0.3	0.1	0.0	0.0
9	*	0.0	0.0	0.1	0.0	0.0	0.1	0.0	0.0	0.0	0.0	0.0	0.0	0.0	0.0	0.0	0.0	0.0	0.0	0.0	0.0
10	*	0.0	0.0	0.0	0.4	0.0	0.1	0.1	0.0	0.0	0.4	0.1	0.1	0.1	0.2	0.1	0.0	0.2	0.5	0.1	0.1
11	*	0.6	0.3	0.5	0.0	0.6	0.3	0.0	0.3	0.4	0.0	0.1	0.1	0.8	0.2	0.0	0.2	0.2	0.2	0.1	0.1
12	*	0.0	0.0	0.0	0.1	0.0	0.0	0.1	0.0	0.0	0.1	0.0	0.0	0.1	0.1	0.0	0.0	0.1	0.1	0.0	0.0
13	*	0.0	0.1	0.0	0.0	0.0	0.0	0.0	0.0	0.0	0.0	0.1	0.1	0.0	0.0	0.0	0.0	0.0	0.0	0.0	0.0
14	*	0.0	0.1	0.0	0.0	0.0	0.1	0.0	0.0	0.0	0.0	0.1	0.3	0.0	0.0	0.0	0.0	0.0	0.0	0.1	0.1
15	*	0.0	0.2	0.0	0.0	0.0	0.1	0.0	0.0	0.0	0.0	0.0	0.4	0.0	0.0	0.0	0.0	0.0	0.0	0.1	0.1
16	*	0.8	0.0	0.3	0.9	0.5	0.0	0.8	0.7	0.1	0.5	0.4	0.3	0.1	0.1	0.9	0.8	0.0	0.1	0.4	0.3
17	*	0.1	0.0	0.2	0.1	0.0	0.0	0.2	0.3	0.1	0.1	0.1	0.1	0.0	0.0	0.1	0.0	0.0	0.0	0.0	0.0
18	*	0.0	0.0	0.3	0.1	0.0	0.0	0.1	0.0	0.1	0.1	0.0	0.0	0.0	0.0	0.0	0.0	0.0	0.0	0.0	0.0
19	*	0.2	0.2	0.2	0.0	0.3	0.3	0.0	0.1	0.1	0.0	0.0	0.0	0.1	0.1	0.0	0.0	0.0	0.0	0.0	0.0
20	*	0.3	0.6	0.4	0.0	0.5	0.9	0.0	0.2	0.2	0.0	0.1	0.0	0.2	0.3	0.0	0.1	0.1	0.1	0.0	0.0
21	*	0.0	0.0	0.0	0.1	0.0	0.0	0.1	0.0	0.1	0.2	0.0	0.0	0.1	0.1	0.1	0.0	0.2	0.2	0.0	0.0
22	*	0.0	0.0	0.0	0.5	0.0	0.1	0.2	0.0	0.0	0.7	0.1	0.1	0.1	0.1	0.1	0.0	0.2	0.4	0.1	0.1

RUN ENDED ON 12/17/11 AT 21:14

Attachment 1:
Mobile 6.2 Input and Output Files

```
                    MOBILE6.2.01 (31-Oct-2002)                    *
* Input file: 2010.IN (file 1, run 1).                    *
*****************************************************************************
 M616 Comment:
          User has supplied post-1999 sulfur levels.

* Reading I/M program description records from the following external
* data file: C:\MOBILE6\RUN\BASE2002.D

* # # # # # # # # # # # # # # # # # # # # # # # # #
* scenario title : baseline 1 IDLE
* File 1, Run 1, Scenario 1.
* # # # # # # # # # # # # # # # # # # # # # # # # #
 M583 Warning:
        The user supplied arterial average speed of  2.5
        will be used for all hours of the day.  100% of VMT
        has been assigned to the arterial/collector roadway
        type for all hours of the day and all vehicle types.
*** I/M credits for Tech1&2 vehicles were read from the following external
   data file: TECH12.D
 M 48 Warning:
          there are no sales for vehicle class HDGV8b

             Calendar Year:  2010
                   Month:  Jan.
                 Altitude:  High
          Minimum Temperature:  32.2 (F)
          Maximum Temperature:  50.7 (F)
           Absolute Humidity:   75. grains/lb
            Nominal Fuel RVP:   9.0 psi
               Weathered RVP:   9.0 psi
          Fuel Sulfur Content:   30. ppm

          Exhaust I/M Program:  Yes
            Evap I/M Program:  No
                ATP Program:  Yes
            Reformulated Gas:  No

  Ether Blend Market Share: 0.000      Alcohol Blend Market Share: 1.000
  Ether Blend Oxygen Content: 0.000    Alcohol Blend Oxygen Content: 0.027
                          Alcohol Blend RVP Waiver: No

     Vehicle Type:     LDGV    LDGT12    LDGT34     LDGT     HDGV     LDDV     LDDT     HDDV
MC   All Veh
          GVWR:            <6000    >6000    (All)
                  ------   ------   ------   ------   ------   ------   ------   ------   ------   ------
  VMT Distribution:   0.3540   0.3855   0.1315          0.0357   0.0003   0.0019   0.0856   0.0054   1.0000
 ---------------------------------------------------------------------------------------------------------
 Composite Emission Factors (g/mi):
    Composite CO  :    34.85    37.00    48.23    39.85   121.78    3.381    2.880   20.421    86.81   39.513
 ---------------------------------------------------------------------------------------------------------

* # # # # # # # # # # # # # # # # # # # # # # # # #
* scenario title : baseline 2 at speed
* File 1, Run 1, Scenario 2.
```

```
* ##########################
 M583 Warning:
        The user supplied arterial average speed of 25.0
        will be used for all hours of the day.  100% of VMT
        has been assigned to the arterial/collector roadway
        type for all hours of the day and all vehicle types.
 M 48 Warning:
         there are no sales for vehicle class HDGV8b

             Calendar Year:  2010
                   Month:  Jan.
                Altitude:  High
         Minimum Temperature:  32.2 (F)
         Maximum Temperature:  50.7 (F)
           Absolute Humidity:   75. grains/lb
          Nominal Fuel RVP:   9.0 psi
             Weathered RVP:   9.0 psi
         Fuel Sulfur Content:   30. ppm

         Exhaust I/M Program:  Yes
           Evap I/M Program:  No
              ATP Program:  Yes
           Reformulated Gas:  No

  Ether Blend Market Share: 0.000      Alcohol Blend Market Share: 1.000
  Ether Blend Oxygen Content: 0.000    Alcohol Blend Oxygen Content: 0.027
                              Alcohol Blend RVP Waiver: No

     Vehicle Type:     LDGV    LDGT12    LDGT34     LDGT     HDGV     LDDV     LDDT     HDDV
MC   All Veh
          GVWR:            <6000    >6000    (All)
                  ------   ------   ------   ------   ------   ------   ------   ------   ------   ------
  VMT Distribution:   0.3540   0.3855   0.1315          0.0357   0.0003   0.0019   0.0856   0.0054   1.0000
 ---------------------------------------------------------------------------------------------------------------
 Composite Emission Factors (g/mi):
   Composite CO  :    13.74    15.42    19.28    16.40    26.52    1.130    0.994    4.951    23.45   14.843
 ---------------------------------------------------------------------------------------------------------------

* ##########################
* scenario title : baseline 2 at speed
* File 1, Run 1, Scenario 3.
* ##########################
 M583 Warning:
        The user supplied arterial average speed of 35.0
        will be used for all hours of the day.  100% of VMT
        has been assigned to the arterial/collector roadway
        type for all hours of the day and all vehicle types.
 M 48 Warning:
         there are no sales for vehicle class HDGV8b

             Calendar Year:  2010
                   Month:  Jan.
                Altitude:  High
         Minimum Temperature:  32.2 (F)
         Maximum Temperature:  50.7 (F)
```

```
          Absolute Humidity:   75. grains/lb
           Nominal Fuel RVP:   9.0 psi
             Weathered RVP:   9.0 psi
         Fuel Sulfur Content:   30. ppm

         Exhaust I/M Program:  Yes
           Evap I/M Program:  No
               ATP Program:  Yes
           Reformulated Gas:  No

  Ether Blend Market Share: 0.000      Alcohol Blend Market Share: 1.000
  Ether Blend Oxygen Content: 0.000    Alcohol Blend Oxygen Content: 0.027
                              Alcohol Blend RVP Waiver: No

     Vehicle Type:     LDGV    LDGT12    LDGT34     LDGT     HDGV     LDDV     LDDT     HDDV
MC   All Veh
          GVWR:            <6000    >6000    (All)
                 ------   ------   ------   ------   ------   ------   ------   ------   ------   ------
  VMT Distribution:   0.3540   0.3855   0.1315          0.0357   0.0003   0.0019   0.0856   0.0054   1.0000
 ---------------------------------------------------------------------------------------------------------------
 Composite Emission Factors (g/mi):
   Composite CO  :    13.66    15.34    19.13    16.30    19.26    0.925    0.823    3.545    19.16   14.360
 ---------------------------------------------------------------------------------------------------------------

* ##########################
* scenario title : baseline 2 at speed
* File 1, Run 1, Scenario 4.
* ##########################
 M583 Warning:
        The user supplied arterial average speed of 40.0
        will be used for all hours of the day.  100% of VMT
        has been assigned to the arterial/collector roadway
        type for all hours of the day and all vehicle types.
 M 48 Warning:
         there are no sales for vehicle class HDGV8b

             Calendar Year:  2010
                   Month:  Jan.
                Altitude:  High
         Minimum Temperature:  32.2 (F)
         Maximum Temperature:  50.7 (F)
          Absolute Humidity:   75. grains/lb
           Nominal Fuel RVP:   9.0 psi
             Weathered RVP:   9.0 psi
         Fuel Sulfur Content:   30. ppm

         Exhaust I/M Program:  Yes
           Evap I/M Program:  No
               ATP Program:  Yes
           Reformulated Gas:  No

  Ether Blend Market Share: 0.000      Alcohol Blend Market Share: 1.000
  Ether Blend Oxygen Content: 0.000    Alcohol Blend Oxygen Content: 0.027
                              Alcohol Blend RVP Waiver: No
```

```
    Vehicle Type:     LDGV    LDGT12    LDGT34     LDGT     HDGV     LDDV     LDDT     HDDV
MC   All Veh
          GVWR:            <6000    >6000     (All)
                  ------   ------   ------   ------   ------   ------   ------   ------   ------   ------
  VMT Distribution:   0.3540   0.3855   0.1315          0.0357   0.0003   0.0019   0.0856   0.0054   1.0000
 ---------------------------------------------------------------------------------------------------------------
 Composite Emission Factors (g/mi):
   Composite CO  :    14.13    15.86    19.74    16.84    17.82    0.877    0.782    3.212    17.94   14.721
 ---------------------------------------------------------------------------------------------------------------

* # # # # # # # # # # # # # # # # # # # # # # # # #
* scenario title : baseline 2 at speed
* File 1, Run 1, Scenario 5.
* # # # # # # # # # # # # # # # # # # # # # # # # #
 M583 Warning:
        The user supplied arterial average speed of 45.0
        will be used for all hours of the day.  100% of VMT
        has been assigned to the arterial/collector roadway
        type for all hours of the day and all vehicle types.
 M 48 Warning:
         there are no sales for vehicle class HDGV8b

             Calendar Year:  2010
                   Month:  Jan.
                Altitude:  High
         Minimum Temperature:  32.2 (F)
         Maximum Temperature:  50.7 (F)
           Absolute Humidity:   75. grains/lb
            Nominal Fuel RVP:   9.0 psi
              Weathered RVP:   9.0 psi
         Fuel Sulfur Content:   30. ppm

         Exhaust I/M Program:  Yes
           Evap I/M Program:  No
               ATP Program:  Yes
           Reformulated Gas:  No

  Ether Blend Market Share: 0.000      Alcohol Blend Market Share: 1.000
  Ether Blend Oxygen Content: 0.000    Alcohol Blend Oxygen Content: 0.027
                              Alcohol Blend RVP Waiver: No

    Vehicle Type:     LDGV    LDGT12    LDGT34     LDGT     HDGV     LDDV     LDDT     HDDV
MC   All Veh
          GVWR:            <6000    >6000     (All)
                  ------   ------   ------   ------   ------   ------   ------   ------   ------   ------
  VMT Distribution:   0.3540   0.3855   0.1315          0.0357   0.0003   0.0019   0.0856   0.0054   1.0000
 ---------------------------------------------------------------------------------------------------------------
 Composite Emission Factors (g/mi):
   Composite CO  :    14.61    16.37    20.34    17.38    17.42    0.852    0.762    3.045    17.49   15.139
 ---------------------------------------------------------------------------------------------------------------
```