LEVEL 'B' PLANNED COMMUNITY SUPPLEMENTAL TECHNICAL REPORT

FOR

2016 SANTOLINA LEVEL 'B' MASTER PLAN

ON-SITE AND OFF-SITE LOCATIONS OF INTEREST TRAFFIC ANALYSIS

MARCH 31, 2016

Prepared For:

Western Albuquerque Land Holdings, LLC
P.O. Box 56790
Albuquerque, NM 87187

Prepared By:

Bohannan Huston

Engineering
Spatial Data
Advanced Technologies

LEVEL 'B' PLANNED COMMUNITY

SUPPLEMENTAL TECHNICAL REPORT

FOR

2016 SANTOLINA LEVEL 'B' MASTER PLAN

ON-SITE AND OFF-SITE LOCATIONS OF INTEREST TRAFFIC ANALYSIS

COUNTY OF BERNALILLO, NEW MEXICO

MARCH 31, 2016

PREPARED FOR:

WESTERN ALBUQUERQUE LAND HOLDINGS (WALH)

Prepared by:

BOHANNAN HUSTON, INC.

COURTYARD I

7500 JEFFERSON STREET NE

ALBUQUERQUE, NM 87109

Prepared by:

Eric J. Wrage 3/31/16

Eric J. Wrage, P.E./PTOE Date

Bohannan Huston

TABLE OF CONTENTS

I. INTRODUCTION AND SUMMARY 1
A. Introduction 1
1. Study Locations 1
B. Summary 2
1. Off-Site Locations 2
2. On-Site Locations 3
II. ANALYSIS METHOD 7
A. Forecast Traffic Volumes 7
B. Comparison with MRCOG MTP 8
C. Development of Turning Movements 11
D. Location Analysis Procedures 11
E. Estimation of Probable Construction Cost Procedures 12
III. OFF-SITE ANALYSIS 14
A. Off-Site Improvements by 2025 14
1. Atrisco Vista and Westbound I-40 Ramp 14
2. Atrisco Vista and Eastbound I-40 Ramp 15
B. Off-Site Improvements by 2040 18
1. I-40 and Future 118th Street Interchange Westbound Ramps 19
2. I-40 and Future 118th Street Interchange Eastbound Ramps 21
3. Future 118th Street and Central Avenue 21
4. Future 118th Street and Future Gibson 23
5. Future 118th Street and Dennis Chavez 24
6. Future 118th Street and Future Gun Club 26
7. Central and 98th Street 29
8. Central and 106th Street 30
9. Dennis Chavez and Unser 33
10. Dennis Chavez/Rio Bravo and Coors 34
11. Rio Bravo and Isleta 35
12. Rio Bravo and Broadway 37
13. Gun Club and Future Unser 38
14. Gun Club and Coors 39
15. Gun Club and Isleta 40

16. Atrisco Vista and Westbound I-40 Ramp 43
17. Atrisco Vista and Eastbound I-40 Ramp 44
18. Atrisco Vista and Central Avenue 45
19. Future Paseo del Volcan and Westbound I-40 Ramp 46
20. Future Paseo del Volcan and Eastbound I-40 Ramp 47
21. Westbound I-40 Between Unser Boulevard and 98th Street/Arroyo Vista Interchanges 48
22. Eastbound I-40 Between Future 118th Street and Unser Boulevard Interchanges 49

IV. ON-SITE ANALYSIS 50

A. On-Site Improvements by 2025 50
1. 2025 On-Site Roadway Cost Summary 50

B. On-Site Improvements by 2040 50
1. Future Paseo del Volcan and I-40 Frontage Road 51
2. Atrisco Vista and Parallel Road 52
3. Atrisco Vista and Future Gibson 53
4. Dennis Chavez and Loop Road 53
5. 2040 On-Site Roadway Cost Summary 54

V. SUMMARY 56

A. Off-Site Locations 56
1. 2025 Off-Site Summary 56
2. 2040 Off-Site Summary 56

B. On-Site Locations 57
1. 2025 On-Site Summary 57
2. 2040 On-Site Summary 57

TABLES

TABLE 1 – LOS DEFINITIONS 12
TABLE 2 – 2025 SIGNALIZED RESULTS – ATRISCO VISTA AND WB I-40 RAMP.....14
TABLE 3 – 2025 LANEAGE – ATRISCO VISTA AND WB I-40 RAMP 15
TABLE 4 – 2025 SIGNALIZED RESULTS – ATRISCO VISTA AND EB I-40 RAMP.....15
TABLE 5 – 2025 LANEAGE – ATRISCO VISTA AND EB I-40 RAMP 16
TABLE 6 – 2040 SIGNALIZED RESULTS – FUTURE 118TH STREET AND WB I-40 RAMP 20
TABLE 7 – 2040 LANEAGE – FUTURE 118TH STREET AND WB I-40 RAMP 20
TABLE 8 – 2040 SIGNALIZED RESULTS – FUTURE 118TH STREET AND EB I-40 RAMP 21
TABLE 9 – 2040 LANEAGE – FUTURE 118TH STREET AND EB I-40 RAMP 21
TABLE 10 – 2040 SIGNALIZED RESULTS – FUTURE 118TH STREET AND CENTRAL AVENUE 22
TABLE 11 – 2040 LANEAGE – FUTURE 118TH STREET AND CENTRAL AVENUE 22
TABLE 12 – 2040 SIGNALIZED RESULTS – FUTURE 118TH STREET AND FUTURE GIBSON EXTENSION.....23
TABLE 13 – 2040 LANEAGE – FUTURE 118TH STREET AND FUTURE GIBSON EXTENSION 24
TABLE 14 – 2040 SIGNALIZED RESULTS – 118TH STREET AND DENNIS CHAVEZ 25
TABLE 15 – 2040 LANEAGE – 118TH STREET AND DENNIS CHAVEZ 26
TABLE 16 – 2040 SIGNALIZED RESULTS – FUTURE 118TH STREET AND FUTURE GUN CLUB 27
TABLE 17 – 2040 LANEAGE – FUTURE 118TH STREET AND FUTURE GUN CLUB 27
TABLE 18 – 2040 SIGNALIZED RESULTS – CENTRAL AND 98TH STREET 29
TABLE 19 – 2040 LANEAGE – CENTRAL AND 98TH STREET.....30
TABLE 20 – 2040 SIGNALIZED RESULTS – CENTRAL AND 106TH STREET 30
TABLE 21 – 2040 LANEAGE – CENTRAL AND 106TH STREET.....31
TABLE 22 – 2040 SIGNALIZED RESULTS – DENNIS CHAVEZ AND UNSER 33
TABLE 23 – 2040 LANEAGE – DENNIS CHAVEZ AND UNSER.....33
TABLE 24 – 2040 SIGNALIZED RESULTS – DENNIS CHAVEZ/RIO BRAVO AND COORS 34
TABLE 25 – 2040 LANEAGE – DENNIS CHAVEZ/RIO BRAVO AND COORS.....35

TABLE 26 – 2040 SIGNALIZED RESULTS – RIO BRAVO AND ISLETA.....36
TABLE 27 – 2040 LANEAGE – RIO BRAVO AND ISLETA 36
TABLE 28 – 2040 SIGNALIZED RESULTS – RIO BRAVO AND BROADWAY 37
TABLE 29 – 2040 LANEAGE – RIO BRAVO AND BROADWAY.....38
TABLE 30 – 2040 SIGNALIZED RESULTS – GUN CLUB AND FUTURE UNSER 39
TABLE 31 – 2040 LANEAGE – GUN CLUB AND FUTURE UNSER 39
TABLE 32 – 2040 SIGNALIZED RESULTS – GUN CLUB AND COORS 40
TABLE 33 – 2040 LANEAGE – GUN CLUB AND COORS.....40
TABLE 34 – 2040 SIGNALIZED RESULTS – GUN CLUB AND ISLETA.....41
TABLE 35 – 2040 LANEAGE – GUN CLUB AND ISLETA 41
TABLE 36 – 2040 SIGNALIZED RESULTS – ATRISCO VISTA AND WB I-40 RAMP.....43
TABLE 37 – 2040 LANEAGE – ATRISCO VISTA AND WB I-40 RAMP 43
TABLE 38 – 2040 SIGNALIZED RESULTS – ATRISCO VISTA AND EB I-40 RAMP.....44
TABLE 39 – 2040 LANEAGE – ATRISCO VISTA AND EB I-40 RAMP 44
TABLE 40 – 2040 SIGNALIZED RESULTS – ATRISCO VISTA AND CENTRAL 45
TABLE 41 – 2040 LANEAGE – ATRISCO VISTA AND CENTRAL.....46
TABLE 42 – 2040 SIGNALIZED RESULTS – FUTURE PASEO DEL VOLCAN AND WB I-40 RAMP 47
TABLE 43 – 2040 LANEAGE – FUTURE PASEO DEL VOLCAN AND WB I-40 RAMP 47
TABLE 44– 2040 SIGNALIZED RESULTS FUTURE PASEO DEL VOLCAN AND EB I-40 RAMP 48
TABLE 45 – 2040 LANEAGE – FUTURE PASEO DEL VOLCAN AND EB I-40 RAMP 48
TABLE 46 – 2040 SIGNALIZED RESULTS FUTURE PASEO DEL VOLCAN AND I-40 FRONTAGE ROAD 51
TABLE 47 – 2040 LANEAGE – FUTURE PASEO DEL VOLCAN AND I-40 FRONTAGE ROAD 52
TABLE 48 – 2040 SIGNALIZED RESULTS ATRISCO VISTA AND PARALLEL ROAD 52
TABLE 49 – 2040 LANEAGE – ATRISCO VISTA AND PARALLEL ROAD 53
TABLE 50 – 2040 SIGNALIZED RESULTS ATRISCO VISTA AND FUTURE GIBSON 53
TABLE 51 – 2040 LANEAGE – ATRISCO VISTA AND FUTURE GIBSON 53
TABLE 52 – 2040 SIGNALIZED RESULTS DENNIS CHAVEZ AND LOOP ROAD.....54
TABLE 53 – 2040 LANEAGE – DENNIS CHAVEZ AND LOOP ROAD 54

FIGURES

FIGURE 1 – MRCOG LONG RANGE TRANSPORTATION SYSTEM 5
FIGURE 2 – STUDY LOCATIONS 6
FIGURE 3 – 2040 AM PEAK HOUR COMPARISON – SANTOLINA SCENARIO COMPARED TO MRCOG TREND SCENARIO 10
FIGURE 4 – 2025 ATRISCO VISTA AND I-40 IMPROVEMENTS.....17
FIGURE 5 – 118TH STREET IMPROVEMENTS 28
FIGURE 6 – CENTRAL AVENUE – 106TH STREET AND 98TH STREET INTERSECTION IMPROVEMENT 32
FIGURE 7 – DENNIS CHAVEZ/RIO BRAVO AND GUN CLUB INTERSECTION IMPROVEMENT 42
FIGURE 8 – ON-SITE, PASEO DEL VOLCAN AND ATRISCO VISTA INTERSECTION IMPROVEMENT 55

APPENDICES

APPENDIX A 2016 LEVEL B SANTOLINA TRANSPORTATION MASTER PLAN TECHNICAL APPENDIX EXCERPTS
APPENDIX B TURNING MOVEMENT DEVELOPMENT SPREADSHEETS
APPENDIX C INTERSECTION CAPACITY ANALYSIS SUMMARIES
APPENDIX D CONCEPTUAL ENGINEER OPINIONS OF PROBABLE CONSTRUCTION COST

I. INTRODUCTION AND SUMMARY

A. INTRODUCTION

The 2016 Level B Santolina Transportation Master Plan identified locations where the expected horizon year 2025 and 2040 traffic performance had decreased under the Santolina development scenario as compared to the Mid-Region Council of Governments (MRCOG) 2025 and 2040 Trend Scenario. This document will identify those locations where traffic operations decreased, and determine the necessary mitigation improvements to achieve acceptable traffic operations, as requested by Bernalillo County Transportation Staff during their review of the 2016 Level B Santolina Transportation Master Plan. The basis for the future roadway network is the MRCOG Long Range Transportation System map. This is shown in Figure 1. Appendix A: Project Listing, from the 2040 MTP also was used to identify the roadways anticipated to be constructed, as well as the anticipated number of lanes to constructed.

1. STUDY LOCATIONS

The locations identified for additional analysis are listed below. A map showing the locations is shown in Figure 2.

2025

- I-40 and Atrisco Vista Interchange Ramps

2040

- I-40 and Atrisco Vista Interchange Ramps
- I-40 and Future Paseo del Volcan Ramps
- I-40 and Future 118th Street Interchange Ramps
- Future 118th Street between Central and I-40
- Future 118th Street and Future Gibson
- Future 118th Street and Dennis Chavez
- Future 118th Street and Future Gun Club
- Central and 98th Street
- Central and Future 106th Street
- Dennis Chavez and Unser Boulevard
- Rio Bravo/Dennis Chavez and Coors
- Rio Bravo and Isleta Boulevard

- Rio Bravo and Broadway
- Future Gun Club and Future Unser Boulevard
- Gun Club and Coors
- Gun Club and Isleta Boulevard

The approaches to the above intersections will also be evaluated with respect to the laneage anticipated in 2025 and 2040 per the MRCOG Metropolitan Transportation Plan (MTP).

In addition, the following locations on I-40 will be considered:

- I-40 Westbound between Unser Boulevard and 98th Street interchanges
- I-40 Eastbound between Future 118th Street and Unser Boulevard interchanges

B. SUMMARY

The 2016 Level B Santolina Transportation Master Plan identified locations where the forecast traffic operations under the Santolina scenario are anticipated to be more congested than under the MRCOG Trend scenario. These locations were evaluated to determine the improvements required to achieve acceptable levels of service at the identified locations. The configuration of the roadways prior to the improvements were assumed to be that in the 2040 MTP Appendix A Project Listing, or the existing geometry, if the locations were not identified for improvement in the 2040 MTP.

The locations were evaluated for 2025 and 2040, as identified in the 2016 Level B Santolina Transportation Master Plan.

1. OFF-SITE LOCATIONS

a) *2025 Off-Site Summary*

The 2016 Level B Santolina Transportation Master Plan analysis found that in 2025, the only off-site location that required improvement was the Atrisco Vista ramps with I-40. The recent reconstruction of the interchange constructed sufficient infrastructure to accommodate the expected traffic, although minor, striping modifications are required. Due to the minor nature of the required improvements, the improvements can be considered during the normal development process, and funding through the MTP or TIP is not necessary. The improvements required for this location is identified in Section III.A, Off-Site Improvements by 2025, beginning on page 14.

b) *2040 Off-Site Summary*

The analysis identified 22 locations where the changes in traffic volumes resulted in a change in congestion where improvements were requested to be evaluated. These locations are spread throughout the area, generally from Coors Boulevard west to Atrisco Vista, and from Gun Club on the south, to Interstate 40 on the north. These locations are considered to system infrastructure, as the roadways serve both Santolina and regional traffic. Therefore, the costs of these improvements are anticipated to be shared between Santolina and public funding, per the Level A and Level B Development Agreement.

The total estimated cost for the construction of the anticipated improvements is $64.651 million, with both private and public funding to be used for construction. The improvements required for each location is identified in Section III.B, Off-Site Improvements by 2040, beginning on page 18.

2. ON-SITE LOCATIONS

a) *2025 On-Site Summary*

The traffic analysis performed for the 2016 Level B Santolina Transportation Master Plan found that the assumed infrastructure within the boundaries of the Master Plan area was adequate to accommodate the expected traffic volume. Therefore, individual intersection geometry within the Master Plan boundaries was not evaluated at this time, and the costs of the on-site infrastructure was estimated based on a per-mile estimate of the anticipated roadway typical section (number of lanes, sidewalk, bike lanes, signalization, etc.) as identified in the 2016 Level B Santolina Transportation Master Plan.

The total cost estimated for the 2025 roadway network is summarized below:

- Atrisco Vista widening $14.342 million
- Dennis Chavez widening $10.472 million
- Internal roadways $73.845 million
- Total 2025 Santolina roadways (similar to 2040 MTP MPO Project #719.0) includes all of the above $98.659 million

As with the above off-site infrastructure, a portion of the above improvements will also benefit regional traffic and will be considered system infrastructure per the terms of the Development Agreement.

A summary of the improvements and methodology used to determine the costs is included in Section IV.A, On-Site Improvements by 2025, beginning on page 50.

A summary of the improvements and methodology used to determine the costs is included in Section IV.A, On-Site Improvements by 2025, beginning on page 50.

b) *2040 On-Site Summary*

Similar to the 2025 analysis, on-site infrastructure required and the construction costs for 2040 was also determined. The total cost estimated for the 2040 roadway network is summarized below:

- Atrisco Vista widening $28.4 million
- Dennis Chavez widening $5.5 million
- Gibson Extension – up escarpment to Loop Rd $9.22 million
- Gibson Extension – Loop Road to Atrisco Vista $2.65 million
- Gibson Extension –west of Atrisco Vista $5.73 million
- Internal roadways $26.6 million
- Total 2040 Santolina roadways (similar to 2040 MTP MPO Project #719.1) includes all of the above $78.1 million
- Paseo del Volcan south of I-40 (similar to 2040 MTP MPO Project #719.3) $8.1 million
- Total 2040 including Paseo del Volcan $86.2 million

As with the above off-site infrastructure, a portion of the above improvements will also benefit regional traffic and will be considered system infrastructure per the terms of the Development Agreement. A summary of the improvements and methodology used to determine the costs is shown in Section IV.B, On-Site Improvements by 2040, beginning on page 50.

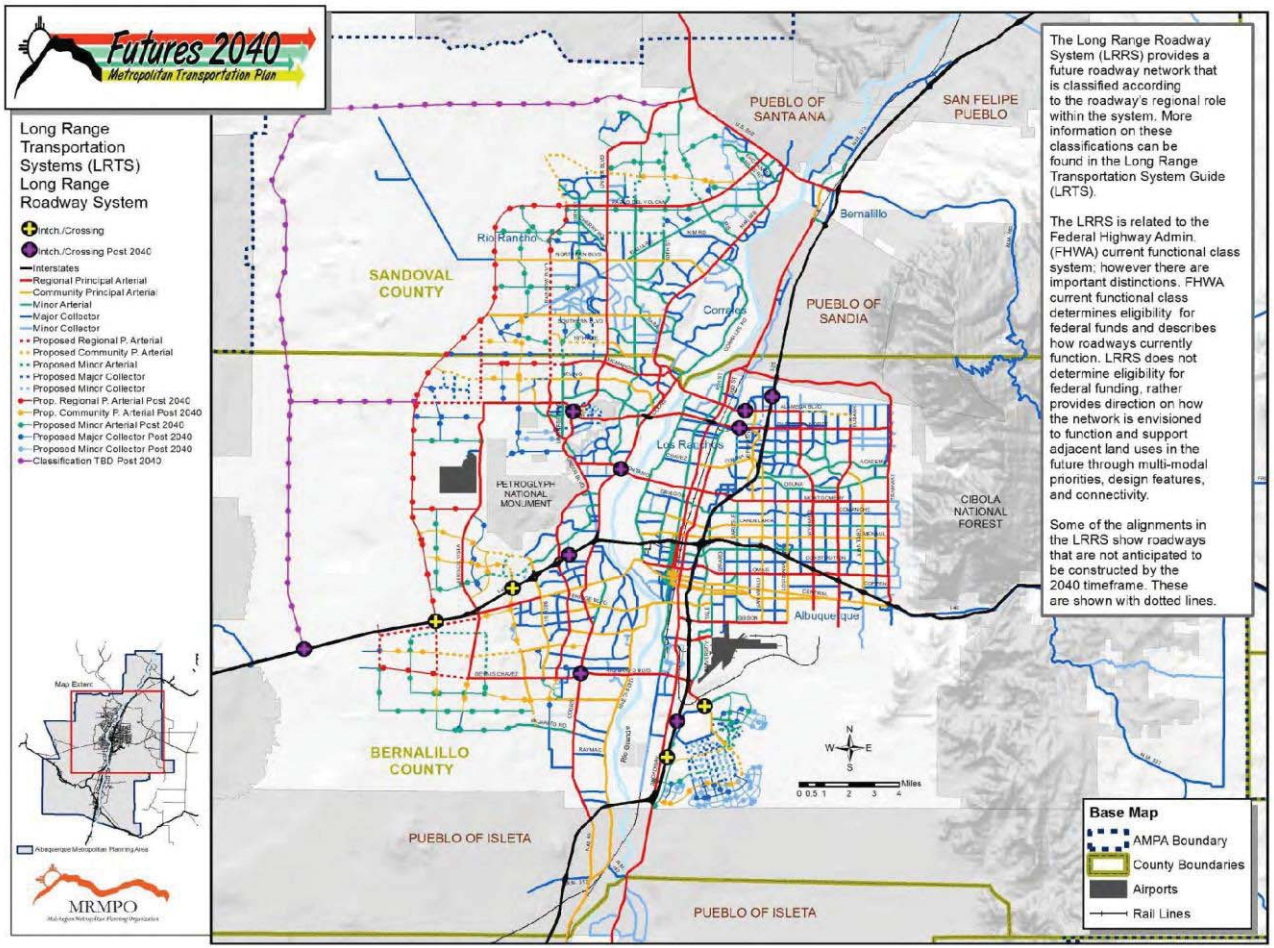

Figure 1 – MRCOGLong Range Transportation System

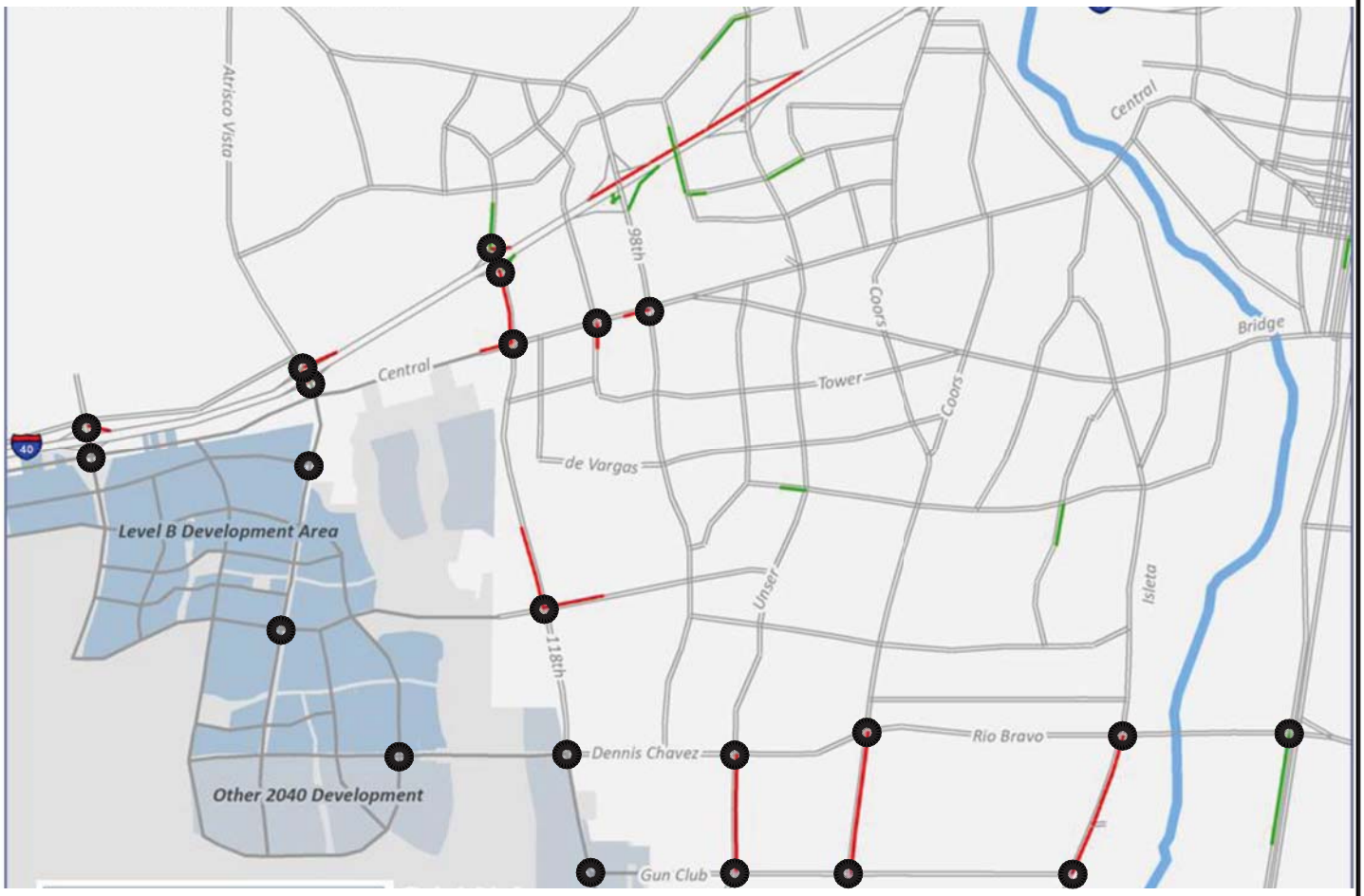

STUDY LOCATIONS

Bohannan Huston
www.bhinc.com 800.877.5332

Santolina Level B
Albuquerque, New Mexico
Intersections of Interest Analysis

FIGURE 2
Study Locations

C:\Users\cvermillion\appdata\local\temp\AcPublish_10104\F1-20160147-Vicinity.dwg Mar 29, 2016 - 2:21pm

II. ANALYSIS METHOD

The following section will describe the process for determining what locations were selected for further analysis and the methods used to perform the traffic analysis.

A. FORECAST TRAFFIC VOLUMES

The 2016 Level B Santolina Master Plan Transportation Master Plan Technical Appendix utilized the MRCOG regional travel demand model to develop the traffic forecasts for the Santolina scenarios of 2025 and 2040. The Santolina scenario modified the MRCOG Trend Scenario to account for the development of Santolina, as anticipated by the Santolina development team. This required "normalization" of the Trend Scenario socioeconomic data (future forecasts of population and employment) to reflect development in Santolina. This entailed reallocating future population growth and service/retail employment growth to Santolina from the west side of Albuquerque, Bernalillo County west of the river, Rio Rancho and Mesa del Sol. This was done as it was considered Santolina would compete for these future uses from these growth areas. Basic jobs, those with more intense uses such as manufacturing and industrial, were reallocated from throughout the MRCOG planning area, as it was considered Santolina would compete against the entire region for this type of economic development.

This normalization of future socioeconomic forecasts was done in coordination and consultation with MRCOG's Socioeconomic Program Manager. Details of the normalization process can be found in the 2016 Level B Santolina Transportation Master Plan Technical Appendix. However, it must be noted that the future population and employment anticipated in 2025 and 2040 in the Santolina scenario and the MRCOG Trend Scenario are identical. The Santolina scenario does not add any additional population or employment above that forecast by MRCOG in the Trend Scenario. In addition, no existing population or employment was reallocated to Santolina. Any changes in the socioeconomic forecasts from the Trend Scenario were adjusted from anticipated growth only.

In addition to the normalization of the socioeconomic forecast, the roadway network in the 2025 and 2040 MTP regional travel demand model were required to be modified to include the roadways needed to serve Santolina. In order to allow direct comparison with the 2025 and 2040 MTP results, roadways outside of the 2016 Level B Santolina Transportation Master Plan area were maintained at the laneage and configuration as anticipated by the 2040 MTP.

Only roadways within the boundary of the 2016 Level B Master Plan area were modified. This was done to determine the roadway network required to support Santolina within the 2016 Level B Santolina Master Plan Area boundaries.

B. COMPARISON WITH MRCOG MTP

The analysis method to determine traffic operations used in the 2016 Level B Santolina Master Plan transportation analysis was the same as that used in the 2040 MTP. As the MRCOG regional travel demand model is a link based model, i.e., it does not evaluate individual intersection performance, the initial analysis performed for the 2016 Level B Santolina Transportation Master also was based only on links (i.e., individual roadway sections).

This link analysis is based on the volume-to-capacity ratio (v/c) for each individual link in the roadway network.

The volume on the link is determined from the regional travel demand model based on the trip generation, trip distribution and assignment to individual roadways based on land use and roadway network configuration (functional classification, link speed and number of lanes).

The capacity of a link is the amount of traffic volume an individual link can accommodate at an acceptable level of service. The capacity of the links in the MRCOG travel demand model are established at an amount of traffic volume that would generally be considered to achieve an acceptable level of service (LOS) under most conditions. If the links show a v/c greater than 90% of capacity, this is an indication that additional analysis of those locations should be conducted to evaluate what improvements are required to achieve acceptable level of service, if they are feasible. LOS D is the typical value used in Albuquerque to determine if the traffic operations during the peak hour is considered acceptable level of service. All of the locations studied in this report can achieve LOS D or better, with reasonable improvements (none that exceed those found somewhere in the Albuquerque area).

The MRCOG, and 2016 Level B Santolina Transportation Master Plan traffic analysis, uses the following v/c criteria to determine roadway and network performance for individual links:

- Acceptable performance – v/c less ≤ 0.89
- Approaching capacity – v/c ≥ 0.90 and ≤ 0.99

- Overcapacity – v/c ≥ 1.00 and ≤ 1.09
- Severely congested 1 – v/c ≥ 1.10 and ≤ 1.50
- Severely congested 2 – v/c > 1.50

The 2016 Level B Santolina Transportation Master Plan Technical Appendix compared the Santolina scenario v/c ratios to the v/c ratios of the MRCOG Trend Scenario, for the horizon years 2025 and 2040, for the AM and PM peak hours. The 2016 Level B Santolina Transportation Master Plan Technical Appendix has complete graphics for these comparisons, however the 2040 AM peak hour comparison is shown in Figure 3. The rest of these comparisons from the Technical Appendix are included in Appendix A for reference. A review of Figure 2 and Figure 3 shows the study locations in this report match those identified in the 2016 Level B Santolina Transportation Master Plan Technical Appendix.

The locations selected to be evaluated were determined based on the comparison of performance on individual links between the MTP Trend scenario and the Santolina scenario. Those links where the v/c ratio increased, based on the ranges above, due to the Santolina scenario traffic, and where the change in traffic with Santolina was greater than 10%, were identified for further evaluation, and are discussed in this report.

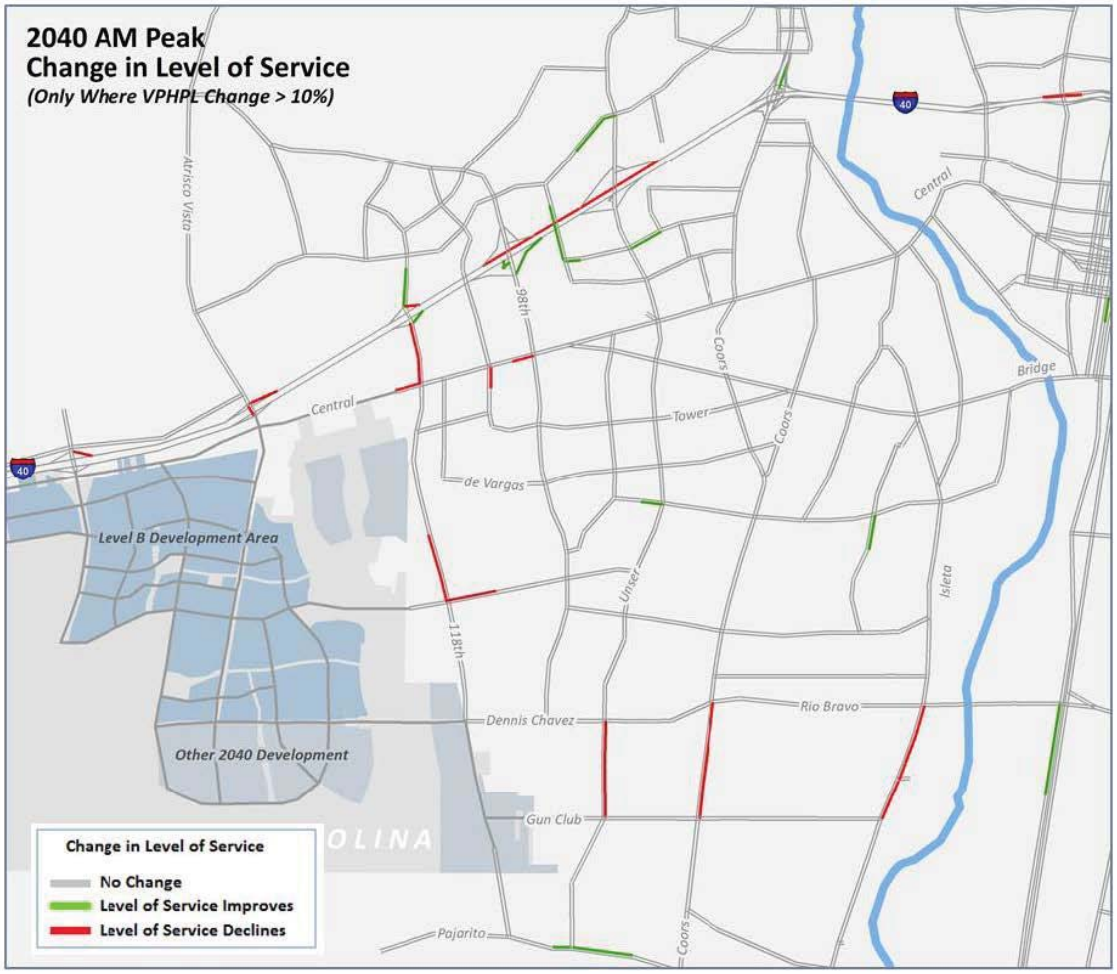

Figure 3 – 2040 AM Peak Hour Comparison – Santolina Scenario Compared to MRCOG Trend Scenario

C. DEVELOPMENT OF TURNING MOVEMENTS

Link volumes, by themselves, cannot be used to evaluate the specific traffic operational performance at intersections. Volumes for each movement (left turns, through traffic, right turns) are required for each approach to the intersection in order to determine the number of lanes, and turn lanes, required to achieve acceptable level of service. Therefore, a method for developing turning movements from link volumes is required.

National Cooperative Highway Research Program (NCHRP) Report 765, *Analytical Travel Forecasting Approaches for Project-Level Planning and Design*, describes a process for developing turning movements from link volumes. NCHRP 765 is an update to the previous methodology described in NCHRP 255. The process used in developing the turning movement volumes in this report is based on the NCHRP 765 procedures.

The method involves a process called iterative proportional fitting (IPF), or perhaps more commonly known as fratar. Fratar, or IPF, seeks to balance the incoming turning movements to the outgoing traffic turning movements based on simple proportions over multiple iterations, until the turning movements balance to some tolerance or number of iterations. This requires an initial estimate of the turning movements in order to begin the analysis. For this project, this was estimated by the outgoing volume on the links at each approach at the subject intersection. NCHRP 765 recommends that the percentage of turning volumes be limited so that the procedure does not over allocate movements to turning vehicles. Engineering judgment was used to determine this percentage, based on projected link volumes. Spreadsheets showing the development of the turning movements are included in Appendix B.

D. LOCATION ANALYSIS PROCEDURES

The primary analysis performed for this report was intersection analysis. This analysis used the Synchro® software analysis software, which uses the procedures of the Transportation Research Boards 2010 Highway Capacity Manual (HCM) to determine operational performance. The criteria for determining the level of service (LOS) at signalized intersections is shown in Table 1.

Table 1 – LOS Definitions

Level of Service	Signalized delay (Average Sec/veh)	Definition
A	<10	Most vehicles do not stop.
B	>10 and <20	Some vehicles stop.
C	>20 and <35	Significant numbers of vehicles stop.
D	>35 and <55	Many vehicles stop.
E	>55 and <80	Limit of acceptable delay.
F	>80	Unacceptable delay.

The number of lanes assumed at each intersection was based on the number of lanes anticipated to be present based on the 2025 and 2040 MTP. Appendix A: Project Listing of the 2040 MTP was used to determine the lanes at each location evaluated. If the Appendix A Project Listing had no improvements identified, the existing laneage was used. If the Appendix A Project Listing identified improvements at study locations, the laneage identified was used as the starting point for analysis. The Synchro capacity analysis summaries for the intersections evaluated are included in Appendix C.

For those locations where the 2016 Level B Santolina Transportation Master Plan found the links approaching the intersection were over capacity, these links were evaluated to determine if additional lanes were required.

E. ESTIMATION OF PROBABLE CONSTRUCTION COST PROCEDURES

The estimates of probable construction cost were developed using 2014 NMDOT unit prices. The estimates were based on conceptual layouts, and included the required lengths for turn bays, additional through lanes (if required), and signalization. The traffic signals had additional costs added to account for ITS and adaptive signal timing equipment. It was also assumed that each intersection would require a new traffic signal to accommodate the ITS and adaptive signal equipment.

For the on-site infrastructure not included in the locations of identified congestion in Figure 2, the typical roadway sections from the 2016 Level B Santolina Transportation Master Plan were estimated and applied to the estimated length of roadways. Traffic signal costs were also added at those locations anticipated to require traffic signals in the future.

All construction estimates also included gross receipts tax and a 30% contingency factor. The conceptual estimates for the roadway improvements and typical roadway sections are included in Appendix D.

III. OFF-SITE ANALYSIS

The analysis will begin with off-site mitigation requirements. These are considered "system" infrastructure, as the improvements will serve both Santolina and regional traffic. It is anticipated the costs of these improvements will be shared with the associated public entity, similar to traditional development impact mitigation practice.

The off-site improvements required by 2025 will be discussed first, with 2040 in the following section.

A. OFF-SITE IMPROVEMENTS BY 2025

The off-site intersections evaluated for 2025 are the Atrisco Vista I-40 interchange ramps. Both the westbound off-ramp and the eastbound on-ramp were identified as decreasing the level of service compared to the 2025 MTP Trend scenario.

1. ATRISCO VISTA AND WESTBOUND I-40 RAMP

The 2040 MTP does not include any project by 2025 to improve or add capacity at the I-40 Atrisco westbound off-ramp. Therefore, the existing geometry was used to determine additional improvements at the intersection to accommodate Santolina traffic. The level of service for 2025 is shown in Table 2 below.

Table 2 – 2025 Signalized Results – Atrisco Vista and WB I-40 Ramp

Signalized Intersections	2025 AM Peak			2025 PM Peak		
	Delay (sec.)	V/C	LOS	Delay (sec.)	V/C	LOS
Atrisco Vista and WB I-40 Ramp	15.0	0.60	B	12.2	0.52	B

The results show that the intersection can achieve acceptable level of service with minimal improvement. With the recent reconstruction of the interchange, sufficient off-ramp pavement width was constructed to accommodate future traffic. A second left turn lane can be striped within the existing pavement width, as it is currently striped out. The lanes required at the intersection are shown in Table 3.

Table 3 – 2025 Laneage – Atrisco Vista and WB I-40 Ramp											
EB			WB			NB			SB		
L	T	R	L	T	R	L	T	R	L	T	R
-	-	-	2	1	<	1	2	-	-	2	<

The estimated cost to improve the interchange is $630,460, which includes new traffic signals and 30% contingency.

2. ATRISCO VISTA AND EASTBOUND I-40 RAMP

The 2040 MTP does not include any project by 2025 to improve or add capacity at the I-40 Atrisco Eastbound off-ramp. Therefore, the existing geometry was used to determine additional improvements at the intersection to accommodate Santolina traffic. The level of service for 2025 is shown in Table 4 below.

Table 4 – 2025 Signalized Results – Atrisco Vista and EB I-40 Ramp						
Signalized Intersections	**2025 AM Peak**			**2025 PM Peak**		
	Delay (sec.)	**V/C**	**LOS**	**Delay (sec.)**	**V/C**	**LOS**
Atrisco Vista and EB I-40 Ramp	13.9	0.48	B	16.4	0.62	B

The results show that the intersection can achieve acceptable level of service with minimal improvement. With the recent reconstruction of the interchange, sufficient northbound approach lanes were constructed to accommodate future traffic. However, the outside northbound through lane requires re-striping to be a shared through/right turn lane, in addition to the existing northbound right turn lane, to provide two (2) right turn lanes onto I-40. The existing eastbound on-ramp also has two (2) lanes to accept this turning traffic, so no modifications will be required to the on-ramp. The lanes required at the intersection are shown in Table 5.

Table 5 – 2025 Laneage – Atrisco Vista and EB I-40 Ramp											
EB			WB			NB			SB		
L	T	R	L	T	R	L	T	R	L	T	R
>	1	1	-	-	-	-	2	<+1	1	2	-

The estimate cost to improve the interchange is $664,530, which includes new traffic signals and 30% contingency.

A graphic showing the locations, laneage and LOS is shown in Figure 4.

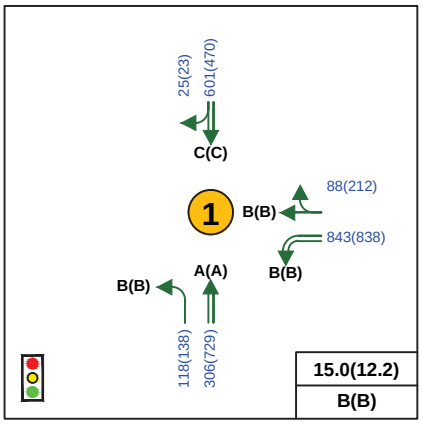

Atrisco Vista/I-40 WB Off

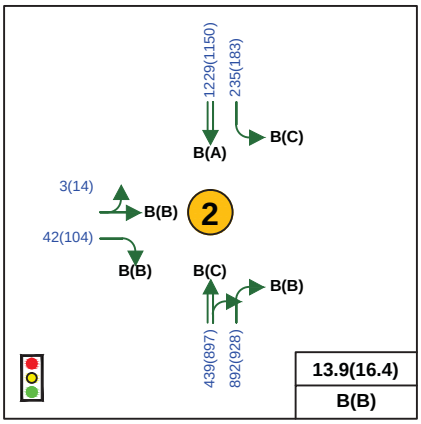

Atrisco Vista/I-40 EB Off

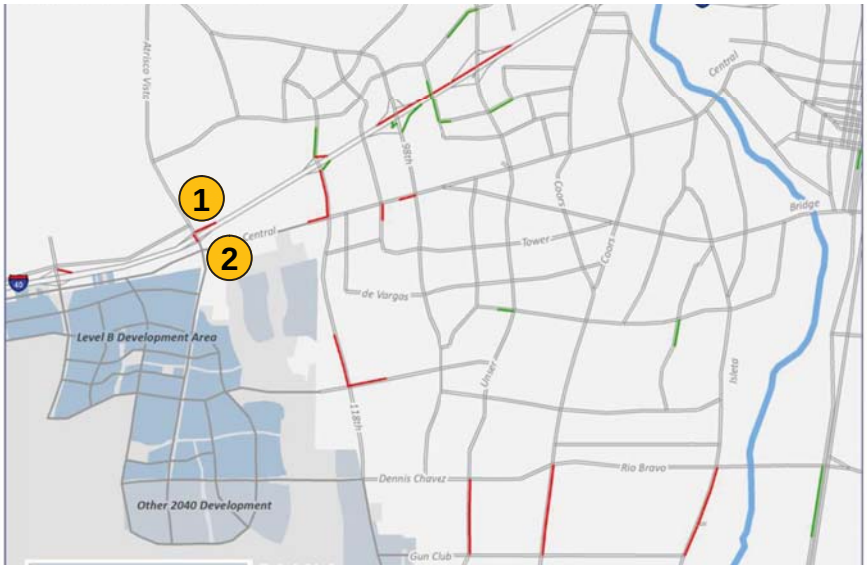

LEGEND

Thru Lanes (# as indicated)

Turning Lanes (# as indicated)

1234(1234) Trip Assignment Percentages

N Entering

X Exiting

Bohannan Huston
www.bhinc.com 800.877.5332

Santolina Level B
Albuquerque, New Mexico
Intersections of Interest Analysis

FIGURE 4
2025 Atrisco Vista / I40
Improvements

C:\Users\cvermillion\appdata\local\temp\AcPublish_10104\F3-20160147-2025AV.dwg Mar 29, 2016 - 2:22pm

B. OFF-SITE IMPROVEMENTS BY 2040

The following locations will be evaluated for 2040 Santolina scenario traffic conditions.

- I-40 and Future 118th Street Interchange Ramps
- Future 118th Street between Central and I-40
- Future 118th Street and Future Gibson
- Future 118th Street and Dennis Chavez
- Future 118th Street and Future Gun Club
- Central and 98th Street
- Central and Future 106th Street
- Dennis Chavez and Unser Boulevard
- Rio Bravo/Dennis Chavez and Coors
- Rio Bravo and Isleta Boulevard
- Rio Bravo and Broadway
- Future Gun Club and Future Unser Boulevard
- Gun Club and Coors
- Gun Club and Isleta Boulevard
- I-40 and Atrisco Vista Interchange Ramps
- I-40 and Future Paseo del Volcan Ramps

In addition, the following locations on I-40 will be considered:

- I-40 Westbound between Unser Boulevard and 98th Street interchanges
- I-40 Eastbound between Future 118th Street and Unser Boulevard interchange

1. I-40 AND FUTURE 118TH STREET INTERCHANGE WESTBOUND RAMPS

The 2040 MTP anticipates a new interchange with I-40 at 118th Street between 2025 and 2040. Although identified as 118th Street in the 2040 MTP, the exact alignment of the future roadway is unknown at this time, and will be determined during the NMDOT Location Study Procedures study and design process. However, to maintain consistency with existing documentation, the roadway will be referred to as 118th Street.

The 2040 MTP and Long Range Transportation System anticipate the following projects to be constructed along 118th Street:

- MPO Project #526.7, currently planned as a privately funded project, to construct an interchange at 118th Street and I-40 between the years of 2025 and 2040, with an estimated cost of $25 million.
- MPO project #526.4, a Bernalillo County project (estimated cost $5.3 million) to build 118th Street from Eucariz to I-40 by 2025. Although not identified, this is expected to be a 4-lane roadway
- MPO project #526.5, a privately funded project of $2.15 million, will construct a 4-lane 118th Street from I-40 to Ladera by 2025.
- MPO project #414.3, a privately funded project of $2.2 million to construct a I-40 frontage road between Arroyo Vista and 118th Street on the north side of I-40, by 2025.
- MPO project #526.3 (privately funded at $6.6 million) to extend 118th Street from Ladera as a 2-lane road farther north into the Westland North Master Plan Town Center area by 2025.
- MPO project #526.1 (privately funded at $2.8 million) will extend 118th Street as a 4-lane road south from Eucariz to Amole Arroyo by 2025.
- MPO project #526.0 (City of Albuquerque funding of $8.1 million) will continue 118th Street as a 2-lane road south from Amole Arroyo to Dennis Chavez by 2025.
- MPO project # 526.2 (privately funded at $1.98 million) to extend 118th Street as a 2-lane road from Dennis Chavez to Pajarito Road by 2025.

These improvements will result in 118th Street being a continuous roadway from Pajarito Road on the south to north of I-40 by 2025, with an interchange with I-40 added between 2025 and 2040. This is expected to relieve congestion along 98th Street and the associated congestion at the 98th Street/Arroyo Vista interchange with I-40.

The level of service at the intersection in 2040 is shown in Table 6 below.

Table 6 – 2040 Signalized Results – Future 118th Street and WB I-40 Ramp

Signalized Intersections	2040 AM Peak			2040 PM Peak		
	Delay (sec.)	V/C	LOS	Delay (sec.)	V/C	LOS
Future 118th Street and WB I-40 Ramp*	27.1	0.94	C	20.7	0.70	C

*- future laneage to be determined by NMDOT Location Study Procedures during NMDOT interchange study process

The results show that the intersection can achieve acceptable level of service with minimal improvement. The actual laneage will be determined by the NMDOT during the NMDOT Location Study Procedures study process when evaluating the interchange. The laneage used in the analysis is shown in Table 7.

Table 7 – 2040 Laneage – Future 118th Street and WB I-40 Ramp

EB			WB			NB			SB		
L	T	R	L	T	R	L	T	R	L	T	R
-	-	-	1	1	<	1	1	-	-	2	<

*- future laneage to be determined by NMDOT Location Study Procedures during NMDOT interchange study process

As mentioned above, the 2040 MTP estimates the cost of the 118th Street interchange with I-40 at $25 million. It is expected the NMDOT interchange study, when conducted, will design the interchange for the 20-year traffic projection at the time of the study. Therefore it is assumed the interchange will accommodate the expected laneage presented in Table 7.

A graphic showing the locations, laneage and LOS for all 118th Street improvement locations is shown in Figure 5.

2. I-40 AND FUTURE 118TH STREET INTERCHANGE EASTBOUND RAMPS

Section III.B.1, on page 19, identified the improvements along 118th Street anticipated in the 2040 MTP. The level of service for the intersection is shown in Table 8 below.

Table 8 – 2040 Signalized Results – Future 118th Street and EB I-40 Ramp

Signalized Intersections	2040 AM Peak			2040 PM Peak		
	Delay (sec.)	V/C	LOS	Delay (sec.)	V/C	LOS
Future 118th Street and EB I-40 Ramp*	21.1	0.81	C	18.5	0.75	B

*- future laneage to be determined by NMDOT Location Study Procedures during NMDOT interchange study process

The results show that the intersection can achieve acceptable level of service with minimal improvement. The actual laneage will be determined by the NMDOT during the NMDOT Location Study Procedures study process when evaluating the interchange.

Table 9 – 2040 Laneage – Future 118th Street and EB I-40 Ramp

EB			WB			NB			SB		
L	T	R	L	T	R	L	T	R	L	T	R
1	1	<	-	-	-	-	1	1	1	2	-

*- future laneage to be determined by NMDOT Location Study Procedures during NMDOT interchange study process

As mentioned above, the 2040 MTP estimates the cost of the 118th Street interchange with I-40 at $25 million. It is expected the NMDOT interchange study, when conducted, will design the interchange for the 20-year traffic projection at the time of the study. Therefore it is assumed the interchange will accommodate the expected laneage presented in Table 9.

A graphic showing the locations, laneage and LOS for all 118th Street improvement locations is shown in Figure 5.

3. FUTURE 118TH STREET AND CENTRAL AVENUE

Section III.B.1, on page 19, identified the improvements along 118th Street anticipated in the 2040 MTP. Although identified as 118th Street in the 2040 MTP, the exact alignment of the future roadway intersection with Central Avenue is unknown, however to maintain consistency with existing documentation, the roadway will be referred to as 118th Street.

The lane requirements for the intersection will not change, as it is the interchange with I-40 that attracts the traffic to the intersection.

Currently Central Avenue has 2-lanes in each direction, and the 2040 MTP does not anticipate any changes in laneage along Central in this area. Therefore, the starting geometry for the analysis considered the existing laneage. The level of service for the intersection is shown in Table 10 below.

Table 10 – 2040 Signalized Results – Future 118th Street and Central Avenue

Signalized Intersections	2040 AM Peak			2040 PM Peak		
	Delay (sec.)	V/C	LOS	Delay (sec.)	V/C	LOS
Future 118th Street and Central Avenue	21.1	0.81	C	18.5	0.75	B

The results show that the intersection will require improvement above that currently existing at the proposed intersection. Two eastbound left turn lanes will be required to accommodate traffic destined for the interstate. Other than the additional eastbound left turn lane, the existing through lanes on Central Avenue and expected construction on 118th Street, will accommodate future traffic levels. Eastbound, westbound and southbound right turn lanes are also required.

Table 11 – 2040 Laneage – Future 118th Street and Central Avenue

EB			WB			NB			SB		
L	T	R	L	T	R	L	T	R	L	T	R
2	2	1	1	2	1	1	2	<	1	2	1

The estimated construction costs to add the required additional improvements above that anticipated by the 2040 MTP is $1.272 million, including a 30% contingency.

A graphic showing the locations, laneage and LOS for all 118th Street improvement locations is shown in Figure 5.

4. FUTURE 118TH STREET AND FUTURE GIBSON

Section III.B.1, on page 19, identified the improvements along 118th Street anticipated in the 2040 MTP. This location will also require a short extension (approximately one-quarter (¼) mile), of Gibson from the east to 118th Street, as well as the construction of Gibson up the escarpment to Atrisco Vista. The costs for extending Gibson from 118th Street to Atrisco Vista will be discussed in Section IV, On-Site Analysis, beginning on page 50. The Santolina 2016 Level B Transportation Master Plan Technical Appendix anticipates the Gibson extension up the escarpment will be built between 2025 and 2040.

As MPO Project #526.0 anticipates construction of a 2-lane 118th Street between Dennis Chavez and Amole Arroyo, the analysis assumed 2-lanes as the initial laneage on 118th Street. The Santolina 2016 Level B Transportation Master Plan Technical Appendix anticipates a 6-lane Gibson Boulevard up the escarpment, and that laneage was used west of 118th Street. East of 118th Street it was assumed that one-lane of Gibson west of its present terminus would be constructed by the development adjacent to Gibson and 118th Street. West of Delgado Road, approximately one-quarter (¼) mile east of the 118th Street alignment, Gibson has 2-lanes in each direction under existing conditions. The level of service for the intersection is shown in Table 12 below.

Table 12 – 2040 Signalized Results – Future 118th Street and Future Gibson Extension

Signalized Intersections	2040 AM Peak			2040 PM Peak		
	Delay (sec.)	V/C	LOS	Delay (sec.)	V/C	LOS
Future 118th Street and Future Gibson Extension	27.6	0.65	C	27.5	0.77	C

The results show that the intersection will require improvement above that currently expected at the proposed intersection. Two eastbound left turn lanes will be required eastbound and northbound. Two lanes are required in each direction on 118th Street will be required, as well as three eastbound and westbound through lanes. One of the southbound through lanes will be a shared right turn lane, with a separate, dedicated right turn also required. The lanes required at future 118th Street and future Gibson in 2040 are shown in Table 13.

Table 13 – 2040 Laneage – Future 118TH Street and Future Gibson Extension											
EB			WB			NB			SB		
L	T	R	L	T	R	L	T	R	L	T	R
2	3	1	1	3	<	2	2	<	1	2	<+1

West of 118th Street, the Gibson Boulevard costs will be discussed in the On-Site Analysis section, Section IV, beginning on page .50. As the discussion above at 118th and Central found two lanes in each direction was required on 118th Street, but the following discussion of Future 118th Street and Dennis Chavez, 118th Street will be shown to require only one-lane in each direction at the 118th Street intersection with Dennis Chavez. That suggests that 118th Street does not need to be two lanes in each direction the entire length from Dennis Chavez to Gibson. Therefore, this analysis assumed widening of 118th Street to two lanes in each direction from Amole Arroyo (where the four-lane section ends from MPO Project #526.1), to one-half mile south of Gibson. This one-half mile section of two lanes in each direction will provide sufficient capacity through the 118th Street and Gibson intersection. This is also demonstrated in the 2016 Level B Santolina Transportation Master Plan Technical Appendix, which shows the link south of Gibson on 118th Street to have a v/c ratio of less than 0.99 in both the AM and PM 2040 forecasts. The graphics are also included in Appendix A of this document.

The estimated construction costs to add the required additional improvements above that anticipated in the 2040 MTP is $2.863 million, including a 30% contingency. This estimate includes widening Gibson to 3 lanes in each direction from 98th Street to 118th Street, widening 118th Street to 2 lanes in each direction from Amole Arroyo to one-quarter mile south of Gibson, and the intersection improvements required.

A graphic showing the locations, laneage and LOS for all 118th Street improvement locations is shown in Figure 5.

5. FUTURE 118TH STREET AND DENNIS CHAVEZ

Section III.B.1, on page 19, identified the improvements along 118th Street anticipated in the 2040 MTP. The costs for widening Dennis Chavez from 118th Street to Atrisco Vista will be discussed in Section IV, On-Site Analysis beginning on page 50.

The Santolina 2016 Level B Transportation Master Plan Technical Appendix anticipates Dennis Chavez up the escarpment will be widened to 2 lanes in each direction by 2025 and to 3 lanes in each direction between 2025 and 2040.

As MPO Project #526.0 and 526.2 anticipates construction of a 2-lane 118th Street (one in each direction) between Amole Arroyo and Pajarito Road, the analysis assumed 2-lanes as the initial laneage on 118th Street. The Santolina 2016 Level B Transportation Master Plan Technical Appendix anticipates a 6-lane Dennis Chavez up the escarpment, and that laneage was used west of 118th Street. East of 118th Street it was assumed that Dennis Chavez would be two lanes in each direction, based on the MRCOG travel demand model laneage. The level of service for the intersection is shown in Table 14 below.

Table 14 – 2040 Signalized Results – 118TH Street and Dennis Chavez

Signalized Intersections	2040 AM Peak			2040 PM Peak		
	Delay (sec.)	V/C	LOS	Delay (sec.)	V/C	LOS
118th Street and Dennis Chavez	39.1	0.97	D*	44.0	1.02	D**

*- northbound left LOS E
**-eastbound left LOS E, westbound left LOS F

The results show that the intersection will require improvement above that currently expected at the proposed intersection. Three lanes are required for eastbound and westbound through traffic. However, as will be shown later in the discussion of Unser and Dennis Chavez, Section III.B.9, on page 33, only two through lanes are required in each direction at Unser. Therefore, these additional lanes are only required on Dennis Chavez through the intersection at 118th Street in order to provide an overall acceptable level of service. This is also demonstrated in the 2016 Level B Santolina Transportation Master Plan Technical Appendix, which shows the link east of 118th Street on Dennis Chavez to have a v/c ratio of less than 0.99 in both the AM and PM 2040 forecasts as a four-lane road (two in each direction). The graphics are also included in Appendix A of this document. The lanes required at future 118th Street and Dennis Chavez in 2040 are shown in Table 15.

Table 15 – 2040 Laneage – 118th Street and Dennis Chavez											
EB			WB			NB			SB		
L	T	R	L	T	R	L	T	R	L	T	R
1	3	1	1	3	1	2	1	1	1	1	1

The analysis found that, although the overall intersection operates at an acceptable level of service, LOS D, there are movements that are forecast to operate at LOS E or F in 2040. This is considered acceptable at this time for the following reasons:

- The intersection overall operates at an acceptable level of service (LOS D)
- Additional improvements, widening to 4 lanes in each direction, is not desirable
- The Development Agreement provides mechanisms to provide for appropriate contributions by the Developer toward required improvements, and an initial estimate of the construction cost has been provided
- The current MRCOG travel demand model used in the analysis has limited transit mode choice options, and transit use is expected to increase in the future, due to the commitment of the region to transit improvements.
- There is uncertainty in the traffic forecasts due the assumptions used in developing the travel demand forecasts and the normalization of the data to include Santolina
- The intersection will continue to be evaluated before actual construction occurs

West of 118th Street, the Dennis Chavez costs will be discussed in the On-Site Analysis section, Section IV, beginning on page .50. The estimated construction costs to add the required additional improvements at the intersection above that anticipated in the 2040 MTP is $1.409 million, including a 30% contingency.

A graphic showing the locations, laneage and LOS for all 118th Street improvement locations is shown in Figure 5.

6. FUTURE 118TH STREET AND FUTURE GUN CLUB

Section III.B.1, on page 19, identified the improvements along 118th Street anticipated in the 2040 MTP. This included MPO Project #526.2, to construct a 2-lane road on 118th Street from Dennis Chavez to Gun Club. In addition, MPO Project #838.0, Gun Club roadway improvements from 118th Street to Isleta Boulevard. The level of service for the intersection is shown in Table 16.

Table 16 – 2040 Signalized Results – Future 118th Street and Future Gun Club

Signalized Intersections	2040 AM Peak			2040 PM Peak		
	Delay (sec.)	V/C	LOS	Delay (sec.)	V/C	LOS
Future 118th Street and Future Gun Club	18.8	0.84	B	14.0	0.75	B

The results show that the intersection will operate at acceptable levels of service under the number of lanes expected in the 2040 MTP. Turn lanes at the intersections are required. The lanes required at future 118th Street and Dennis Chavez in 2040 are shown in Table 17.

Table 17 – 2040 Laneage – Future 118th Street and Future Gun Club

EB			WB			NB			SB		
L	T	R	L	T	R	L	T	R	L	T	R
-	-	-	1	1	<	-	1	1	1	1	-

The estimated construction costs to add the required additional improvements above that anticipated in the 2040 MTP is $551,000, including a 30% contingency.

A graphic showing the locations, laneage and LOS for all 118th Street improvement locations is shown in Figure 5.

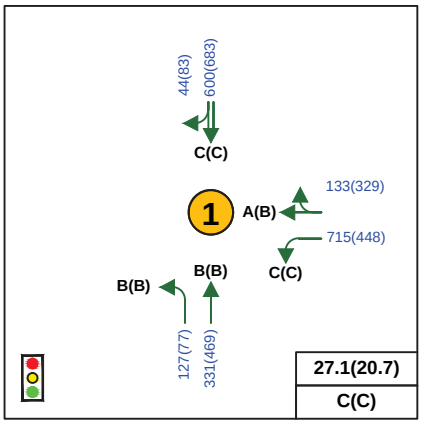

118th/I-40 WB

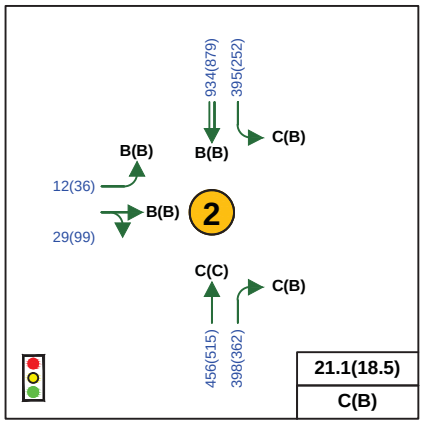

118th/I-40 EB

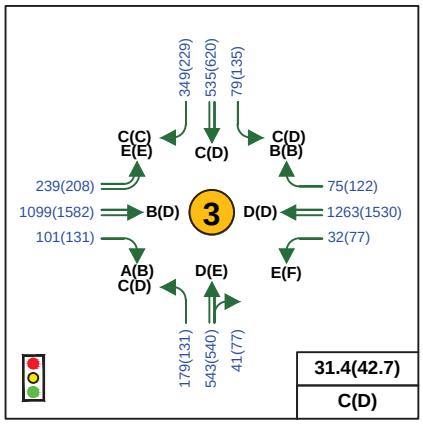

118th/Central

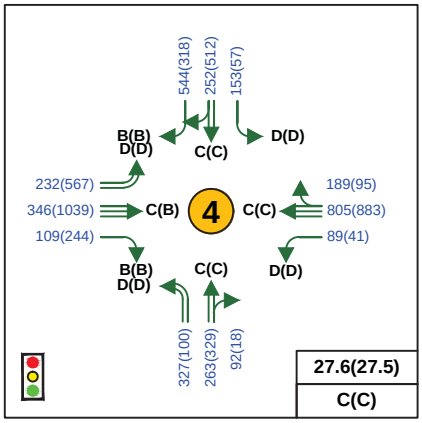

118th/Gibson

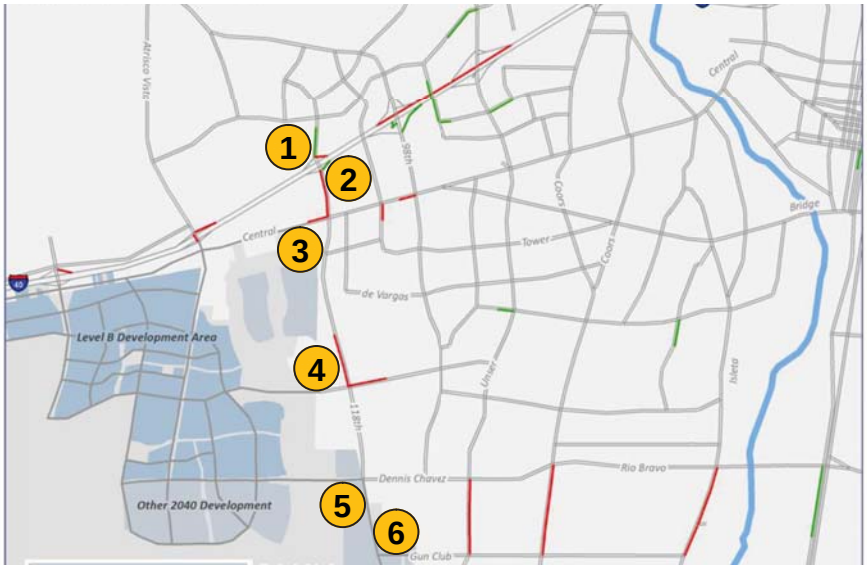

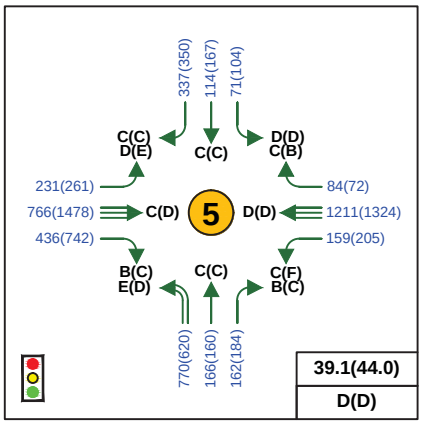

118th/Dennis Chavez

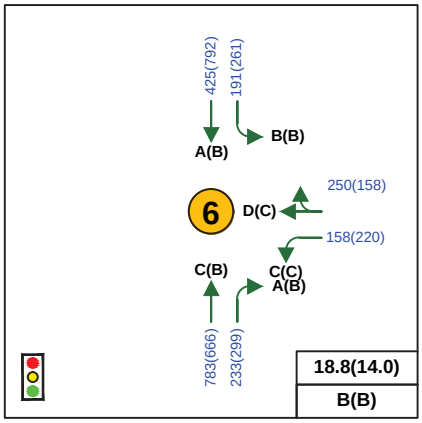

118th/Gun Club

LEGEND

Thru Lanes (# as indicated)

Turning Lanes (# as indicated)

1234(1234) Trip Assignment Percentages

N Entering

X Exiting

Bohannan Huston
www.bhinc.com 800.877.5332

Santolina Level B
Albuquerque, New Mexico
Intersections of Interest Analysis

FIGURE 5
2040 118th Street Intersection Improvements

C:\Users\cvermillion\appdata\local\temp\AcPublish_10104\F6-20160147-2040 118th.dwg Mar 29, 2016 - 2:23pm

7. CENTRAL AND 98TH STREET

The 2040 MTP does not anticipate any improvements to the intersection of Central and 98th Street, therefore, the existing laneage was used as the starting point in the analysis. Additional turn lanes are required to achieve acceptable level of service, however the existing number of through lanes on Central are adequate. The level of service for the intersection is shown in Table 18 below.

Table 18 – 2040 Signalized Results – Central and 98th Street

Signalized Intersections	2040 AM Peak			2040 PM Peak		
	Delay (sec.)	V/C	LOS	Delay (sec.)	V/C	LOS
Central and 98th Street	35.7	0.97	D*	45.9	1.00	D**

*- northbound and southbound left LOS E
**-WB left, NB Thru/right, SB Left and Through LOS E, EB Left, WB Thru, NB Left LOS F

The analysis found that, although the overall intersection operates at an acceptable level of service, LOS D, there were movements that are forecast to operate at LOS E or F in 2040. This is considered acceptable at this time for the following reasons:

- The intersection overall operates at an acceptable level of service (LOS D)
- The current MRCOG travel demand model used in the analysis has limited transit mode choice options, and transit use is expected to increase in the future, due to the large commitment to transit improvements in the region. This is especially true for Central Avenue, given the investment in bus rapid transit (ART) (MPO Project #345.3, $48.6 million (City), Project 345.3, $85 million (City))
- The City of Albuquerque has project, MPO Project #175.0 and 66.0 to add ITS equipment to Central Avenue between 2015 and 2025,
- The intersection will continue to be evaluated before actual construction occurs
- The Development Agreement provides mechanisms to provide for appropriate contributions by the Developer toward required improvements, and an initial estimate of the construction cost has been provided

The lanes required at Central and 98th Street in 2040 are shown in Table 19.

Table 19 – 2040 Laneage – Central and 98th Street											
EB			WB			NB			SB		
L	T	R	L	T	R	L	T	R	L	T	R
2	2	<	2	2	1	2	2	<	2	2	1

The estimated construction costs to add the required additional improvements above that anticipated in the 2040 MTP is $1.172 million, including a 30% contingency.

A graphic showing the locations, laneage and LOS for the Central Avenue improvements is shown in Figure 6.

8. CENTRAL AND 106TH STREET

The 2040 MTP anticipates addition freeway overpasses at select locations by 2040, including a 106th Street overpass over I-40 in the 2040 regional travel demand model. No other improvements are identified and the existing laneage will be used in the analysis. The level of service for the intersection is shown in Table 20 below.

Table 20 – 2040 Signalized Results – Central and 106th Street						
Signalized Intersections	**2040 AM Peak**			**2040 PM Peak**		
	Delay (sec.)	**V/C**	**LOS**	**Delay (sec.)**	**V/C**	**LOS**
Central and 106th Street	29.7	0.90	C	25.8	0.90	C

The analysis found the intersection would operate at acceptable levels of service with the existing through lanes on Central Avenue, but would require two left turn lanes in the eastbound and westbound directions. This will require two lanes on 106th Street for a short stretch to accept the dual left turn lanes from Central. An additional one-quarter (¼) mile of lane widening on 106th Street was added to the cost estimate to account for this improvement. The lanes required at Central and 106th Street in 2040 are shown in Table 21.

Table 21 – 2040 Laneage – Central and 106th Street											
EB			WB			NB			SB		
L	T	R	L	T	R	L	T	R	L	T	R
2	2	1	2	2	1	1	1	1	1	1	1

The estimated construction costs to add the required additional improvements above that anticipated in the 2040 MTP is $1.602 million, including a 30% contingency.

A graphic showing the locations, laneage and LOS for the Central Avenue improvements is shown in Figure 6.

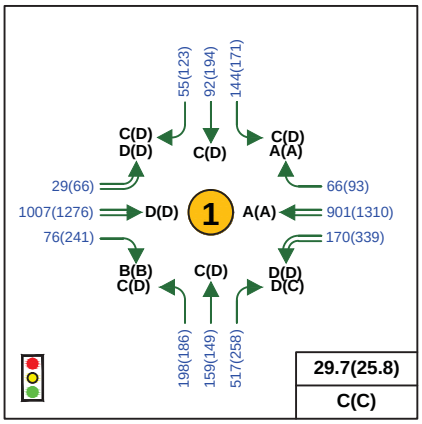

106th Street/Central

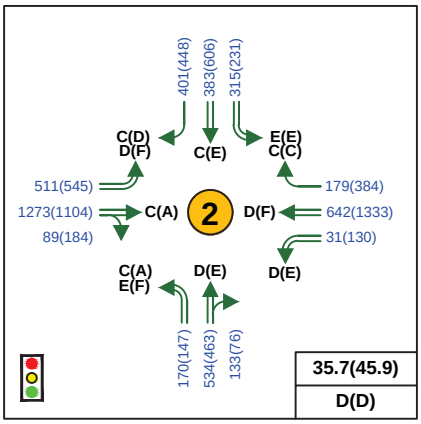

98th Street/Central

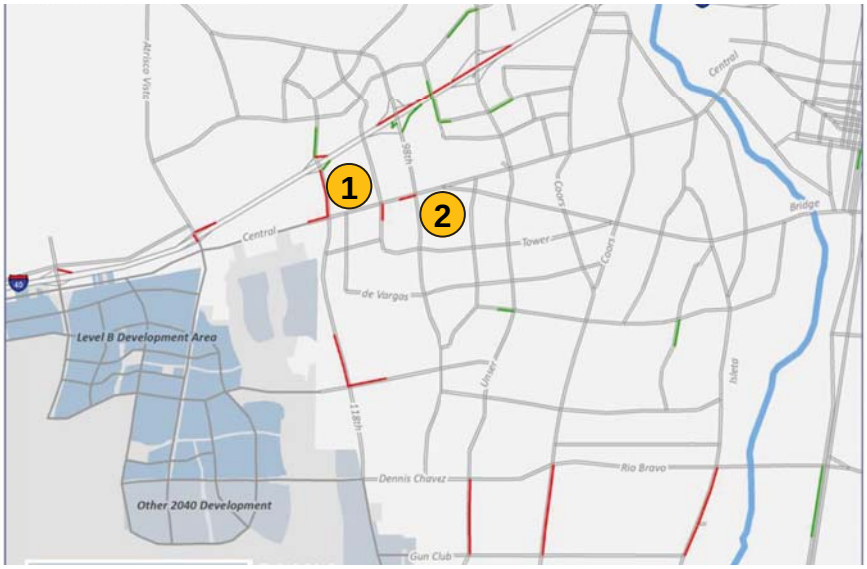

LEGEND

Thru Lanes (# as indicated)

Turning Lanes (# as indicated)

1234(1234) Trip Assignment Percentages

N Entering

X Exiting

Bohannan Huston
www.bhinc.com 800.877.5332

Santolina Level B
Albuquerque, New Mexico
Intersections of Interest Analysis

FIGURE 6
2040 Central Ave - 106th and 98th
Intersection Improvements

C:\Users\cvermillion\appdata\local\temp\AcPublish_10104\F7-20160147-2040Central.dwg Mar 29, 2016 - 2:24pm

9. DENNIS CHAVEZ AND UNSER

As mentioned previously, the 2040 MTP travel demand model has two through lanes on Dennis Chavez. No changes to Unser are identified in the 2040 MTP, so existing laneage was used in the analysis. The level of service for the intersection is shown in Table 22 below.

Table 22 – 2040 Signalized Results – Dennis Chavez and Unser

Signalized Intersections	2040 AM Peak			2040 PM Peak		
	Delay (sec.)	V/C	LOS	Delay (sec.)	V/C	LOS
Dennis Chavez and Unser	27.3	0.96	C	48.1	1.03	D*
*-NB Left, SB Approach LOS E, EB Thru, WB Left LOS F						

The analysis found the intersection would operate at LOS D, although some movements would operate at LOS E or F. For reasons given previously (additional transit options in the future and the uncertainty of forecasting travel demand in the future, development agreement commitments for contributing to improvements), the above results are considered satisfactory at this time. The lanes required at Dennis Chavez and Unser in 2040 are shown in Table 23.

The link analysis conducted for the 2016 Level B Santolina Transportation Master Plan analysis also indicated that Unser between Gun Club and Dennis Chavez would be overcapacity, indicating a need to widen Unser to two lanes in each direction. For purposes of this cost estimate, Unser was widened to two lanes in each direction from Dennis Chavez south to Gun Club.

Table 23 – 2040 Laneage – Dennis Chavez and Unser

EB			WB			NB			SB		
L	T	R	L	T	R	L	T	R	L	T	R
1	2	1	1	2	1	1	2	1	1	2	1

The estimated construction costs to add the required additional improvements above that anticipated in the 2040 MTP is $1.485 million, including a 30% contingency.

A graphic showing the locations, laneage and LOS for the Dennis Chavez/Rio Bravo and Gun Club improvements is shown in Figure 7.

10. DENNIS CHAVEZ/RIO BRAVO AND COORS

No changes to Dennis Chavez/Rio Bravo or Coors is identified in the 2040 MTP, so existing laneage was used as a starting point in the analysis, although the intersection is identified on the MRCOG Long Range Transportation System as a future grade separated interchange, similar to Coors and Paseo del Norte (see Figure 1). The level of service for the intersection is shown in Table 24 below. Significant improvements were required to achieve overall LOS D at this intersection.

Table 24 – 2040 Signalized Results – Dennis Chavez/Rio Bravo and Coors

Signalized Intersections	2040 AM Peak			2040 PM Peak		
	Delay (sec.)	V/C	LOS	Delay (sec.)	V/C	LOS
Dennis Chavez/Rio Bravo and Coors	49.61	1.02	D*	52.2	1.02	D**

*-EB Left, WB Left LOS E, WB Thru, NB Thru, SB Left LOS F
**WB Left, NB Left LOS E, EB Thru, SB Left LOS F

The analysis found the intersection would operate at LOS D, although some movements would operate at LOS E or F, even with the addition of additional turn lanes and widening of Coors (dual lefts from Coors onto Dennis Chavez/Rio Bravo (existing), triple lefts from Dennis Chavez/Rio Bravo onto Coors, and three lanes in each direction on Coors). For reasons given previously (additional transit options in the future, the uncertainty of forecasting travel demand in the future, and Development Agreement commitments for contributing to improvements), the above results are considered satisfactory at this time. In addition, MPO Project #209.0 anticipates construction by 2025 of an adaptive signal control technology project along Coors Rio Bravo from Coors to University Boulevard. This project should improve traffic operations along Rio Bravo Boulevard above that seen from traditional signal timing approaches.

The lanes required at Dennis Chavez/Rio Bravo and Coors in 2040 are shown in Table 25. It can be seen the intersection is a candidate for a grade separated interchange.

The construction of the interchange will reduce the number of left turn lanes required of the at-grade intersection from that shown below, and would be able to maintain Coors Boulevard as a 4-lane roadway. For the purposes of the cost estimate, Coors was only considered to be widened to three lanes in each direction through the intersection, as the v/c ratio for Coors in the 2016 Level B Santolina Transportation Master Plan was less than 1.09 but greater than 1.0. This small exceedance of v/c was considered to be acceptable given the likelihood of reduced trips due to increased transit and the more efficient operation resulting from the adaptive signal timing on Rio Bravo, which would alleviate the need for widening of Coors. However, the intersection of two heavily used principal arterials generally result in high levels of congestion during peak hours.

Table 25 – 2040 Laneage – Dennis Chavez/Rio Bravo and Coors

EB			WB			NB			SB		
L	T	R	L	T	R	L	T	R	L	T	R
3	2	1	3	2	1	2	3	1	2	3	1

The estimated construction costs to add the required additional improvements above that anticipated in the 2040 MTP is $1.332 million, including a 30% contingency.

A graphic showing the locations, laneage and LOS for the Dennis Chavez/Rio Bravo and Gun Club improvements is shown in Figure 7.

11. RIO BRAVO AND ISLETA

No changes to Rio Bravo or Isleta is identified in the 2040 MTP, so existing laneage was initially used in the analysis. Additional lanes on Rio Bravo and Isleta were required to achieve overall LOS D, however some movement would operate at LOS E or F. The level of service for the intersection is shown in Table 26.

Table 26 – 2040 Signalized Results – Rio Bravo and Isleta

Signalized Intersections	2040 AM Peak			2040 PM Peak		
	Delay (sec.)	V/C	LOS	Delay (sec.)	V/C	LOS
Rio Bravo and Isleta	35.3	0.90	D*	42.0	1.02	D**

*-SB Left LOS E
**-WB Left, SB Left LOS E, EB Thru LOS F

For reasons given previously (additional transit options in the future, the uncertainty of forecasting travel demand in the future, Development Agreement commitments for contributing to improvements), the above results are considered satisfactory at this time. Also, as mentioned, MPO Project #209.0 anticipates construction by 2025 of an adaptive signal control technology project along Coors Rio Bravo from Coors to University Boulevard. This project should improve traffic operations along Rio Bravo Boulevard above that seen from traditional signal timing approaches.

The lanes required at Dennis Chavez/Rio Bravo and Isleta in 2040 are shown in Table 27. The analysis required three lanes for westbound and eastbound traffic on Rio Bravo, however, the link analysis performed for the 2016 Level B Santolina Transportation Master Plan analysis indicates the roadway section of Rio Bravo between Coors and Isleta and Isleta and Broadway was not overcapacity, indicating the overcapacity was located at the intersection. Therefore, the cost estimate includes widening of Rio Bravo to three through lanes in each direction for a one-half (½) mile in each direction on Rio Bravo.

Table 27 – 2040 Laneage – Rio Bravo and Isleta

EB			WB			NB			SB		
L	T	R	L	T	R	L	T	R	L	T	R
2	3	1	2	3	2	2	2	2	2	2	1

The link analysis in the 2016 Level B Santolina Transportation Master Plan also found Isleta to be overcapacity, with a v/c ratio less than 1.09, but greater than 1.0. For purposes of the estimate, Isleta was widened to two through lanes in each direction through the intersection, again with the expectation the adaptive signal control and increased transit use

would provide sufficient reduction in traffic volume to allow congested, but acceptable (LOS D or better) operation.

The estimated construction costs to add the required additional improvements above that anticipated in the 2040 MTP is $2.319 million, including a 30% contingency.

A graphic showing the locations, laneage and LOS for the Dennis Chavez/Rio Bravo and Gun Club improvements is shown in Figure 7.

12. RIO BRAVO AND BROADWAY

No changes to Rio Bravo or Broadway is identified in the 2040 MTP, so existing laneage was used as the starting point in the analysis. This intersection is also currently being studied by the NMDOT as part of the I-25/Rio Bravo interchange project. Discussions with the NMDOT project team indicate that improvements (widening of Rio Bravo to three lanes through the intersection) are being considered. In addition to this improvement, the analysis found additional turn lanes and through on Broadway are also required to achieve acceptable level of service during the peak hour The level of service for the intersection is shown in Table 28 below.

Table 28 – 2040 Signalized Results – Rio Bravo and Broadway

Signalized Intersections	2040 AM Peak			2040 PM Peak		
	Delay (sec.)	V/C	LOS	Delay (sec.)	V/C	LOS
Rio Bravo and Broadway	39.9	1.00	D*	42.4	0.99	D**

*-NB Left LOS E
**-WB Left, NB Left LOS E

The analysis found the intersection would operate at LOS D, although some movements would operate at LOS E or F. For reasons given previously (additional transit options in the future and the uncertainty of forecasting travel demand in the future, development agreement commitments for contributing to improvements), the above results are considered satisfactory at this time. In addition, MPO Project #209.0 anticipates construction by 2025 of an adaptive signal control technology project along Coors Rio Bravo from Coors to University Boulevard. This project should improve traffic operations along Rio Bravo Boulevard above that seen from traditional signal timing approaches. Although again this is an intersection of two heavily used arterials which generally result in heavy congestion during the peak hours.

The lanes required at Dennis Chavez/Rio Bravo and Coors in 2040 are shown in Table 29.

Table 29 – 2040 Laneage – Rio Bravo and Broadway

EB			WB			NB			SB		
L	T	R	L	T	R	L	T	R	L	T	R
3	3	2	2	3	2	3	3	1	2	3	2

The 2016 Level B Santolina Transportation Master Plan analysis found that under the Santolina scenario, in the AM peak hour there was no changes due to Santolina on the Broadway approaches to the intersection, when compared with the MRCOG Trend scenario. Indeed, the analysis found an improvement in operations for southbound Broadway leaving the intersection. Similarly, in the PM peak hour comparison between the Santolina scenario and the Trend scenario, traffic decreased on Broadway with the Santolina scenario, however there was an increase in the eastbound Rio Bravo traffic levels through the intersection, due to the jobs from Santolina heading outbound to the City. These results are also shown in Appendix A. The estimated construction costs to add the required additional improvements above that anticipated in the 2040 MTP is $1.569 million, including a 30% contingency.

A graphic showing the locations, laneage and LOS for the Dennis Chavez/Rio Bravo and Gun Club improvements is shown in Figure 7.

13. GUN CLUB AND FUTURE UNSER

The 2040 MTP and the Long Range Transportation System shown in Figure 1 anticipates Unser to be extended south of Dennis Chavez to Pajarito Road between 2025 and 2040 as a 2-lane road. The analysis described above in Section III.B.9, Dennis Chavez and Unser, page 33, found that Unser required widening to 2 lanes in each direction. This analysis considered those 2 lanes in evaluating the intersection. As two lanes in each direction is not necessary southbound on Unser, the second southbound lane was converted to a southbound right turn lane at Gun Club. Two lanes northbound through the intersection were required to achieve acceptable levels of service. The level of service for the intersection is shown in Table 30.

Table 30 – 2040 Signalized Results – Gun Club and Future Unser

Signalized Intersections	2040 AM Peak			2040 PM Peak		
	Delay (sec.)	V/C	LOS	Delay (sec.)	V/C	LOS
Gun Club and Future Unser	36.9	0.94	D	34.4	0.89	C

The lanes required at Gun Club and Future Unser in 2040 are shown in Table 31 below.

Table 31 – 2040 Laneage – Gun Club and Future Unser

EB			WB			NB			SB		
L	T	R	L	T	R	L	T	R	L	T	R
2	1	<	1	1	<	1	2	<	1	1	1

The estimated construction costs to add the required additional improvements above that anticipated in the 2040 MTP is $1.444 million, including a 30% contingency.

A graphic showing the locations, laneage and LOS for the Dennis Chavez/Rio Bravo and Gun Club improvements is shown in Figure 7.

14. GUN CLUB AND COORS

The analysis performed in the 2016 Level B Santolina Transportation Master Plan found that under the Santolina scenario, the performance on Coors between Gun Club to south of Coors had poor LOS when compared to the MRCOG Trend scenario. The analysis found that Coors was overcapacity and required three lanes in each direction in order to achieve acceptable level of service. South of Gun Club this additional capacity on Coors was not required to maintain adequate performance. The level of service for the intersection is shown in Table 32.

Table 32 – 2040 Signalized Results – Gun Club and Coors						
Signalized Intersections	2040 AM Peak			2040 PM Peak		
	Delay (sec.)	V/C	LOS	Delay (sec.)	V/C	LOS
Gun Club and Coors	22.8	0.91	C	24.5	0.93	C

The lanes required at Gun Club and Coors in 2040 are shown in Table 33 below.

Table 33 – 2040 Laneage – Gun Club and Coors											
EB			WB			NB			SB		
L	T	R	L	T	R	L	T	R	L	T	R
1	1	<	1	1	1	1	3	1	1	3	1

The estimated construction costs to add the required additional improvements above that anticipated in the 2040 MTP is $1.163 million, including a 30% contingency.

A graphic showing the locations, laneage and LOS for the Dennis Chavez/Rio Bravo and Gun Club improvements is shown in Figure 7.

15. GUN CLUB AND ISLETA

The analysis performed in the 2016 Level B Santolina Transportation Master Plan found that under the Santolina scenario, the performance on Isleta between Gun Club and Coors had poorer LOS when compared to the MRCOG Trend scenario. In addition, the analysis in Section III.B.11, Rio Bravo and Isleta, on page 35, found that two through lanes on Isleta through the Rio Bravo intersection was required to achieve acceptable level of service. However, Table 34 and Table 35 show, acceptable levels of service can be achieved at Gun Club and Isleta with existing laneage, although in the PM peak there is some limited congestion on the eastbound approach of Gun Club. This is considered acceptable due to the limited duration of the congestion (PM peak hour only) and that the overall LOS is acceptable.

Table 34 – 2040 Signalized Results – Gun Club and Isleta

Signalized Intersections	2040 AM Peak			2040 PM Peak		
	Delay (sec.)	V/C	LOS	Delay (sec.)	V/C	LOS
Gun Club and Isleta	25.4	0.93	C	41.2	0.98	D*
*-EB approach LOS E						

The lanes required at Gun Club and Isleta in 2040 are shown in Table 35. The number of lanes are the same as existing conditions, however there is additional vehicle storage lengths required to accommodate expected queues.

Table 35 – 2040 Laneage – Gun Club and Isleta

EB			WB			NB			SB		
L	T	R	L	T	R	L	T	R	L	T	R
1	1	<	-	-	-	1	1	-	-	1	<

The estimated construction costs to add the required additional improvements above that anticipated in the 2040 MTP is $523,000, including a 30% contingency.

A graphic showing the locations, laneage and LOS for the Dennis Chavez/Rio Bravo and Gun Club improvements is shown in Figure 7.

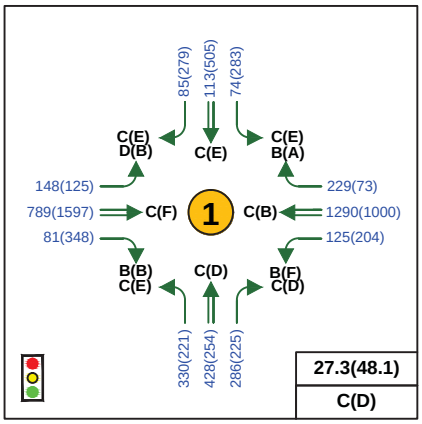

Unser/Dennis Chavez

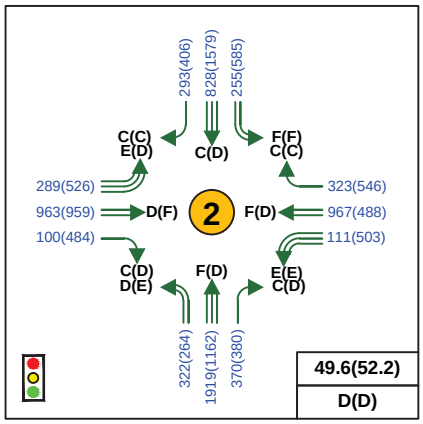

Coors/Dennis Chavez/Rio Bravo

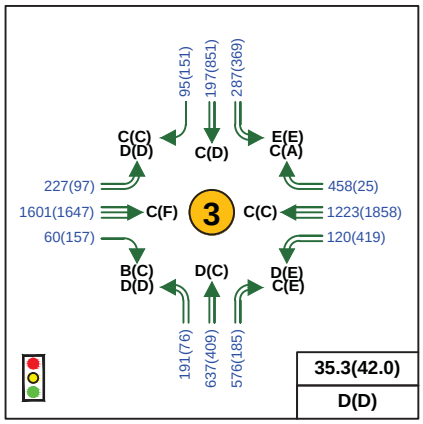

Isleta/Rio Bravo

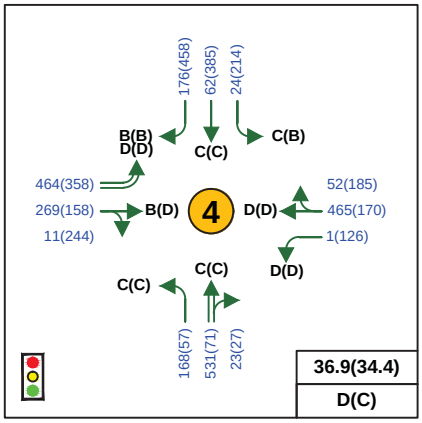

Unser/Gun Club

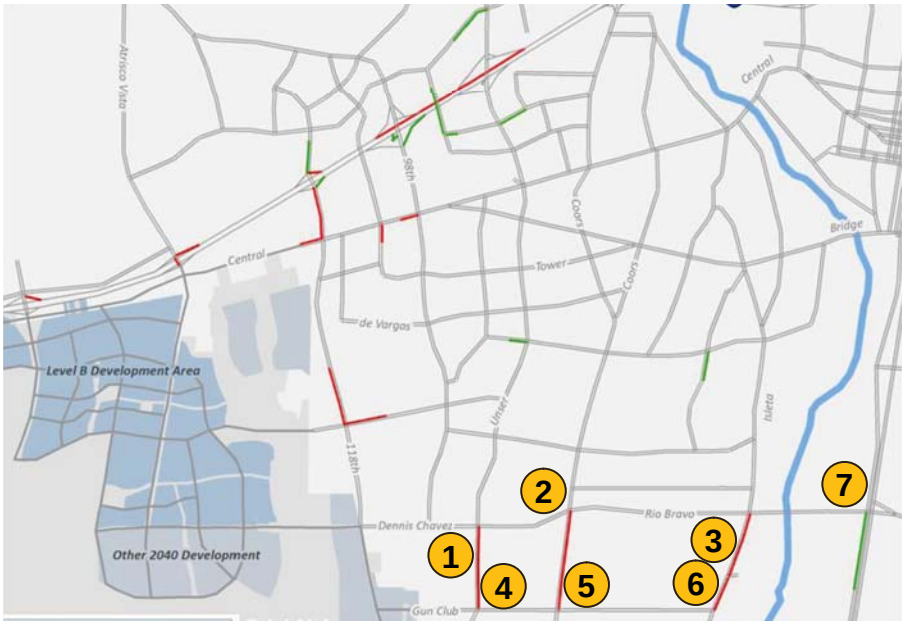

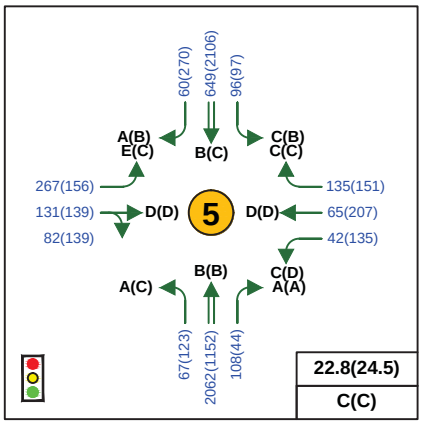

Coors/Gun Club

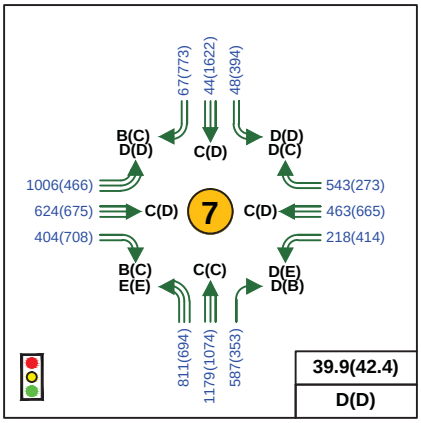

Broadway/Rio Bravo/Dennis Chavez

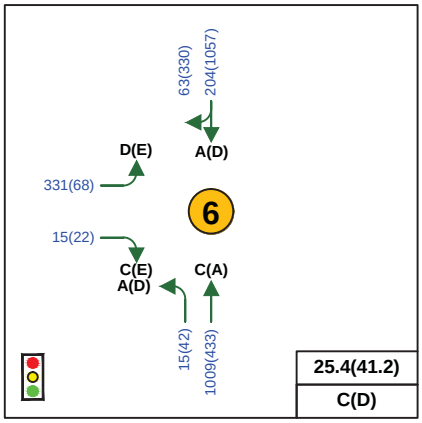

Isleta/Gun Club

LEGEND

Thru Lanes (# as indicated)

Turning Lanes (# as indicated)

1234(1234) Trip Assignment Percentages

N Entering

X Exiting

Bohannan Huston
www.bhinc.com 800.877.5332

Santolina Level B
Albuquerque, New Mexico
Intersections of Interest Analysis

FIGURE 7
2040 Dennis Chavez / Rio Bravo and Gun Club Intersection Improments

C:\Users\cvermillion\appdata\local\temp\AcPublish_10104\F8-20160147-2040DCRBGC.dwg Mar 29, 2016 - 2:20pm

16. ATRISCO VISTA AND WESTBOUND I-40 RAMP

The 2040 MTP does not include any project by 2040 to improve or add capacity at the I-40 Atrisco westbound off-ramp. Therefore, the existing geometry was used to determine additional improvements at the intersection to accommodate Santolina traffic. The level of service for 2040 is shown in Table 36 below. The level of service is comparable to the 2025 level of service as the I-40 and Paseo del Volcan interchange is in place by 2040.

Table 36 – 2040 Signalized Results – Atrisco Vista and WB I-40 Ramp

Signalized Intersections	2040 AM Peak			2040 PM Peak		
	Delay (sec.)	V/C	LOS	Delay (sec.)	V/C	LOS
Atrisco Vista and WB I-40 Ramp	20.8	0.88	C	20.3	0.84	C

The results show that the intersection can achieve acceptable level of service with the same improvements as identified in the 2025 analysis, therefore additional improvements are not required. This is due to the construction of the I-40 and Paseo del Volcan interchange, anticipated to be constructed prior to 2040. A second left turn lane can be striped within the existing pavement width, as it is currently striped out. The lanes required at the intersection are shown in Table 37.

Table 37 – 2040 Laneage – Atrisco Vista and WB I-40 Ramp

EB			WB			NB			SB		
L	T	R	L	T	R	L	T	R	L	T	R
-	-	-	2	1	<	1	2	-	-	2	<

A graphic showing the locations, laneage and LOS is shown in Figure 8. Due to the proximity of the Atrisco Vista interchange with the site, the intersection is included on the graphic that contains the on-site intersections.

17. ATRISCO VISTA AND EASTBOUND I-40 RAMP

The 2040 MTP does not include any project by 2040 to improve or add capacity at the I-40 Atrisco Eastbound off-ramp. Therefore, the existing geometry was used to determine additional improvements at the intersection to accommodate Santolina traffic.
The level of service for 2040 is shown in Table 38 below. The level of service is comparable to the 2025 level of service as the I-40 and Paseo del Volcan interchange is in place by 2040.

Table 38 – 2040 Signalized Results – Atrisco Vista and EB I-40 Ramp

Signalized Intersections	2040 AM Peak			2040 PM Peak		
	Delay (sec.)	V/C	LOS	Delay (sec.)	V/C	LOS
Atrisco Vista and EB I-40 Ramp	15.1	0.88	B	10.8	0.80	B

The results show that the intersection can achieve acceptable level of service with the same improvements as identified in the 2025 analysis. The lanes required at the intersection are shown in Table 39.

However, as will be shown below in Section 0, Atrisco Vista and Central, Atrisco Vista will require three northbound through lanes through the Central Avenue intersection in 2040, currently there are two northbound through lanes. As the existing northbound right turn lane at the eastbound Atrisco Vista eastbound ramp currently extends south to Central, no additional roadway between Central and the eastbound ramp will be required, although improvements to the Atrisco Vista and Central Avenue intersection will be required to allow for the third northbound lane.

Table 39 – 2040 Laneage – Atrisco Vista and EB I-40 Ramp

EB			WB			NB			SB		
L	T	R	L	T	R	L	T	R	L	T	R
>	1	1	-	-	-	-	2	<+1	1	2	-

A graphic showing the locations, laneage and LOS is shown in Figure 8. Due to the proximity of the Atrisco Vista interchange with the site, the intersection is included on the graphic that contains the on-site intersections.

18. ATRISCO VISTA AND CENTRAL AVENUE

The 2040 MTP does not anticipate any improvements to the intersection of Atrisco Vista and Central Avenue, therefore, the existing laneage was used as the starting point in the analysis. Additional turn lanes are required to achieve acceptable level of service, however the existing number of through lanes on Central are adequate provide acceptable overall intersection level of service, although during the PM peak hour here are movements LOS E and F. The level of service for the intersection is shown in Table 40 below.

Table 40 – 2040 Signalized Results – Atrisco Vista and Central

Signalized Intersections	2040 AM Peak			2040 PM Peak		
	Delay (sec.)	V/C	LOS	Delay (sec.)	V/C	LOS
Atrisco Vista and Central	23.0	0.91	C	53.0	1.03	D*
*-EB Left, EB Thru, NB Left LOS E, EB Right, WB Left, NB Thru, and SB Left LOS F						

The analysis found that, although the overall intersection operates at an acceptable level of service, LOS D, there were movements that are forecast to operate at LOS E or F in 2040. This is considered acceptable at this time for the following reasons:

- The intersection overall operates at an acceptable level of service (LOS D)
- The current MRCOG travel demand model used in the analysis has limited transit mode choice options, and transit use is expected to increase in the future, due to the commitment of the region to transit improvements. This is especially true for Central Avenue, given the investment in bus rapid transit (ART) (MPO Project #345.3, $48.6 million (City), Project 345.3, $85 million (City)). Additionally, there is a Bernalillo County project of $4 million (MPO Project # 652.3) for multi-modal improvements in the vicinity of the West Central interchange with I-40.
- The City of Albuquerque has project, MPO Project #175.0 and 66.0 to add ITS equipment to Central Avenue between 2015 and 2025,
- The intersection will continue to be evaluated before actual construction occurs

- The Development Agreement provides mechanisms to provide for appropriate contributions by the Developer toward required improvements, and an initial estimate of the construction cost has been provided.

The lanes required at Atrisco Vista and Central in 2040 are shown in Table 41 .

Table 41 – 2040 Laneage – Atrisco Vista and Central

EB			WB			NB			SB		
L	T	R	L	T	R	L	T	R	L	T	R
1	2	1	3	2	1	1	3	2	2	3	1

The estimated construction costs to add the required additional improvements above that anticipated in the 2040 MTP is $1.292 million, including a 30% contingency. Cost estimates for Atrisco Vista south of Central Avenue will be discussed in Section IV, On-Site Analysis, beginning on page 50, and are included in the arterials and collector street estimate for Santolina.

A graphic showing the locations, laneage and LOS is shown in Figure 8. Due to the proximity of Atrisco Vista with the site, the intersection is included on the graphic that contains the on-site intersections.

19. FUTURE PASEO DEL VOLCAN AND WESTBOUND I-40 RAMP

The 2040 MTP anticipates a new interchange with I-40 at future Paseo del Volcan between 2025 and 2040. MPO Project #719.2. The project has been through an initial NMDOT study process and the location of the interchange has been established and right-of-way acquisition is ongoing with the NMDOT (MPO Project #70.1). Other efforts are ongoing in order to move up construction of the interchange, but these have not been completed and are not official MRCOG policy at this time. The existing laneage of the interchange will be identified in the final NMDOT studies to be conducted when the interchange begins moving forward.

The 2040 MTP also has MPO Project #719.3, the construction of a two-lane Paseo del Volcan roadway south of I-40 to serve Santolina.

The level of service required to achieve acceptable level of service in 2040 is shown in Table 42

Table 42 – 2040 Signalized Results – Future Paseo del Volcan and WB I-40 Ramp						
Signalized Intersections	**2040 AM Peak**			**2040 PM Peak**		
	Delay (sec.)	**V/C**	**LOS**	**Delay (sec.)**	**V/C**	**LOS**
Future Paseo del Volcan and WB I-40 Ramp	32.0	0.93	C	16.0	0.82	B

The results show that the intersection can achieve acceptable level of service with minimal improvement. The configuration of the intersection and the improvements for the interchange will be determined during the final NMDOT studies for the interchange. The lanes required at the intersection to achieve the above level of service is shown in Table 43.

Table 43 – 2040 Laneage – Future Paseo del Volcan and WB I-40 Ramp											
EB			WB			NB			SB		
L	T	R	L	T	R	L	T	R	L	T	R
-	-	-	2	1	<	1	1	-	-	1	1

As mentioned above, the 2040 MTP estimates the cost of the 118th Street interchange with I-40 at $15.4 million. It is expected the NMDOT interchange study, when conducted, will design the interchange for the 20-year traffic projection at the time of the study. Therefore it is assumed the interchange will accommodate the expected laneage presented in Table 43.

A graphic showing the locations, laneage and LOS is shown in Figure 8. Due to the proximity of the Paseo del Volcan interchange with the site, the intersection is included on the graphic that contains the on-site intersections.

20. FUTURE PASEO DEL VOLCAN AND EASTBOUND I-40 RAMP

The level of service for the Paseo del Volcan eastbound ramp for 2040 is shown in Table 44. Again, the final geometry will be determined by the NMDOT study process during the interchange study.

Table 44– 2040 Signalized Results Future Paseo del Volcan and EB I-40 Ramp						
Signalized Intersections	**2040 AM Peak**			**2040 PM Peak**		
	Delay (sec.)	**V/C**	**LOS**	**Delay (sec.)**	**V/C**	**LOS**
Future Paseo del Volcan and EB I-40 Ramp	16.6	0.93	B	6.5	0.65	A

The lanes required at the intersection to achieve acceptable level of service is shown in Table 45.

Table 45 – 2040 Laneage – Future Paseo del Volcan and EB I-40 Ramp											
EB			WB			NB			SB		
L	T	R	L	T	R	L	T	R	L	T	R
1	1	<	-	-	-	-	2	<+1	1	2	-

As mentioned above, the 2040 MTP estimates the cost of the 118th Street interchange with I-40 at $15.4 million. It is expected the NMDOT interchange study, when conducted, will design the interchange for the 20-year traffic projection at the time of the study. Therefore it is assumed the interchange will accommodate the expected laneage presented in Table 45.

A graphic showing the locations, laneage and LOS is shown in Figure 8. Due to the proximity of the Paseo del Volcan interchange with the site, the intersection is included on the graphic that contains the on-site intersections.

21. WESTBOUND I-40 BETWEEN UNSER BOULEVARD AND 98TH STREET/ARROYO VISTA INTERCHANGES

The analysis performed for the 2016 Level B Santolina Transportation Master Plan showed an increase in v/c ratio on westbound I-40 between the Unser Boulevard and 98th Street/Arroyo Vista interchanges. As the increase in v/c did not result in the interstate being overcapacity, no improvements have been identified for this portion of I-40. See the graphics in Appendix A.

22. EASTBOUND I-40 BETWEEN FUTURE 118TH STREET AND UNSER BOULEVARD INTERCHANGES

The analysis performed for the 2016 Level B Santolina Transportation Master Plan showed an increase in v/c ratio on eastbound I-40 between the future 118 Street interchange and the Unser Boulevard interchanges. As the increase in v/c ratio did result in overcapacity on the interstate between the 98th Street interchange ramps, an additional lane of I-40 was included in the cost estimate. This additional lane, for a length of approximately one mile, was estimated at $2.96 million.

IV. ON-SITE ANALYSIS

The balance of the locations where traffic levels are expected to require improvements above that anticipated by the traffic analysis performed for the 2015 Level B Santolina Transportation Master Plan are locations within the boundaries of the Santolina Master Plan area, and are considered on-site intersections. These improvements will be predominantly "project infrastructure" as defined by the Development Agreement, or infrastructure that solely benefits the Santolina development. "System infrastructure" is infrastructure that is anticipated to have benefit to both Santolina and, in the context of roadway improvements, benefits the regional traffic.

A. ON-SITE IMPROVEMENTS BY 2025

1. 2025 ON-SITE ROADWAY COST SUMMARY

The traffic analysis performed for the 2016 Level B Santolina Transportation Master Plan found that the assumed infrastructure within the boundaries of the Master Plan area. Therefore, individual intersection geometry within the Master Plan boundaries was not evaluated at this time, and the costs of the on-site infrastructure was estimated based on a per-mile estimate of the anticipated roadway typical section (number of lanes, sidewalk, bike lanes, etc.) as identified in the 2016 Level B Santolina Transportation Master Plan.

The total cost estimated for the 2025 roadway network is summarized below:

- Atrisco Vista widening $14.342 million
- Dennis Chavez widening $10.472 million
- Internal roadways $73.845 million
- Total 2025 Santolina roadways (similar to 2040 MTP MPO Project #719.0) includes all of the above $98.659 million

B. ON-SITE IMPROVEMENTS BY 2040

The 2016 Level B Santolina Transportation Master Plan identified four locations within the boundaries of the Santolina Master Plan area the link analysis identified overcapacity conditions which warranted additional evaluation:

Paseo del Volcan and the I-40 South Frontage Road

Atrisco Vista and the Parallel Road to the Frontage Road

Atrisco Vista and Future Gibson

Dennis Chavez and Loop Road

Each location will be discussed in further detail below, similarly to the off-site locations discussed above in Section III.

1. FUTURE PASEO DEL VOLCAN AND I-40 FRONTAGE ROAD

The level of service for the Paseo del Volcan intersection with the I-40 Frontage Road for 2040 is shown in Table 46 below. As mentioned previously, the 2040 MTP has MPO Project #719.3 for $11.6 million, which anticipates the construction of a two-lane Paseo del Volcan roadway south of I-40 to serve Santolina. Due to the proximity of this intersection to the Paseo del Volcan interchange, the final geometry will be determined by the NMDOT study process during the Paseo del Volcan interchange study. During that study the location of the intersection is anticipated to move to the south to accommodate acceptable intersection spacing along future Paseo del Volcan. Right-of-way has been reserved to allow for the realignment of the Frontage Road in the future.

Per the request of the NMDOT, no land uses within the boundaries of the Santolina Master Plan area have direct access to the Frontage Road in the Santolina travel demand model used in the analysis. In addition, the Frontage Road was maintained as one-lane in each direction.

The analysis finds the overall intersection LOS can be acceptable at LOS D overall, however movements in the AM and PM peak hour are LOS E and/or LOS F. The addition of left turn lanes on the Frontage Road will eliminate the LOS F in the PM peak hour, and only the eastbound left turn in the PM peak hour, employment traffic returning to Albuquerque, will operate at LOS E.

Table 46 – 2040 Signalized Results Future Paseo del Volcan and I-40 Frontage Road

Signalized Intersections	2040 AM Peak			2040 PM Peak		
	Delay (sec.)	V/C	LOS	Delay (sec.)	V/C	LOS
Future Paseo del Volcan and EB I-40 Ramp	33.9	0.95	C*	49.9	1.03	D**

*-WB LOS E
**-EB and SB Let LOS E, NB Thru/Right LOS F

The lanes required at the intersection to achieve the level of service above is shown in Table 47. The estimated construction cost will discussed in the 2040 On-Site Roadway Cost Summary Section, IV.B.5, on page 54.

Table 47 – 2040 Laneage – Future Paseo del Volcan and I-40 Frontage Road

EB			WB			NB			SB		
L	T	R	L	T	R	L	T	R	L	T	R
>	1	<	>	1	<	1	2	<	1	2	<

A graphic showing the locations, laneage and LOS is shown in Figure 8.

2. ATRISCO VISTA AND PARALLEL ROAD

The level of service for the Atrisco Vista and Parallel Road for 2040 is shown in Table 48 below. The Parallel Road was requested by the NMDOT and Bernalillo County to parallel the I-40 south Frontage Road to provide a more desirable roadway to attract Santolina traffic internal to the development, instead of using the Frontage Road.

The analysis finds the overall intersection LOS is acceptable at LOS A and B. This is due to the intersection being a T-intersection and Atrisco Vista having three lanes in each direction, however having just two lanes in each direction on Atrisco Vista would lead to movements operating at LOS F.

Table 48 – 2040 Signalized Results Atrisco Vista and Parallel Road

Signalized Intersections	2040 AM Peak			2040 PM Peak		
	Delay (sec.)	V/C	LOS	Delay (sec.)	V/C	LOS
Atrisco Vista and Parallel Road	9.4	0.80	A	14.4	0.89	B

The lanes required at the intersection to achieve the level of service above is shown in Table 49. The estimated construction cost will discussed in the 2040 On-Site Roadway Cost Summary Section, IV.B.5, on page 54.

Table 49 – 2040 Laneage – Atrisco Vista and Parallel Road											
EB			WB			NB			SB		
L	T	R	L	T	R	L	T	R	L	T	R
2	-	1	-	-	-	1	3	-	-	3	1

A graphic showing the locations, laneage and LOS is shown in Figure 8.

3. ATRISCO VISTA AND FUTURE GIBSON

The level of service for the Atrisco Vista and future Gibson intersection for 2040 is shown in Table 50 below. The intersection can achieve overall acceptable levels of service with anticipated laneage on Atrisco Vista and future Gibson.

Table 50 – 2040 Signalized Results Atrisco Vista and Future Gibson						
Signalized Intersections	**2040 AM Peak**			**2040 PM Peak**		
	Delay (sec.)	**V/C**	**LOS**	**Delay (sec.)**	**V/C**	**LOS**
Atrisco Vista and Future Gibson	34.2	0.96	C	24.8	0.91	C

The lanes required at the intersection to achieve the level of service above is shown in Table 51. The estimated construction cost will discussed in the 2040 On-Site Roadway Cost Summary Section, IV.B.5, on page 54.

Table 51 – 2040 Laneage – Atrisco Vista and Future Gibson											
EB			WB			NB			SB		
L	T	R	L	T	R	L	T	R	L	T	R
2	2	1	2	2	1	1	3	1	1	3	1

A graphic showing the locations, laneage and LOS is shown in Figure 8.

4. DENNIS CHAVEZ AND LOOP ROAD

The level of service for the Dennis Chavez and Loop Road intersection for 2040 is shown in Table 52. The overall intersection can achieve LOS D under the expected laneage, however three movements operate at LOS E. Two of the movements have very low volume, less than 6 vehicles for either movement, so LOS E is acceptable.

The other movement LOS E, the eastbound through movement is the PM peak hour, will improve as future phases construct the Gun Club Road extension up the escarpment, as anticipated in the Level A Master Plan roadway network.

Table 52 – 2040 Signalized Results Dennis Chavez and Loop Road

Signalized Intersections	2040 AM Peak			2040 PM Peak		
	Delay (sec.)	V/C	LOS	Delay (sec.)	V/C	LOS
Dennis Chavez and Loop Road	22.9	0.89	C*	37.0	0.98	D**

*-NB Left LOS E
**-EB Thru/Right, NB Left LOS E

The lanes required at the intersection to achieve the level of service above is shown in Table 53. The estimated construction cost will discussed in the 2040 On-Site Roadway Cost Summary Section, IV.B.5, on page 54.

Table 53 – 2040 Laneage – Dennis Chavez and Loop Road

EB			WB			NB			SB		
L	T	R	L	T	R	L	T	R	L	T	R
1	3	<	1	3	2	1	1	<	3	1	<

A graphic showing the locations, laneage and LOS is shown in Figure 8.

5. 2040 ON-SITE ROADWAY COST SUMMARY

The total cost estimated for the 2040 roadway network is summarized below:

- Atrisco Vista widening $28.4 million
- Dennis Chavez widening $5.5 million
- Gibson Extension $17.6 million
- Internal roadways $26.6 million
- Total 2040 Santolina roadways (similar to 2040 MTP MPO Project #719.1) includes all of the above $78.1 million
- Paseo del Volcan (similar to 2040 MTP MPO Project #719.3) $8.1 million
- Total 2040 $86.2 million

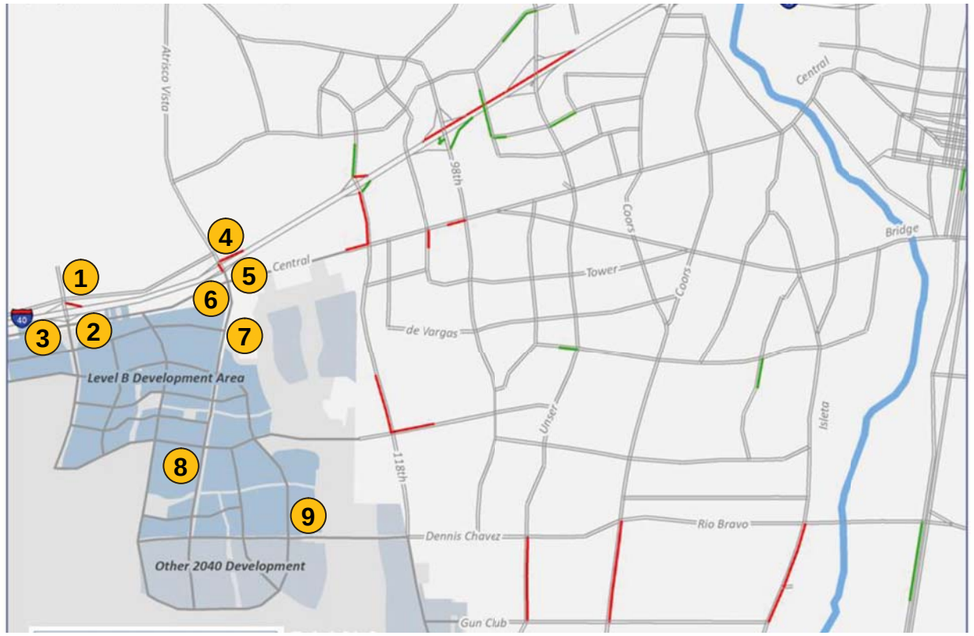

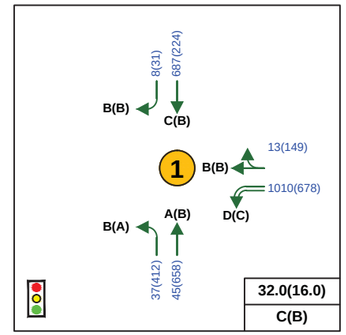

Paseo del Volcan/40 WB

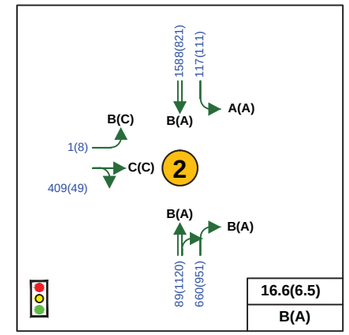

Paseo del Volcan/I-40 EB

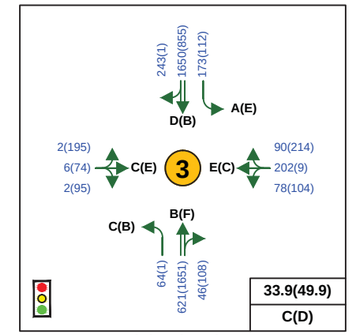

Paseo del Volcan/Frontage

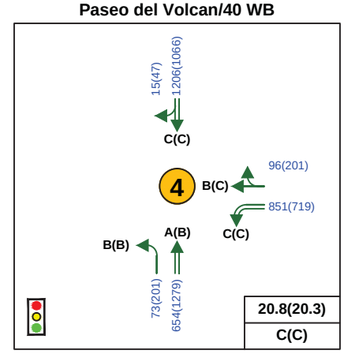

Atrisco Vista/I-40 WB

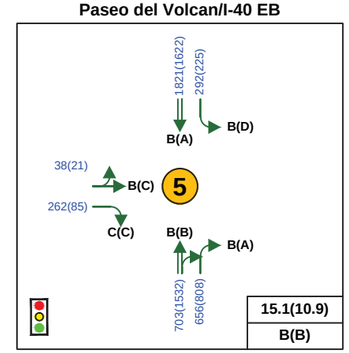

Artisco Vista/I-40 EB

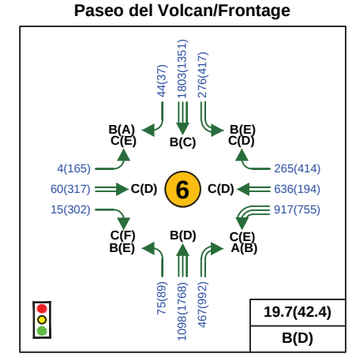

Atrisco Vista/Cental

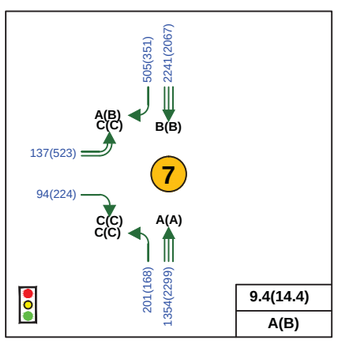

Atrisco Vista/Parallel Road

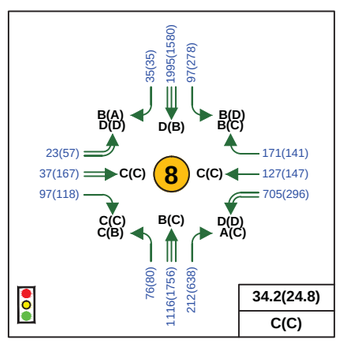

Atrisco Vista/Gibson

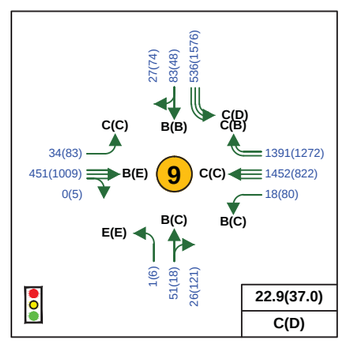

Loop Road/Dennis Chavez

LEGEND

- Thru Lanes (# as indicated)
- Turning Lanes (# as indicated)
- 1234(1234) Trip Assignment Percentages
- N Entering
- X Exiting

Bohannan Huston
www.bhinc.com 800.877.5332

Santonlina Level B
Albuquerque, New Mexico
Intersections of Interest Analysis

FIGURE 8
2040 On-Site and Atrisco Vista
Intersection Improvements

P:\20160147\TRANS\Study\Report-Production\Report Figures\F5-20160147-2040_On_Site_AV.dwg Mar 29, 2016 - 2:26pm

V. SUMMARY

The 2016 Level B Santolina Transportation Master Plan identified locations where the forecast traffic operations under the Santolina scenario are anticipated to be more congested than under the MRCOG Trend scenario. These locations were evaluated to determine the improvements required to achieve acceptable levels of service at the identified locations. The configuration of the roadways prior to the improvements were assumed to be that in the 2040 MTP Appendix A Project Listing, or the existing geometry, if the locations were not identified for improvement in the 2040 MTP.

The locations were evaluated for 2025 and 2040, as identified in the 2016 Level B Santolina Transportation Master Plan.

A. OFF-SITE LOCATIONS

1. 2025 OFF-SITE SUMMARY

The 2016 Level B Santolina Transportation Master Plan analysis found that in 2025, the only off-site location that required improvement was the Atrisco Vista ramps with I-40. The recent reconstruction of the interchange constructed sufficient infrastructure to accommodate the expected traffic, although minor, striping modifications are required. Due to the minor nature of the required improvements, the improvements can be considered during the normal development process, and funding through the MTP or TIP is not necessary.

2. 2040 OFF-SITE SUMMARY

The analysis identified 22 locations where the changes in traffic volumes resulted in a change in congestion where improvements were requested to be evaluated. These locations are spread throughout the area, generally from Coors Boulevard west to Atrisco Vista, and from Gun Club on the south, and Interstate 40 on the north. These locations are considered to system infrastructure, as the roadways serve both Santolina and regional traffic. Therefore, the costs of these improvements are anticipated to be shared between Santolina and public funding, per the Level A and Level B Development Agreement.

The total estimated cost for the construction of the anticipated improvements is $64.651 million, with both private and public funding to be used for construction.

B. ON-SITE LOCATIONS

1. 2025 ON-SITE SUMMARY

The traffic analysis performed for the 2016 Level B Santolina Transportation Master Plan found that the assumed infrastructure within the boundaries of the Master Plan area. Therefore, individual intersection geometry within the Master Plan boundaries was not evaluated at this time, and the costs of the on-site infrastructure was estimated based on a per-mile estimate of the anticipated roadway typical section (number of lanes, sidewalk, bike lanes, etc.) as identified in the 2016 Level B Santolina Transportation Master Plan.

The total cost estimated for the 2025 roadway network is summarized below:

- Atrisco Vista widening $14.342 million
- Dennis Chavez widening $10.472 million
- Internal roadways $73.845 million
- Total 2025 Santolina roadways (similar to 2040 MTP MPO Project #719.0) includes all of the above $98.659 million

As with the above off-site infrastructure, a portion of the above improvements will also benefit regional traffic and will be considered system infrastructure per the terms of the Development Agreement. This means both private and public funds could be used in the construction of the above roadways, dependent on the amount of Santolina traffic using each roadway.

2. 2040 ON-SITE SUMMARY

Similar to the 2025 analysis, on-site infrastructure required and the construction costs for 2040 was also determined. The total cost estimated for the 2040 roadway network is summarized below:

- Atrisco Vista widening $28.4 million
- Dennis Chavez widening $5.5 million
- Gibson Extension – up escarpment to Loop Rd $9.22 million
- Gibson Extension – Loop Road to Atrisco Vista $2.65 million
- Gibson Extension –west of Atrisco Vista $5.73 million
- Internal roadways $26.6 million
- Total 2040 Santolina roadways (similar to 2040 MTP MPO Project #719.1) includes all of the above $78.1 million

- Paseo del Volcan (similar to 2040 MTP MPO Project #719.3) $8.1 million
- Total 2040 including Paseo del Volcan $86.2 million

As with the above off-site infrastructure, a portion of the above improvements will also benefit regional traffic and will be considered system infrastructure per the terms of the Development Agreement. This means both private and public funds could be used in the construction of the above roadways, dependent on the amount of Santolina traffic using each roadway.

APPENDIX A
2016 LEVEL B SANTOLINA TRANSPORTATION MASTER PLAN TECHNICAL APPENDIX EXCERPTS

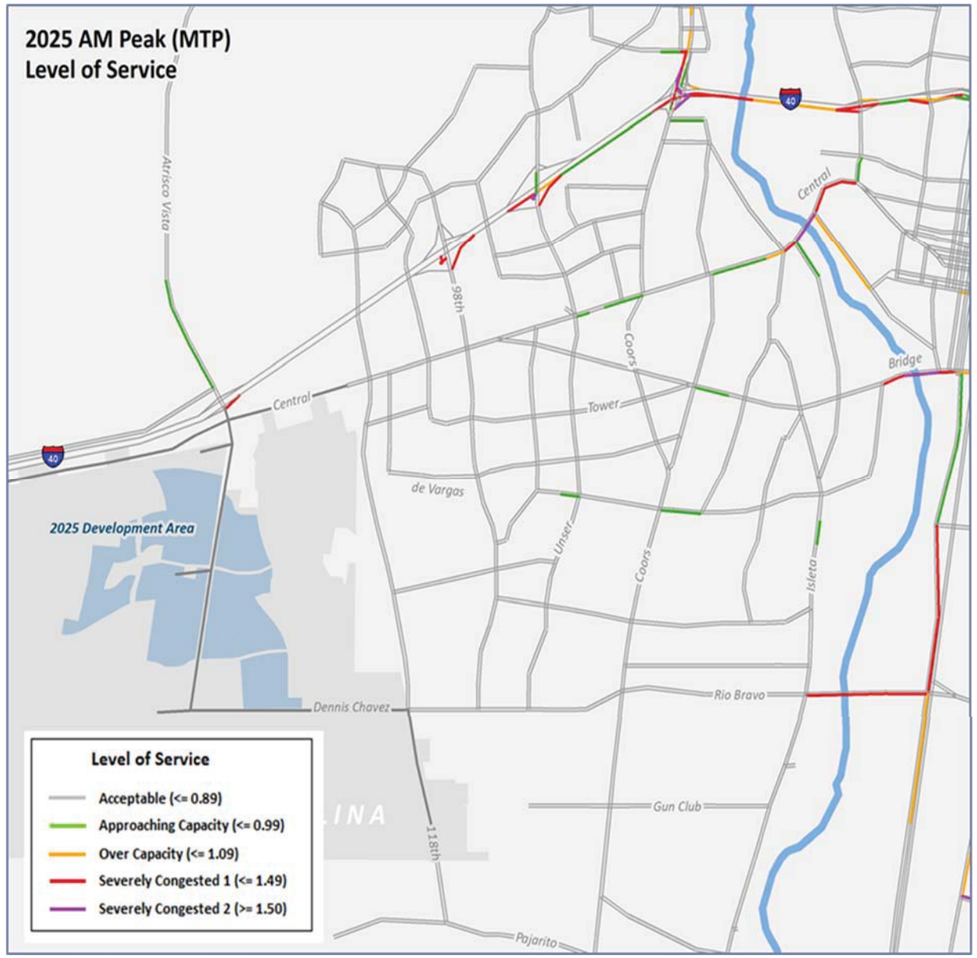

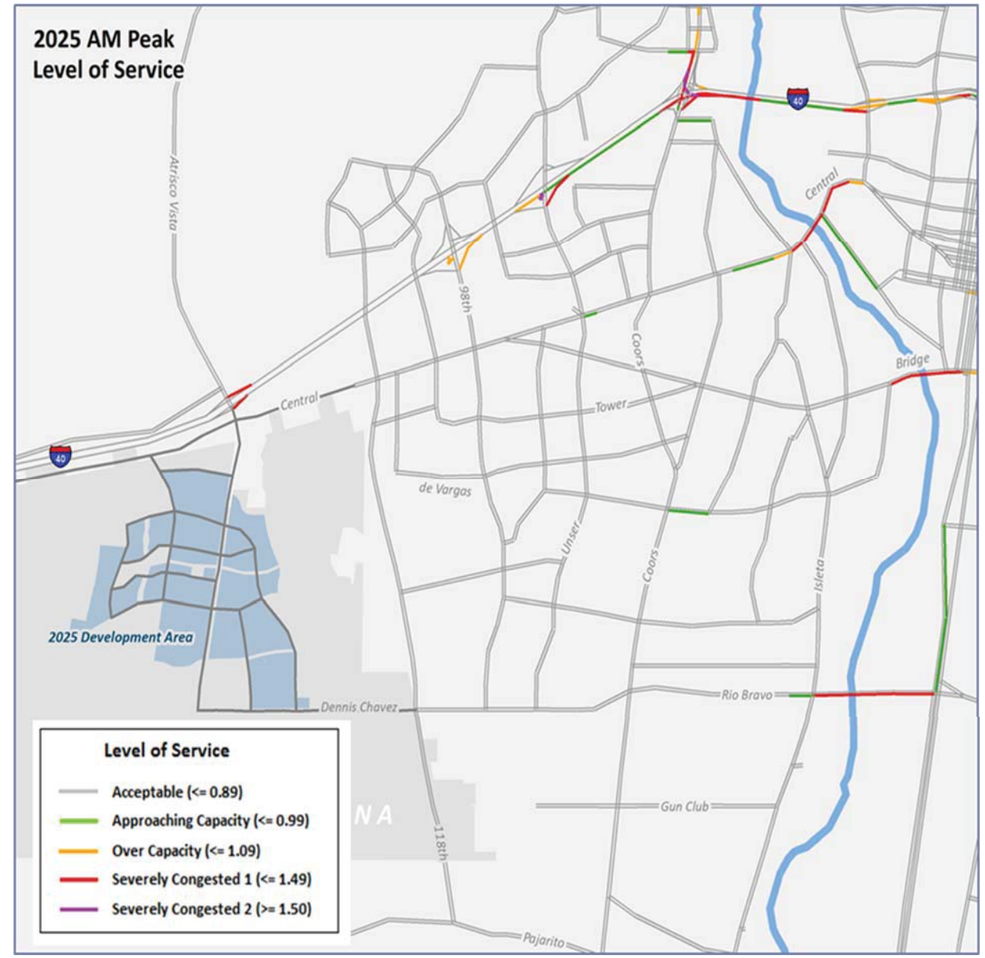

Figure 29 – Forecast Traffic Volume to Capacity Ratio Comparison to MRCOG MTP
AM Peak Hour – 2025

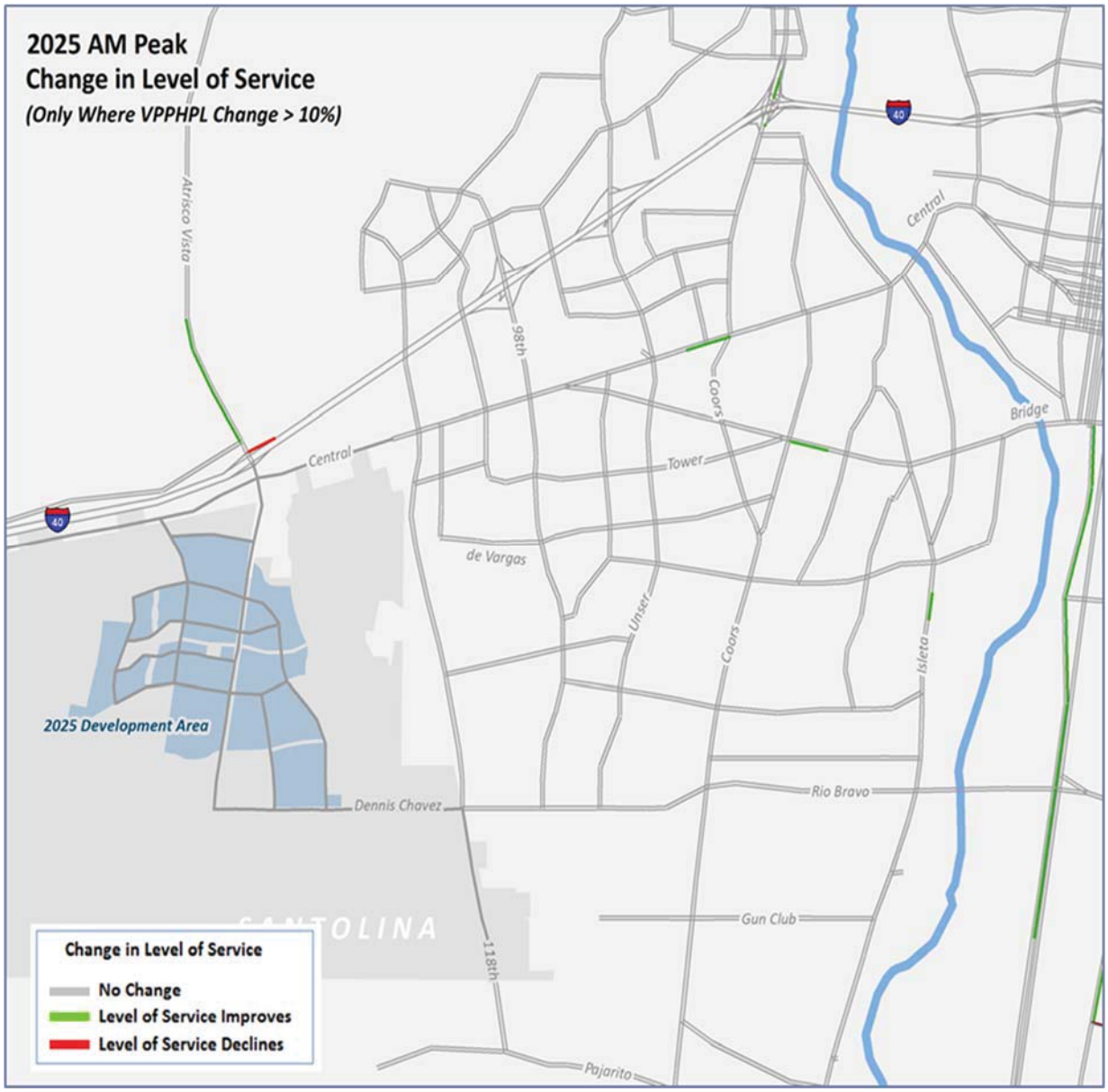

Figure 30 – Change in Volume-to-Capacity Ratio from MRCOG MTP AM Peak Hour – 2025

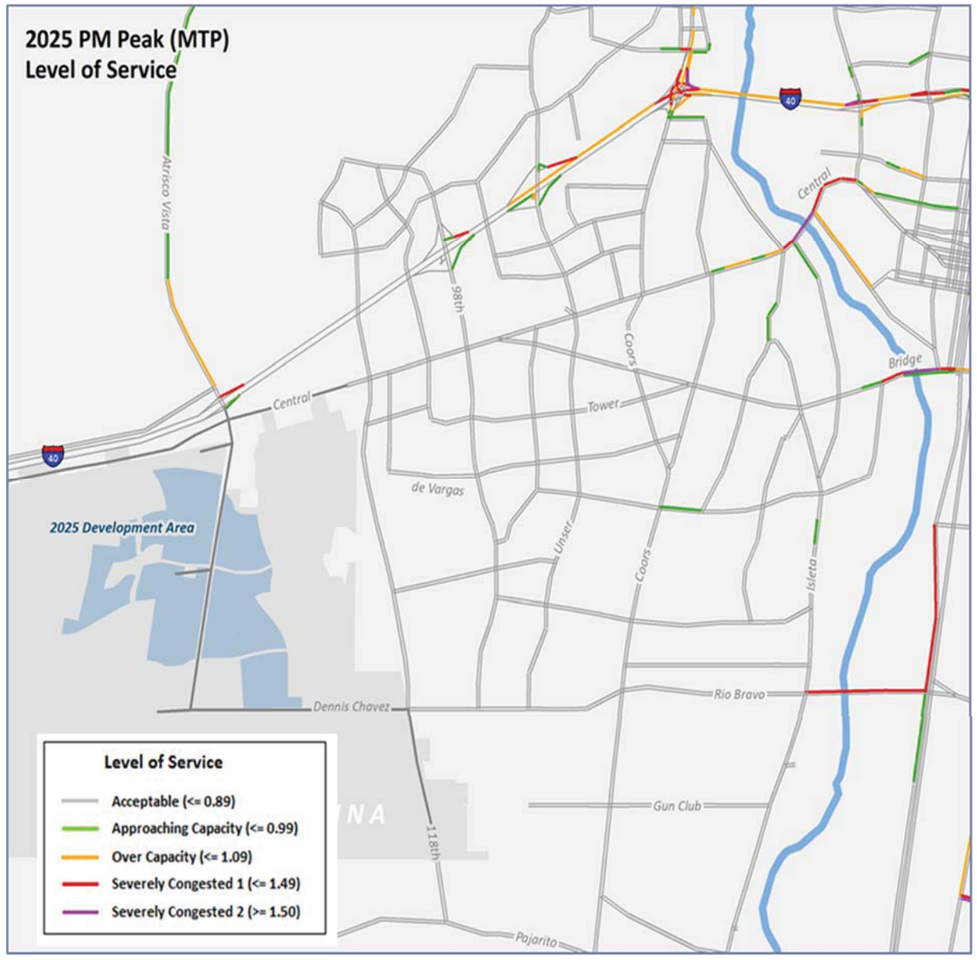

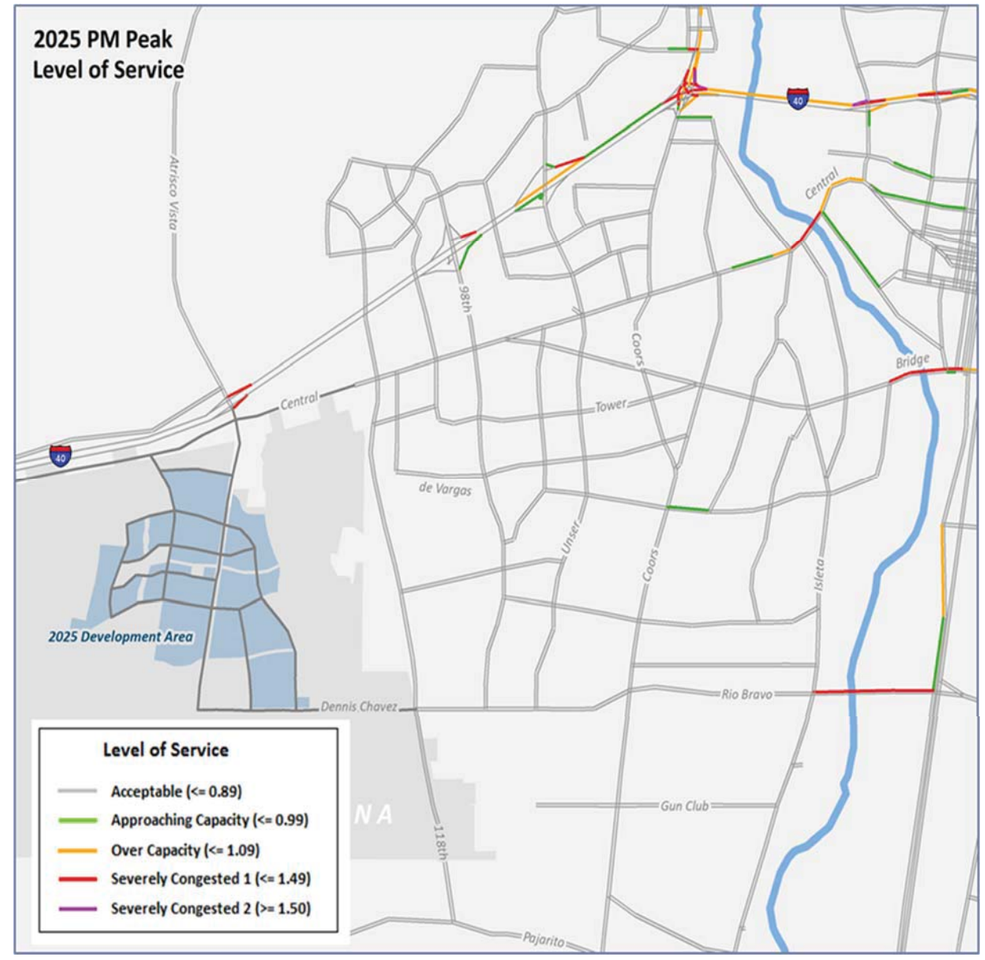

Figure 31 – Forecast Traffic Volume to Capacity Ratio Comparison to MRCOG MTP PM Peak Hour – 2025

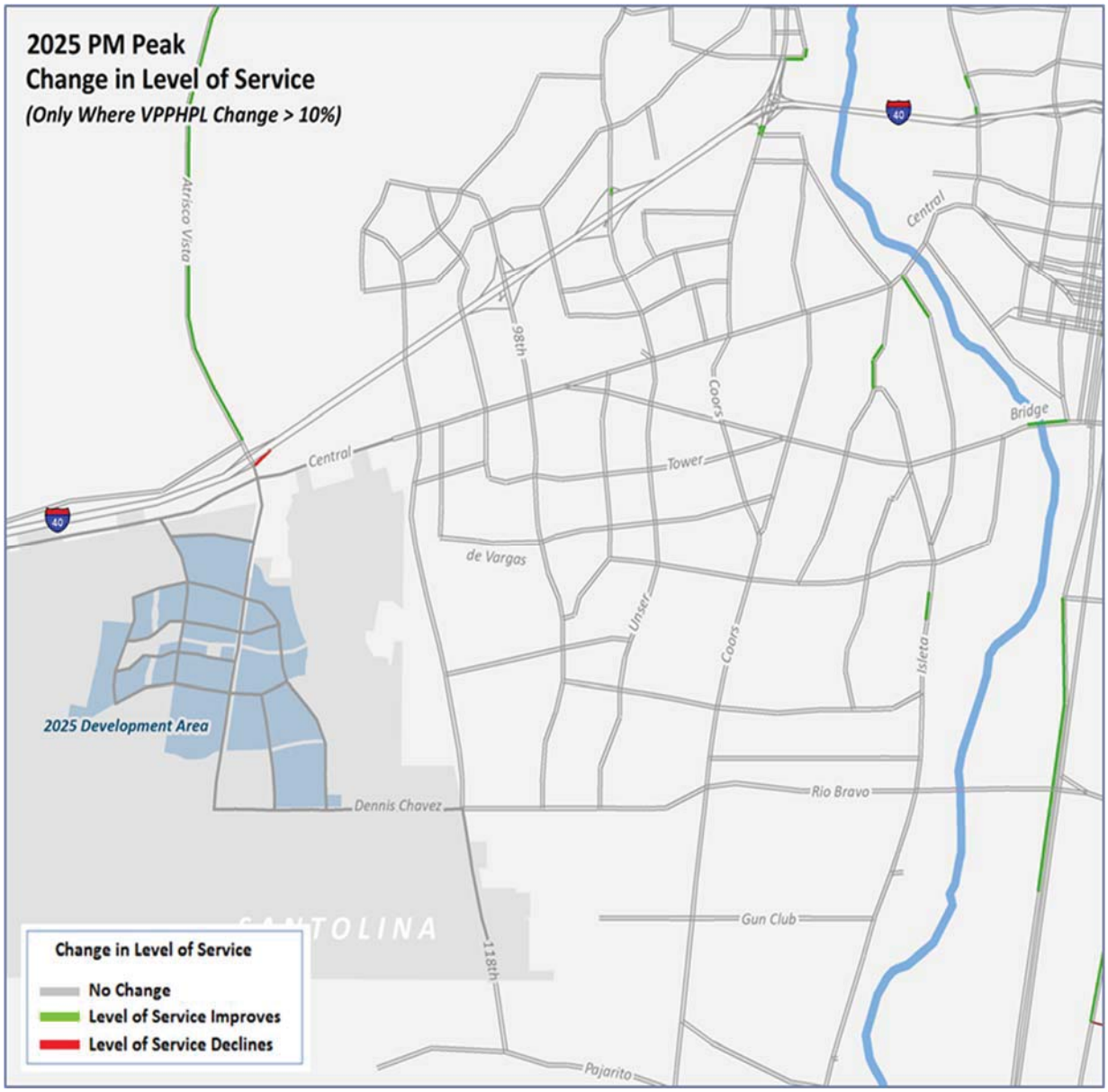

Figure 32 – Change in Volume-to-Capacity Ratio from MRCOG MTP PM Peak Hour – 2025

2. 2040 COMPARISON TO MRCOG 2040 MTP RESULTS

A side-by-side comparison of the volume-to-capacity ratio for the 2040 AM peak hour is shown in Figure 33, with the change in level of service from the MRCOG 2040 MTP volume-to-capacity shown in Figure 34. Similar graphics for the 2040 PM peak hour is shown in Figure 35 and Figure 36.

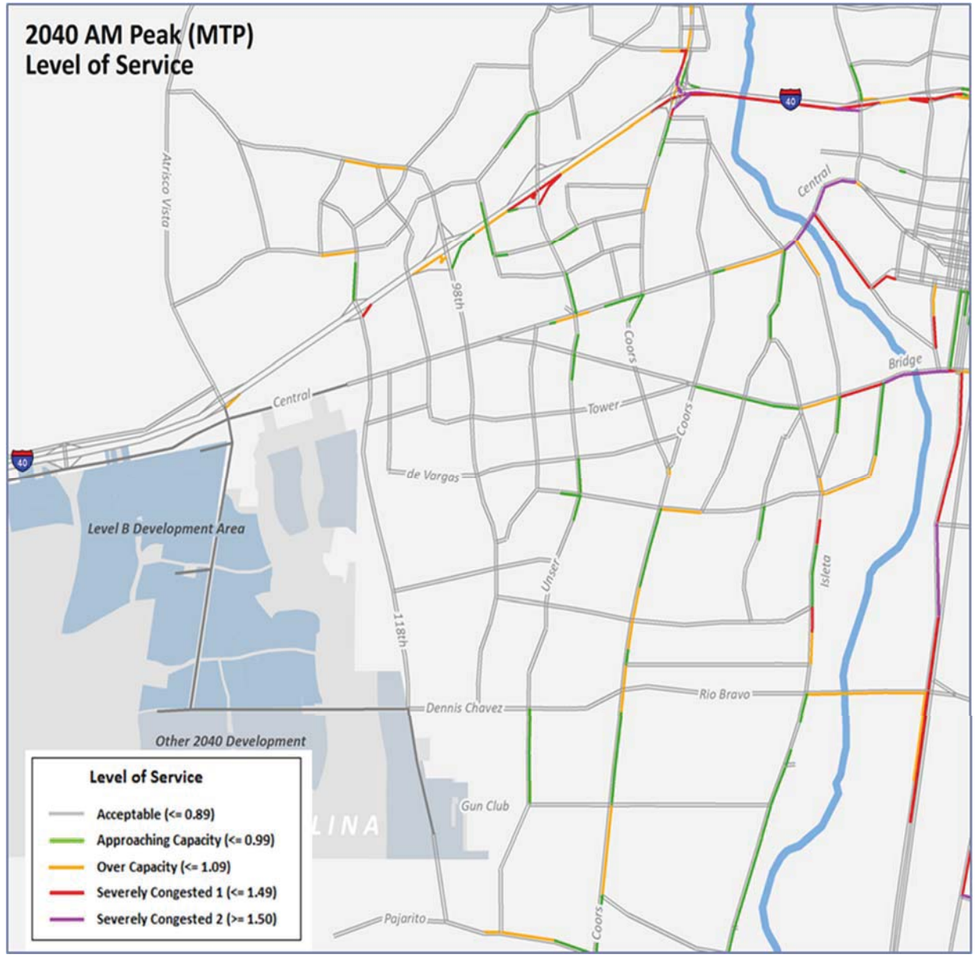

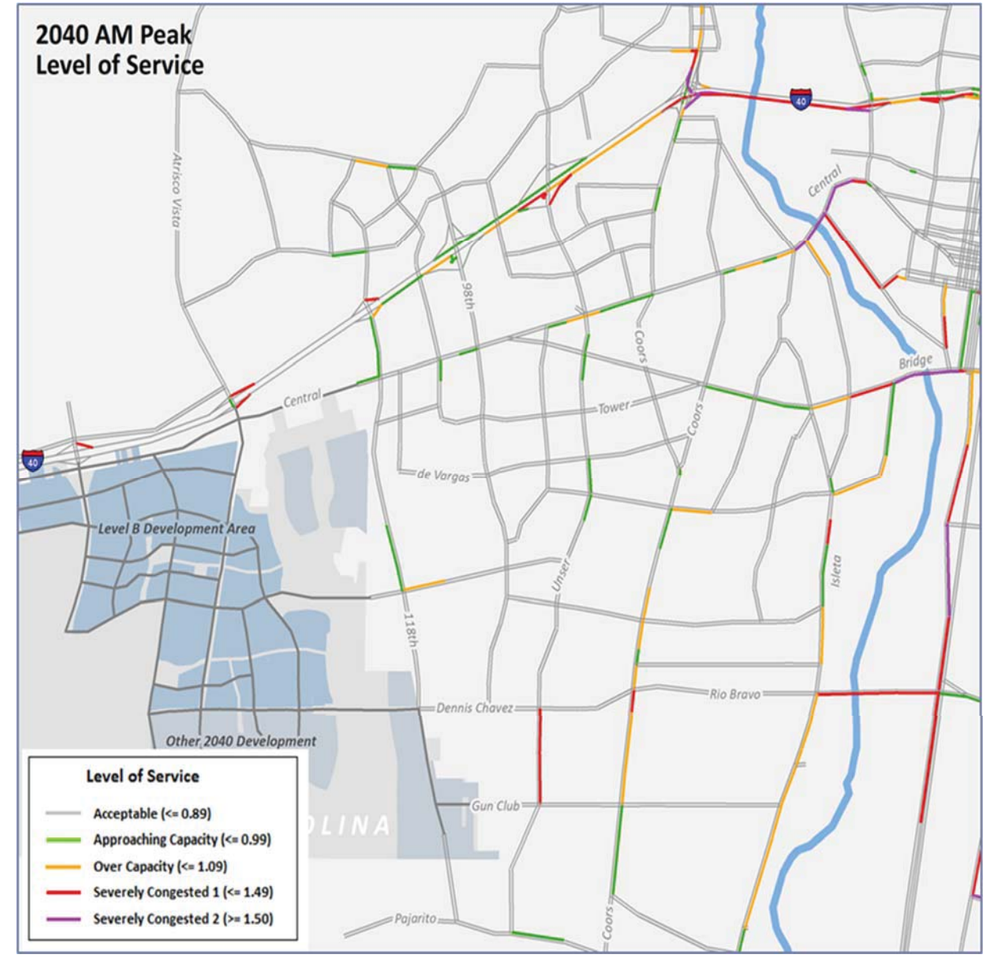

Figure 33 – Forecast Traffic Volume to Capacity Ratio Comparison to MRCOG MTP AM Peak Hour – 2040

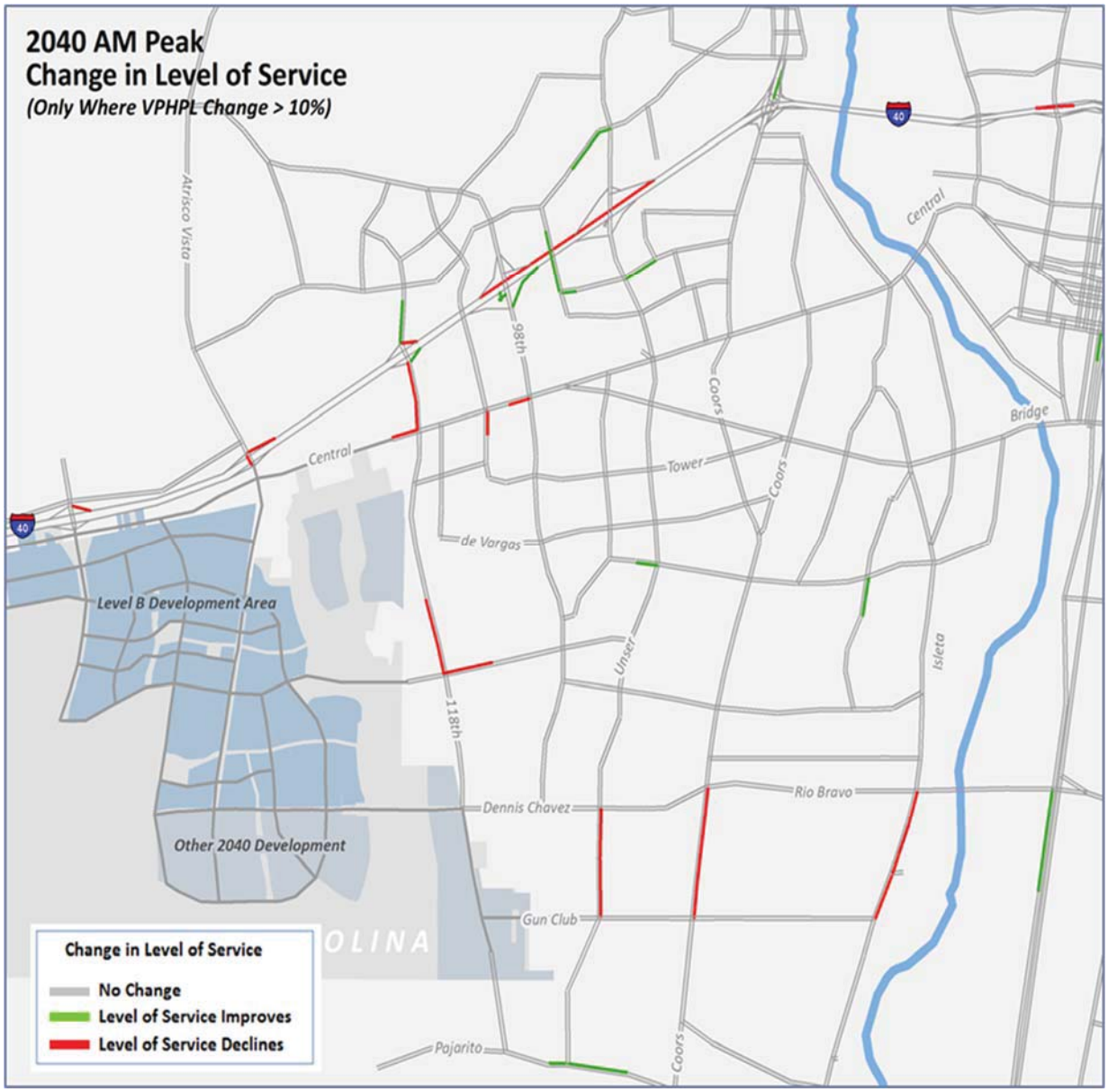

Figure 34 – Change in Volume-to-Capacity Ratio from MRCOG MTP AM Peak Hour – 2040

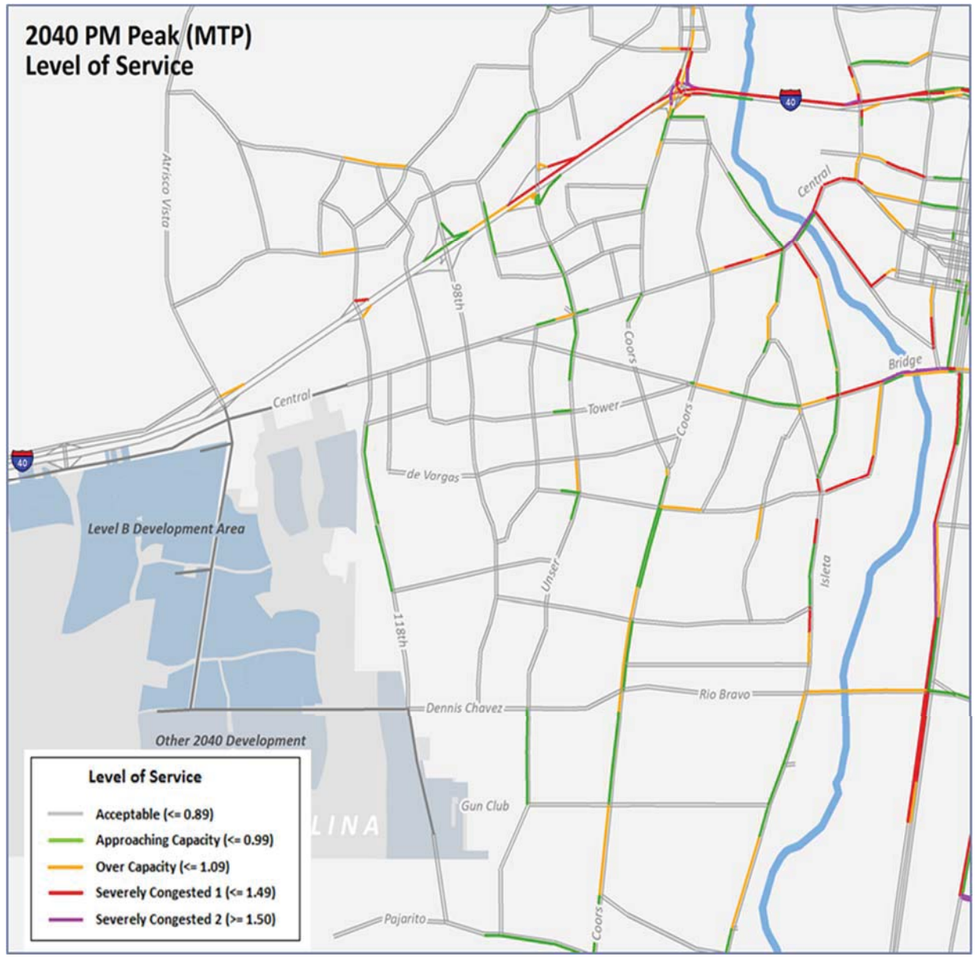

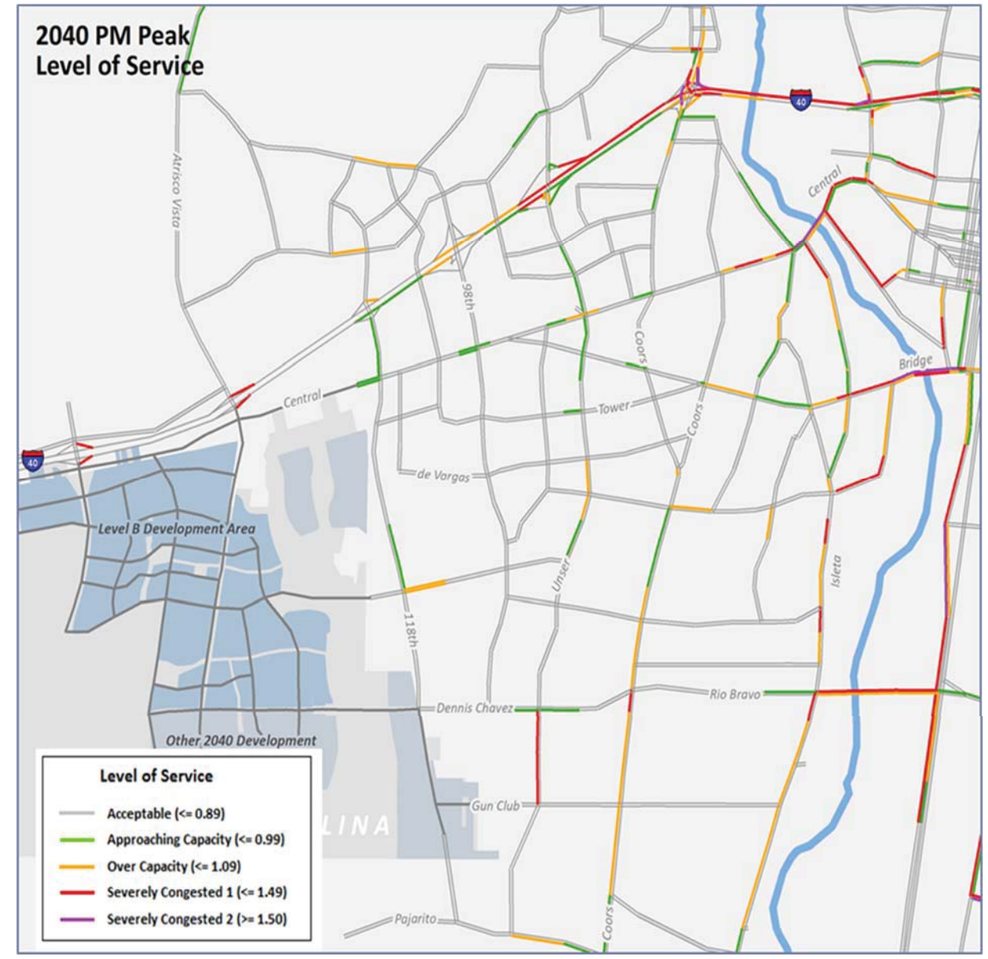

Figure 35 – Forecast Traffic Volume to Capacity Ratio Comparison to MRCOG MTP
PM Peak Hour – 2040

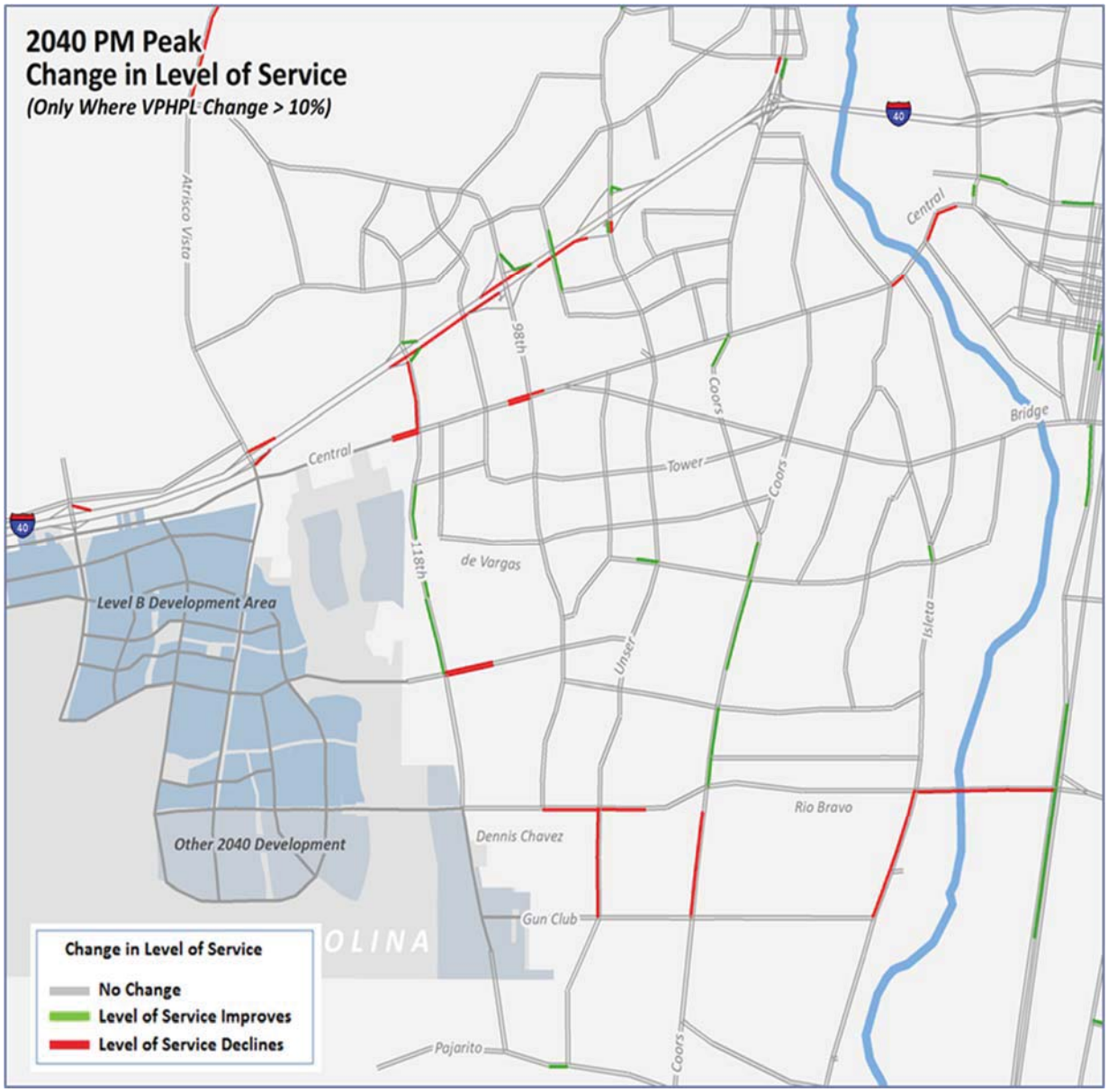

Figure 36 – Change in Volume-to-Capacity Ratio from MRCOG MTP PM Peak Hour – 2040

As with the 2025 comparison, the overall performance between the 2040 MTP and Santolina scenarios are similar, with congestion in many of the same locations, as shown in Figure 33 (AM) and Figure 35 (PM). The changes volume-to-capacity ration, shown in Figure 34 (AM) and Figure 36 (PM) show the impact of the additional employment trips of Santolina.

APPENDIX B
TURNING MOVEMENT DEVELOPMENT SPREADSHEETS

KSHEET

Peak-Hour Turning Movement Worksheet	
Peak Period (AM or PM)	AM: 5756
North/South Leg:	Atrisco Vista
East/West leg:	I-40 WB Ramps
SCENARIO:	2025

mes

trol overall turning volumes

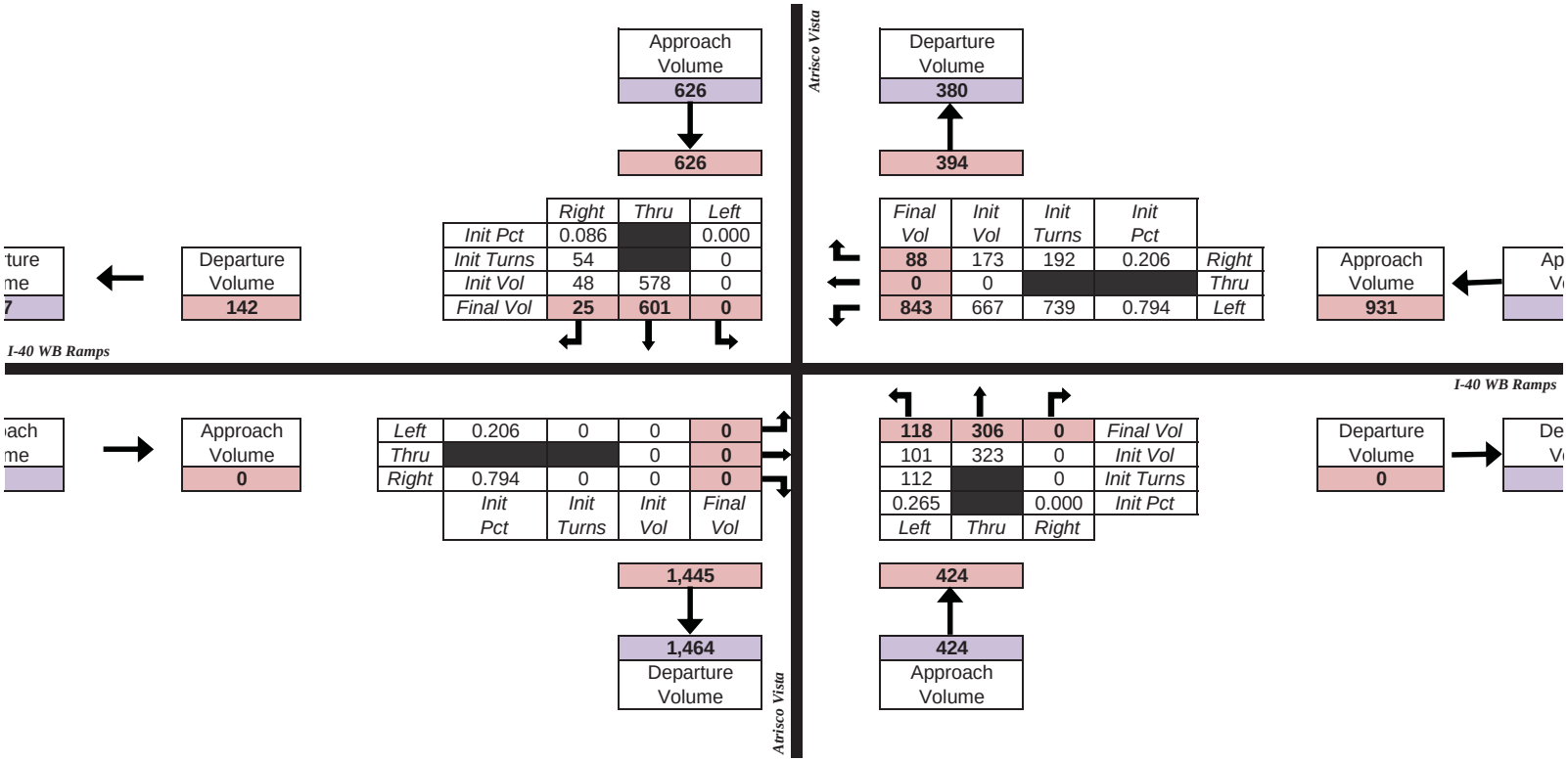

KSHEET

Peak-Hour Turning Movement Worksheet	
Peak Period (AM or PM)	PM: 5756
North/South Leg:	Atrisco Vista
East/West leg:	I-40 WB Ramps
SCENARIO:	2025

mes

trol overall turning volumes

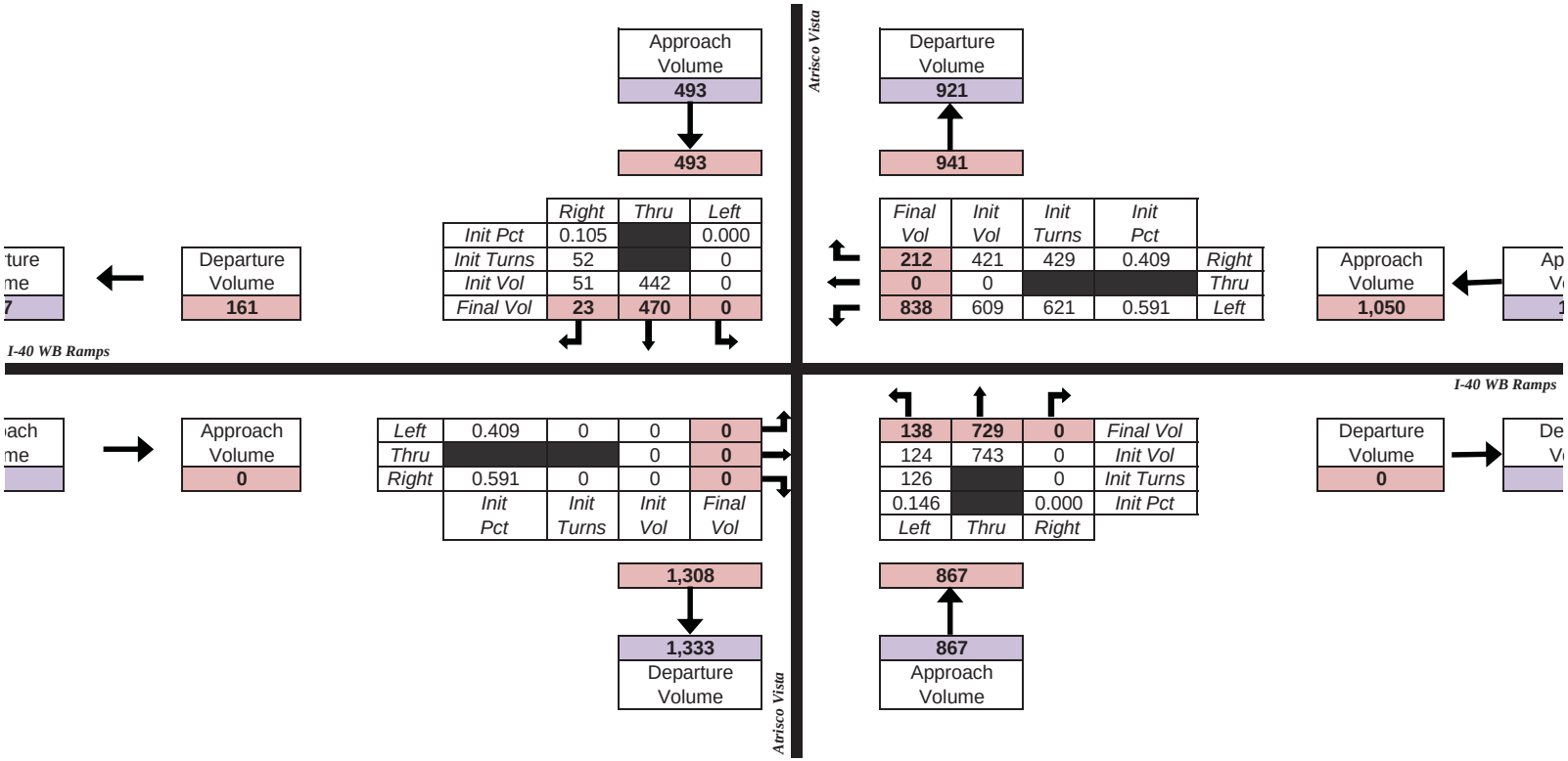

KSHEET

Peak-Hour Turning Movement Worksheet	
Peak Period (AM or PM)	AM: 3591
North/South Leg:	Atrisco Vista
East/West leg:	I-40 EB Ramps
SCENARIO:	2025

mes

trol overall turning volumes

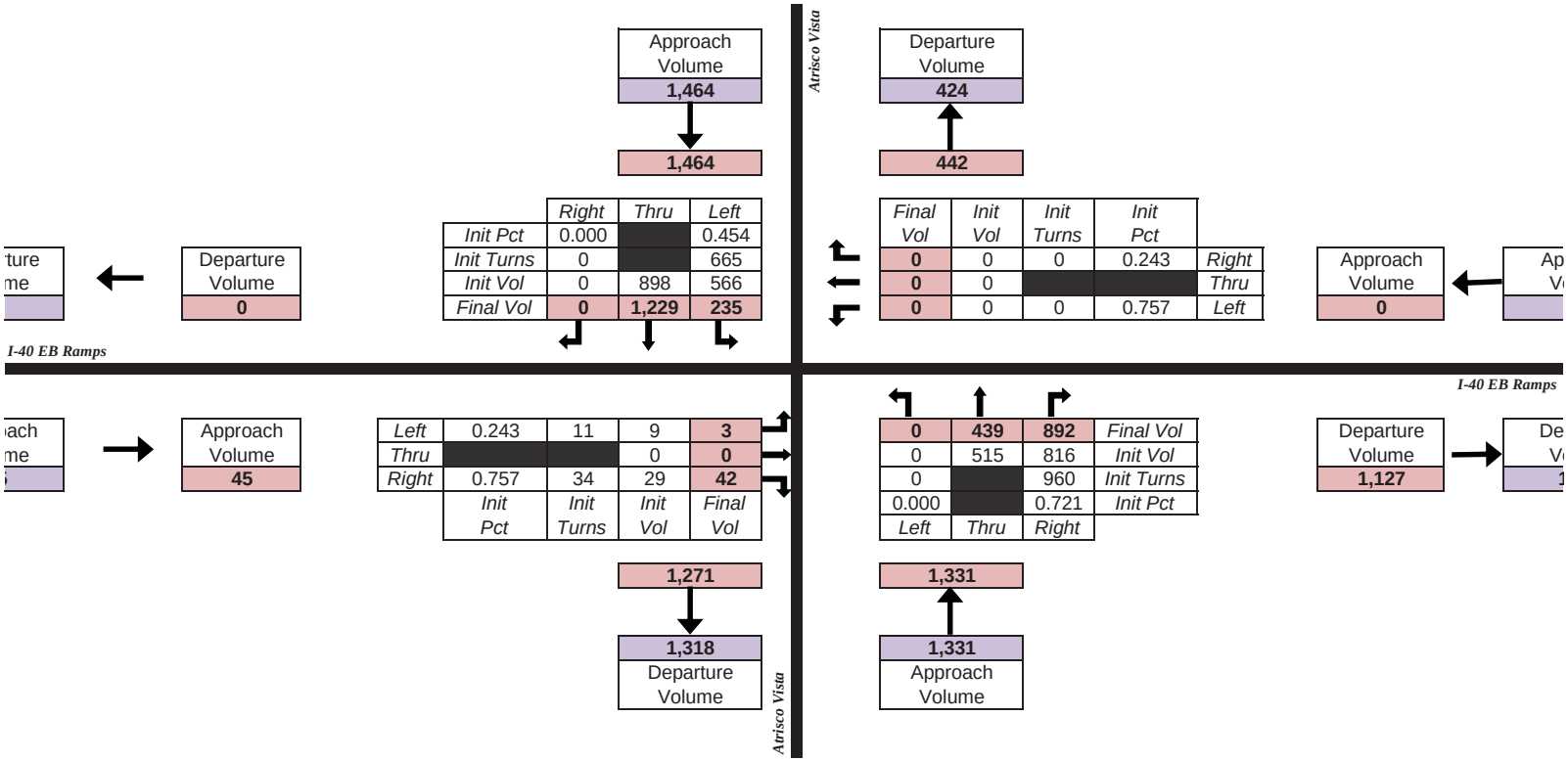

KSHEET

Peak-Hour Turning Movement Worksheet	
Peak Period (AM or PM)	PM: 3591
North/South Leg:	Atrisco Vista
East/West leg:	I-40 EB Ramps
SCENARIO:	2025

mes

trol overall turning volumes

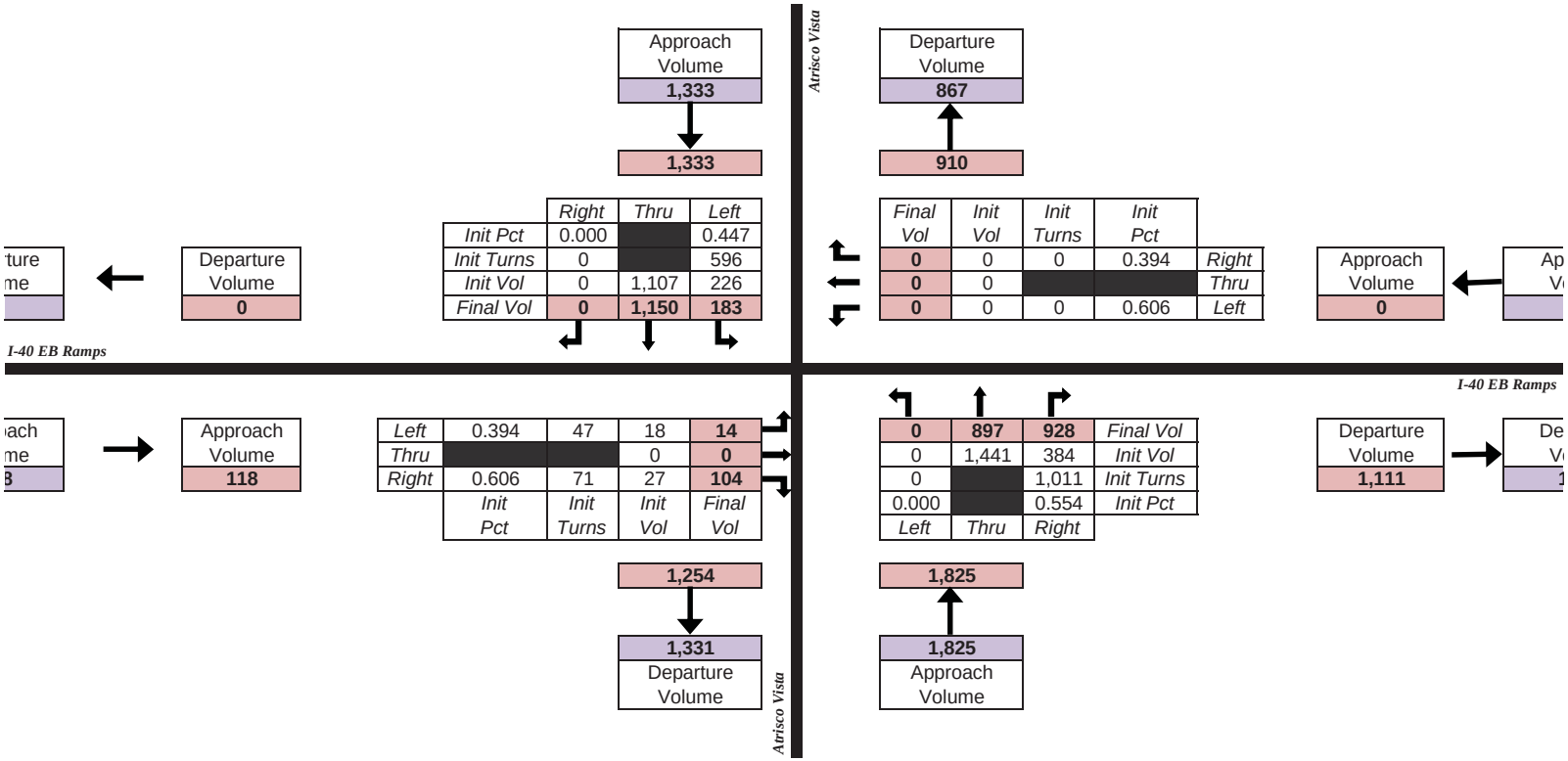

KSHEET

Peak-Hour Turning Movement Worksheet	
Peak Period (AM or PM)	AM: 5437
North/South Leg:	118th
East/West leg:	I-40 WB Ramps
SCENARIO:	2040

mes

trol overall turning volumes

118th

Approach Volume
644

644

Departure Volume
459

464

	Right	Thru	Left
Init Pct	0.113		0.000
Init Turns	73		0
Init Vol	68	576	0
Final Vol	**44**	**600**	**0**

Final Vol	*Init Vol*	*Init Turns*	*Init Pct*	
133	203	218	0.257	*Right*
0	0			*Thru*
715	589	630	0.743	*Left*

ture
me
9

Departure Volume
171

Approach Volume
848

Ap
V

I-40 WB Ramps

I-40 WB Ramps

ach
me

Approach Volume
0

Left	0.257	0	0	**0**
Thru			0	**0**
Right	0.743	0	0	**0**
	Init Pct	*Init Turns*	*Init Vol*	*Final Vol*

127	**331**	**0**	*Final Vol*
115	343	0	*Init Vol*
123		0	*Init Turns*
0.269		0.000	*Init Pct*
Left	*Thru*	*Right*	

Departure Volume
0

De
V

1,315

1,329
Departure Volume

458

458
Approach Volume

118th

KSHEET

Peak-Hour Turning Movement Worksheet	
Peak Period (AM or PM)	PM: 5437
North/South Leg:	118th
East/West leg:	I-40 WB Ramps
SCENARIO:	2040

mes

trol overall turning volumes

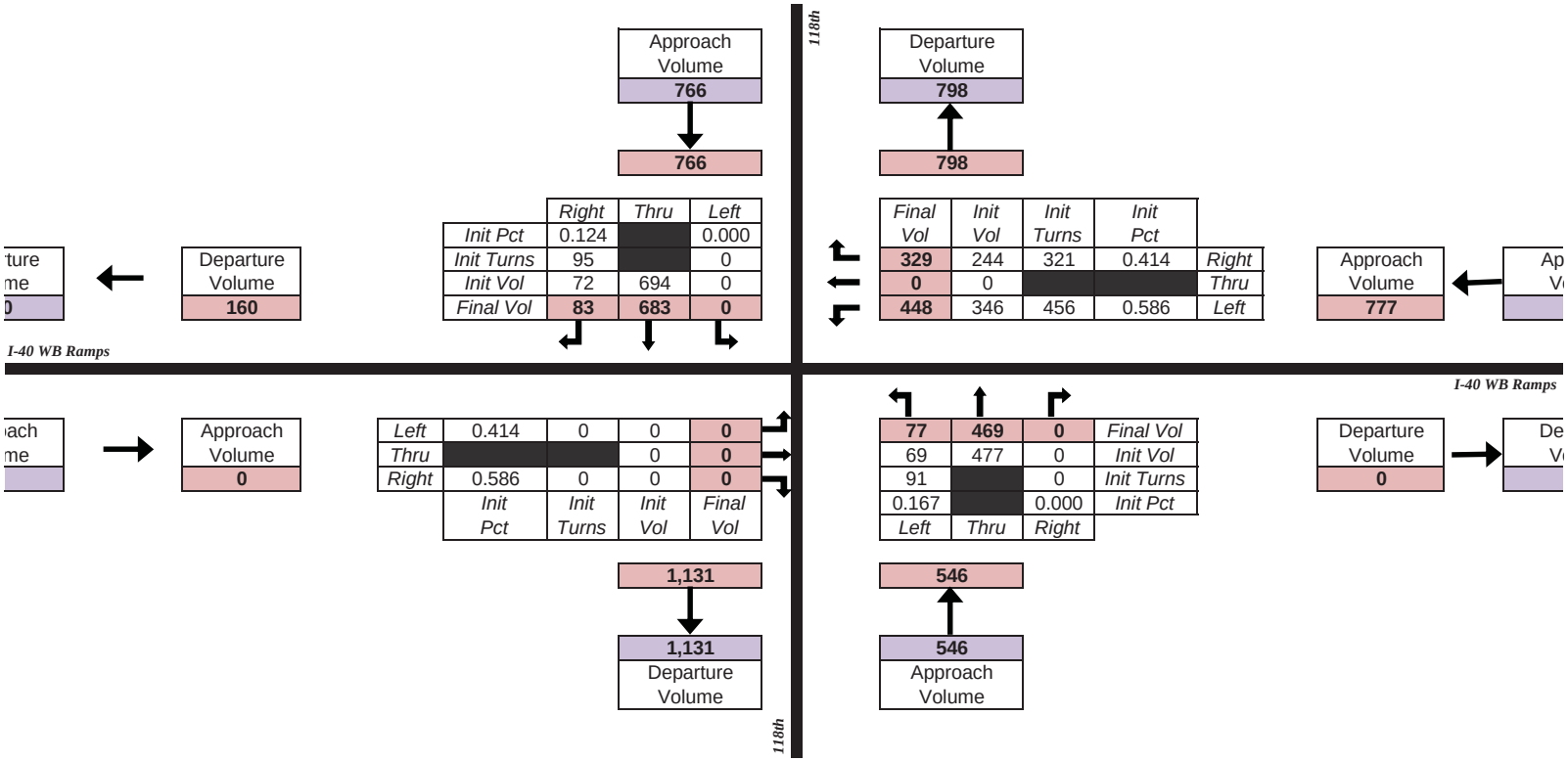

KSHEET

Peak-Hour Turning Movement Worksheet	
Peak Period (AM or PM)	AM: 8422
North/South Leg:	118th
East/West leg:	I-40 EB Ramps
SCENARIO:	2040

mes

trol overall turning volumes

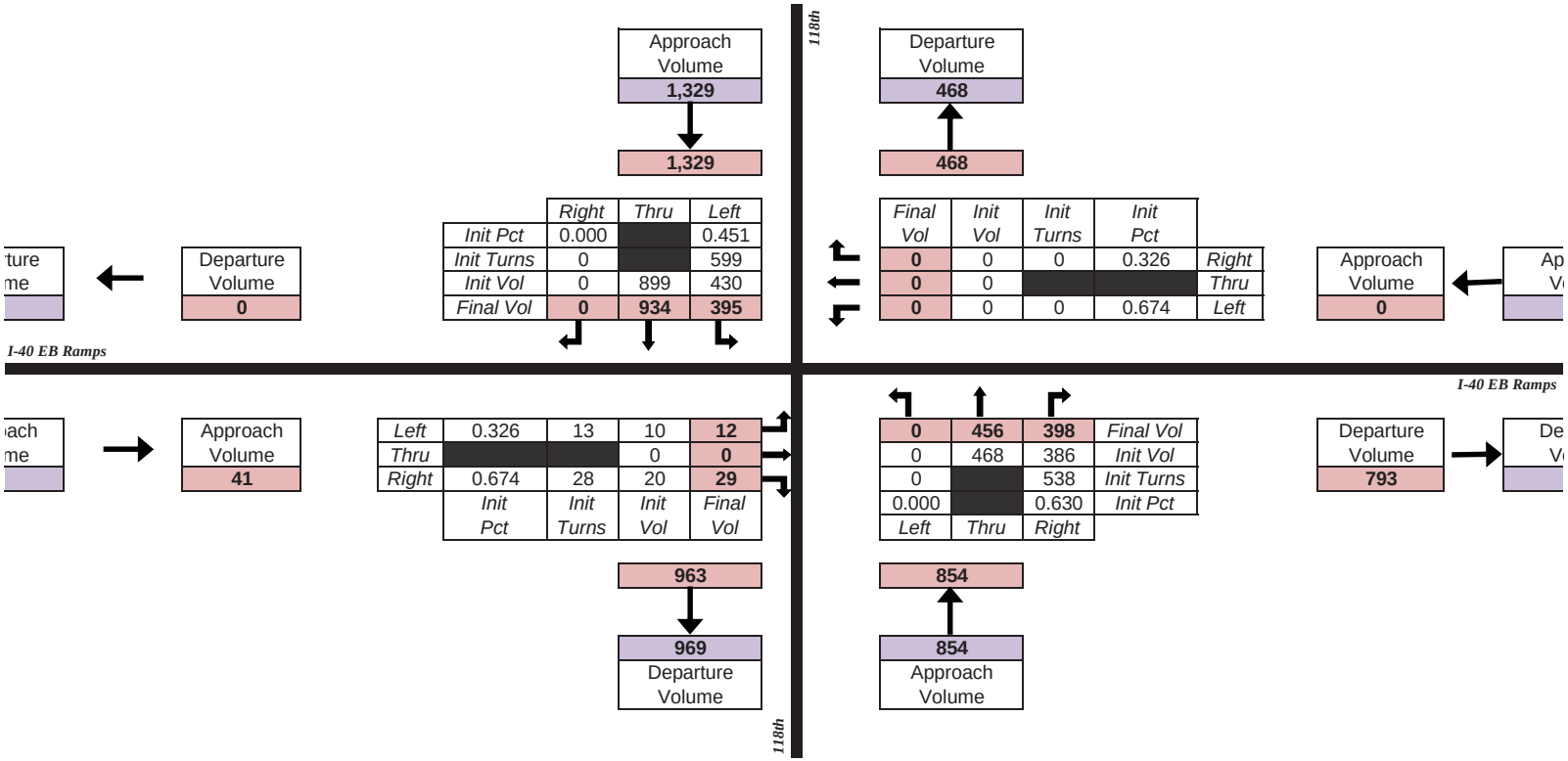

KSHEET

Peak-Hour Turning Movement Worksheet	
Peak Period (AM or PM)	PM: 8422
North/South Leg:	118th
East/West leg:	I-40 EB Ramps
SCENARIO:	2040

mes

trol overall turning volumes

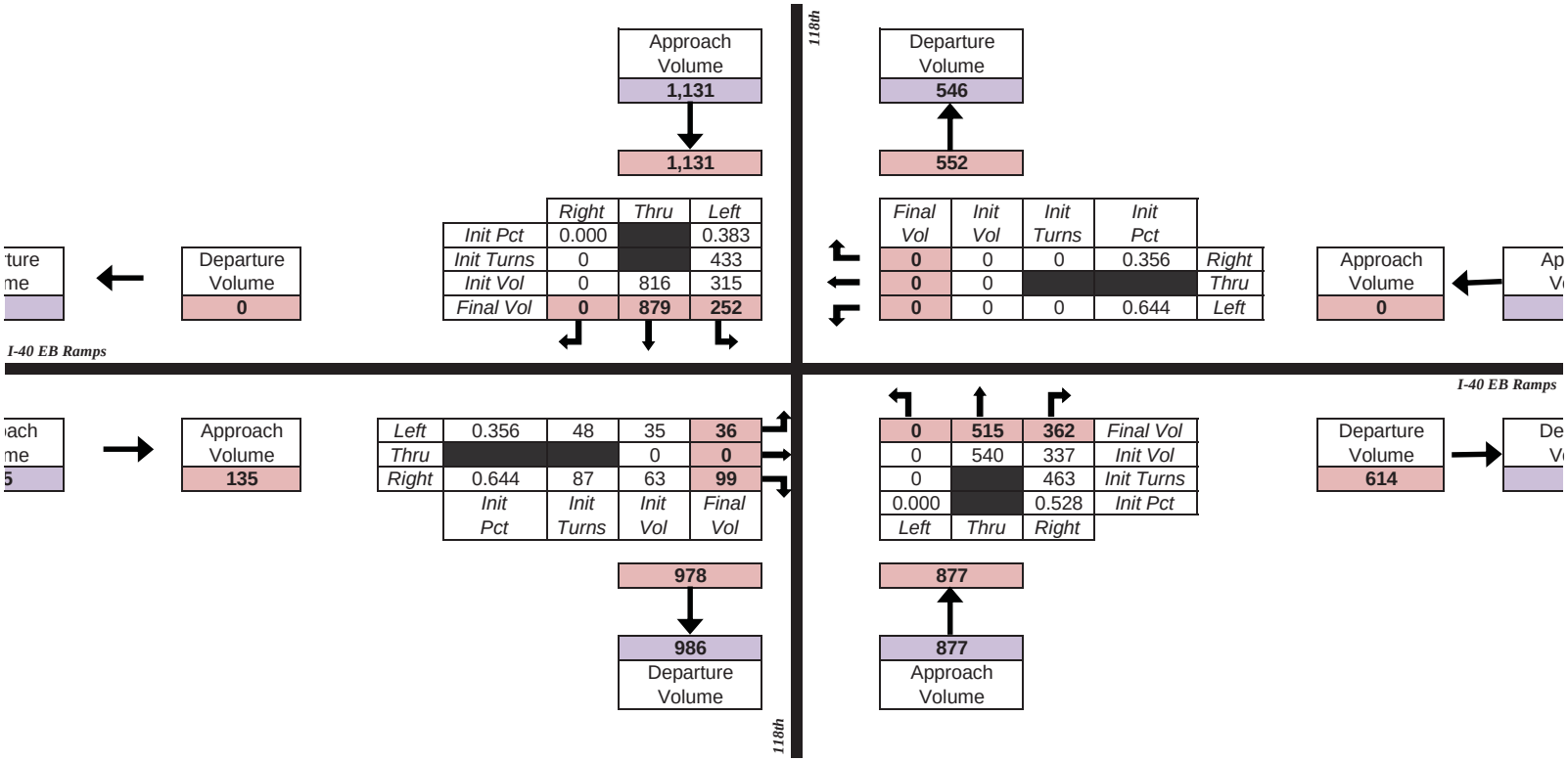

KSHEET

Peak-Hour Turning Movement Worksheet	
Peak Period (AM or PM)	AM: 3534
North/South Leg:	118th
East/West leg:	Central
SCENARIO:	2040

mes

trol overall turning volumes

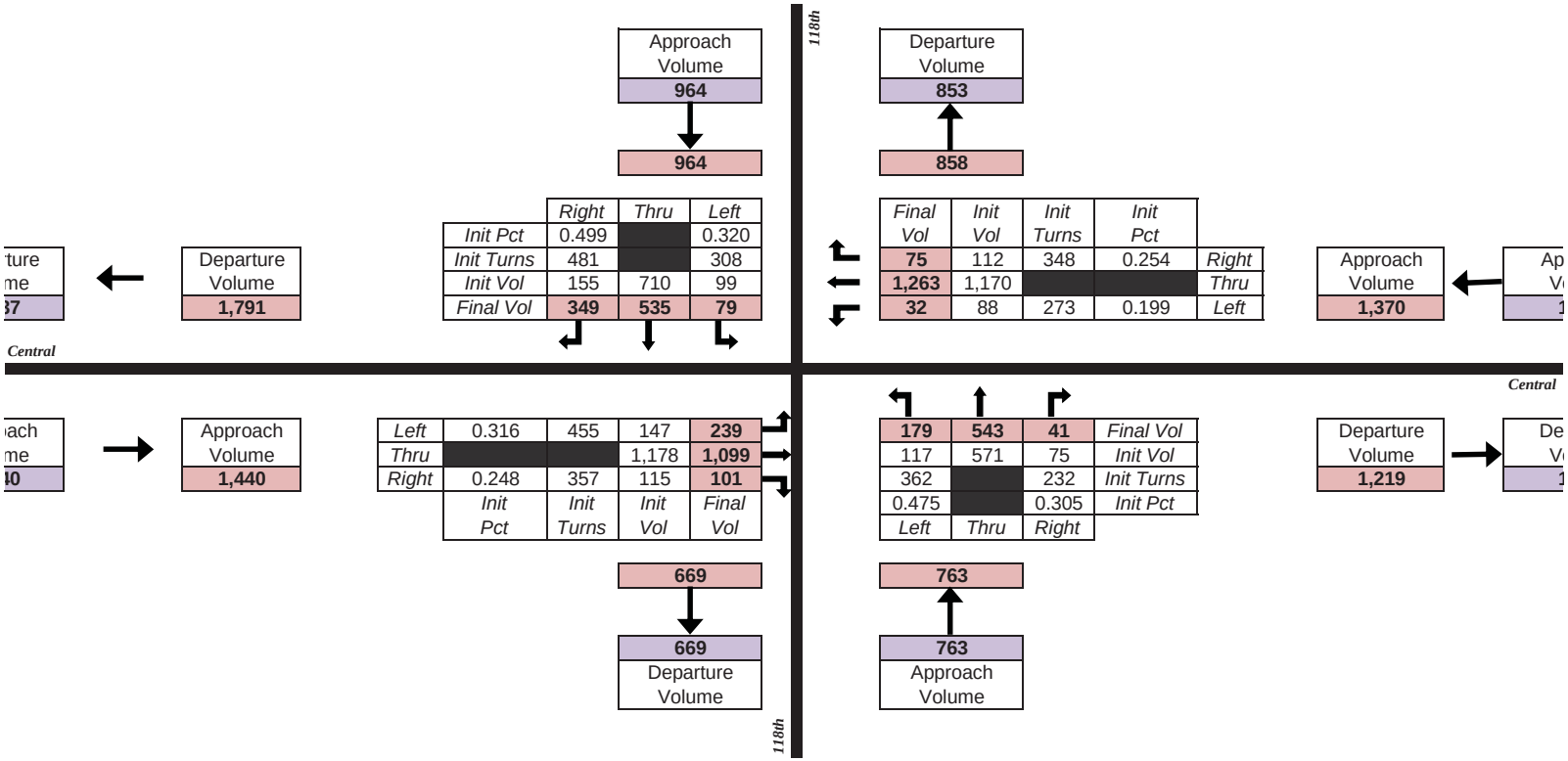

KSHEET

Peak-Hour Turning Movement Worksheet	
Peak Period (AM or PM)	PM: 3534
North/South Leg:	118th
East/West leg:	Central
SCENARIO:	2040

mes

trol overall turning volumes

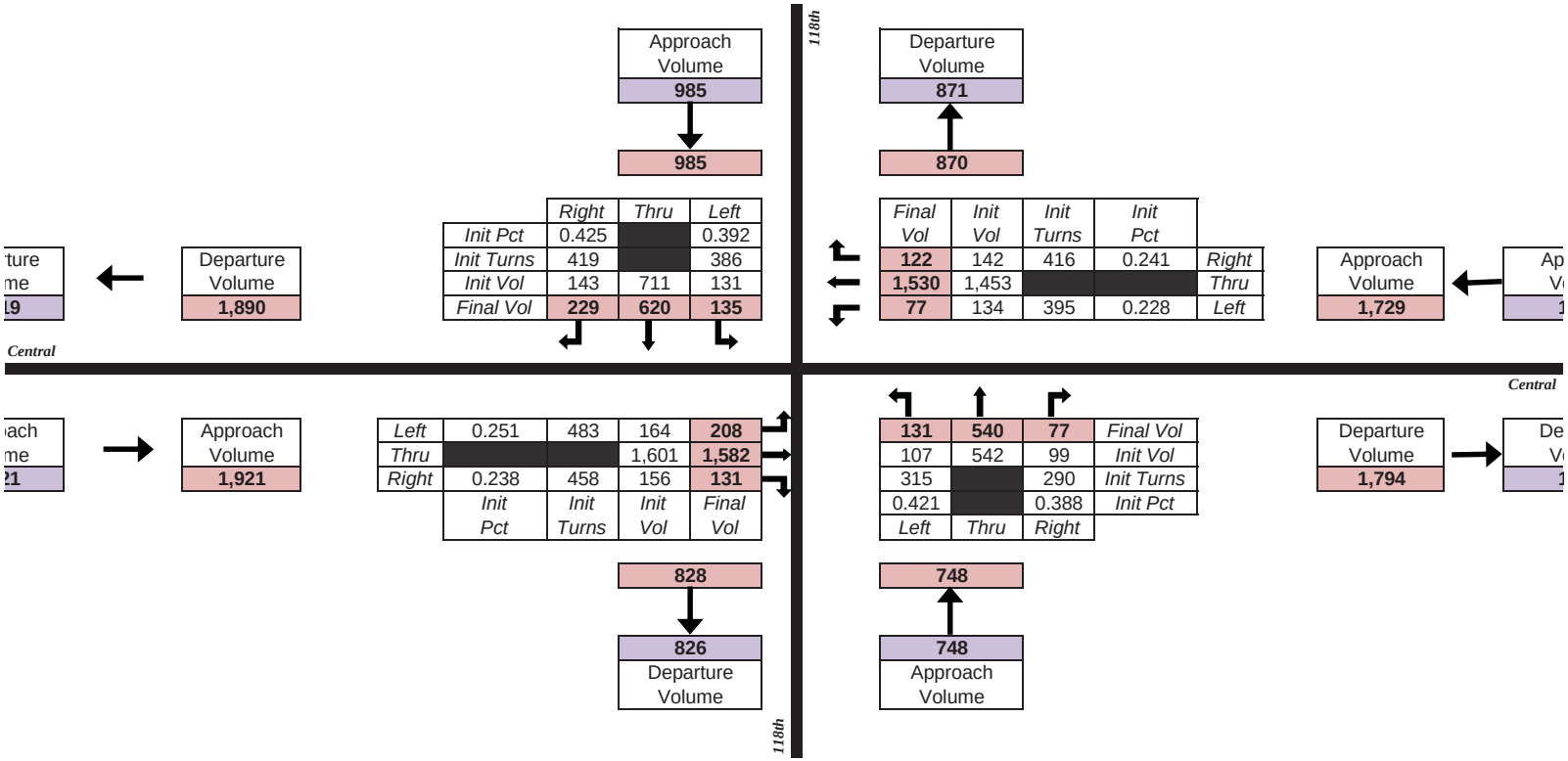

KSHEET

Peak-Hour Turning Movement Worksheet	
Peak Period (AM or PM)	AM: 4199
North/South Leg:	118th
East/West leg:	Gibson
SCENARIO:	2040

mes

trol overall turning volumes

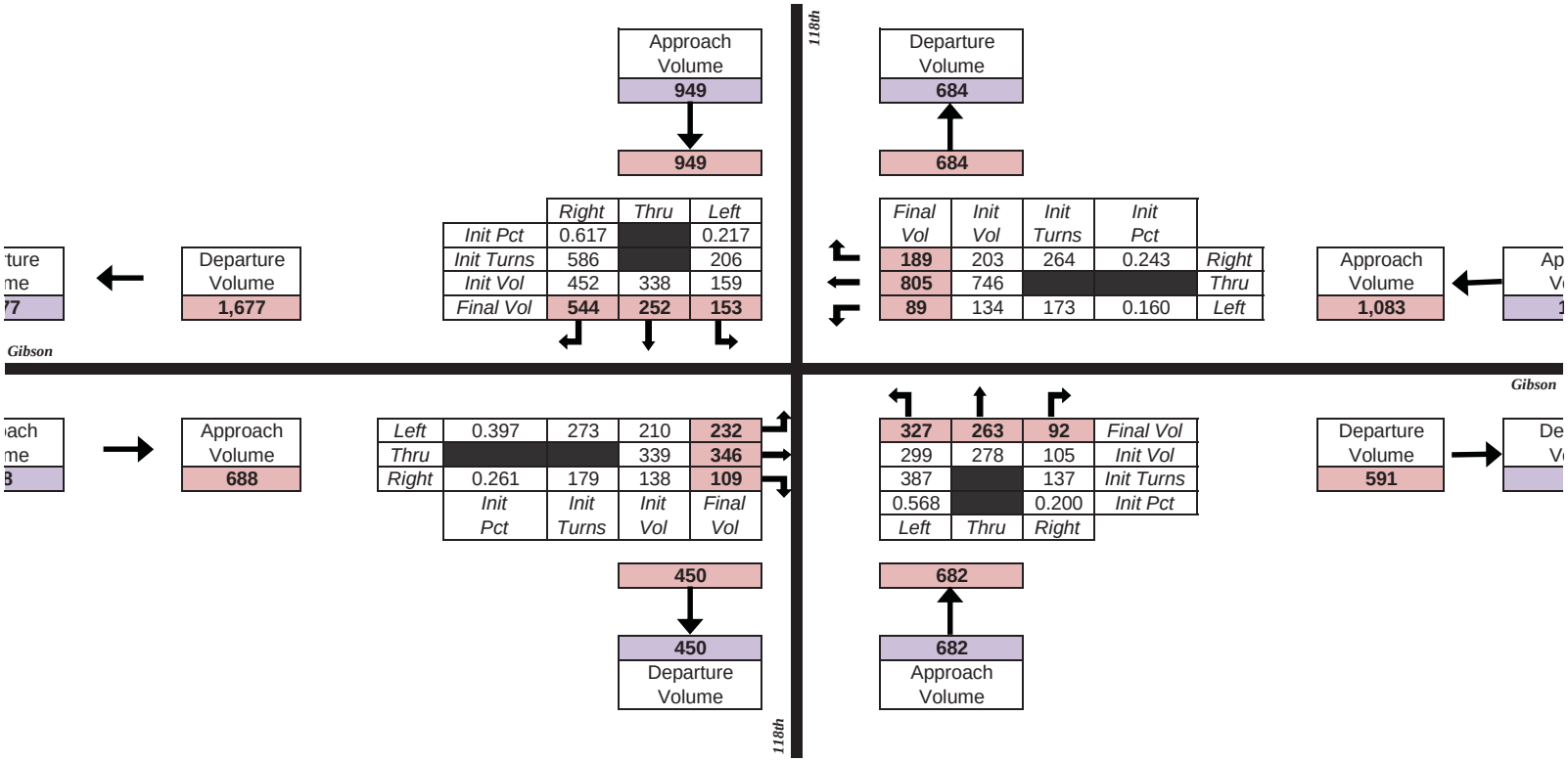

KSHEET

Peak-Hour Turning Movement Worksheet	
Peak Period (AM or PM)	PM: 3534
North/South Leg:	118th
East/West leg:	Central
SCENARIO:	2040

mes

trol overall turning volumes

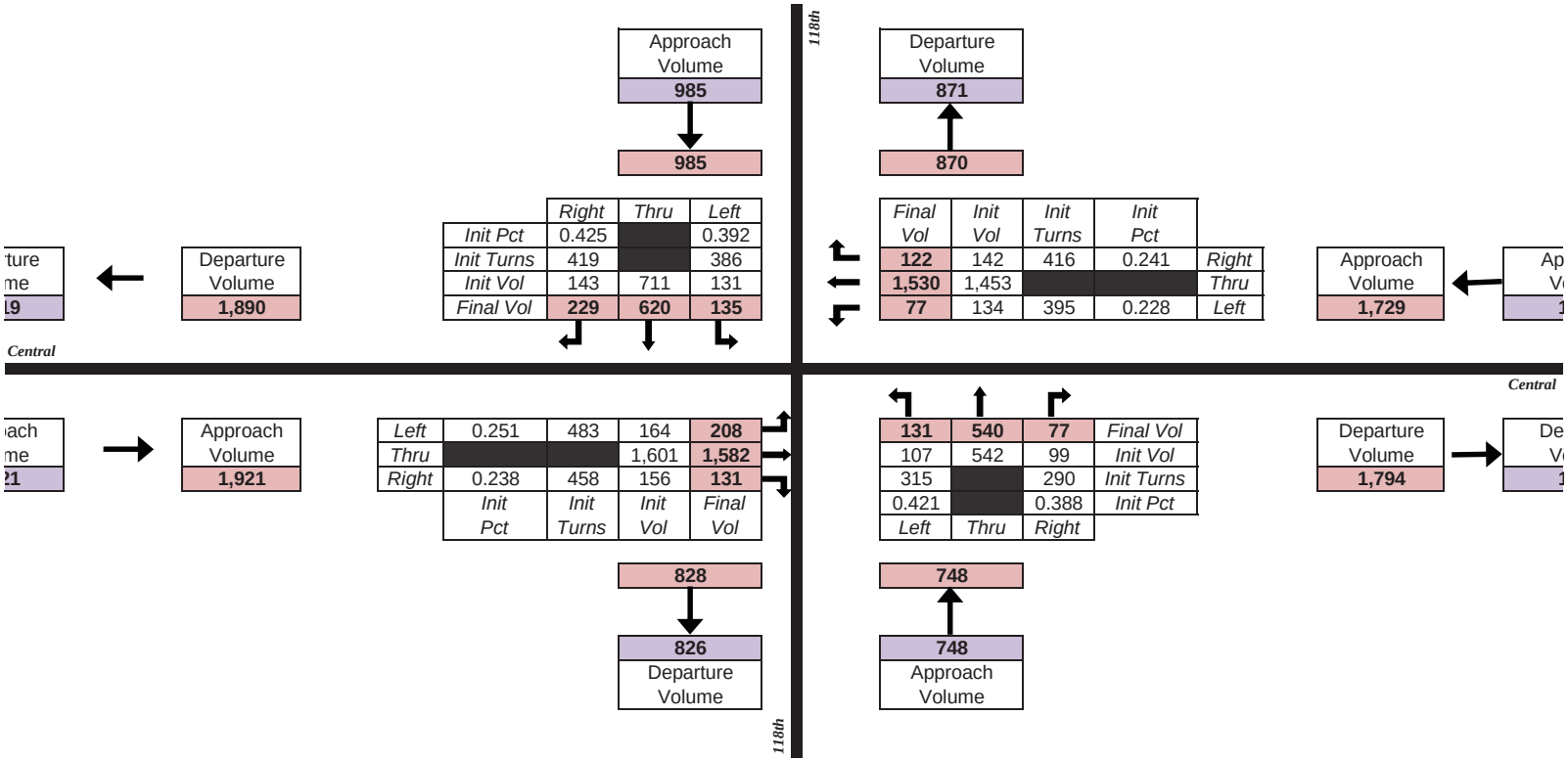

KSHEET

Peak-Hour Turning Movement Worksheet	
Peak Period (AM or PM)	AM: 4190
North/South Leg:	118th
East/West leg:	Dennis Chavez
SCENARIO:	2040

mes

trol overall turning volumes

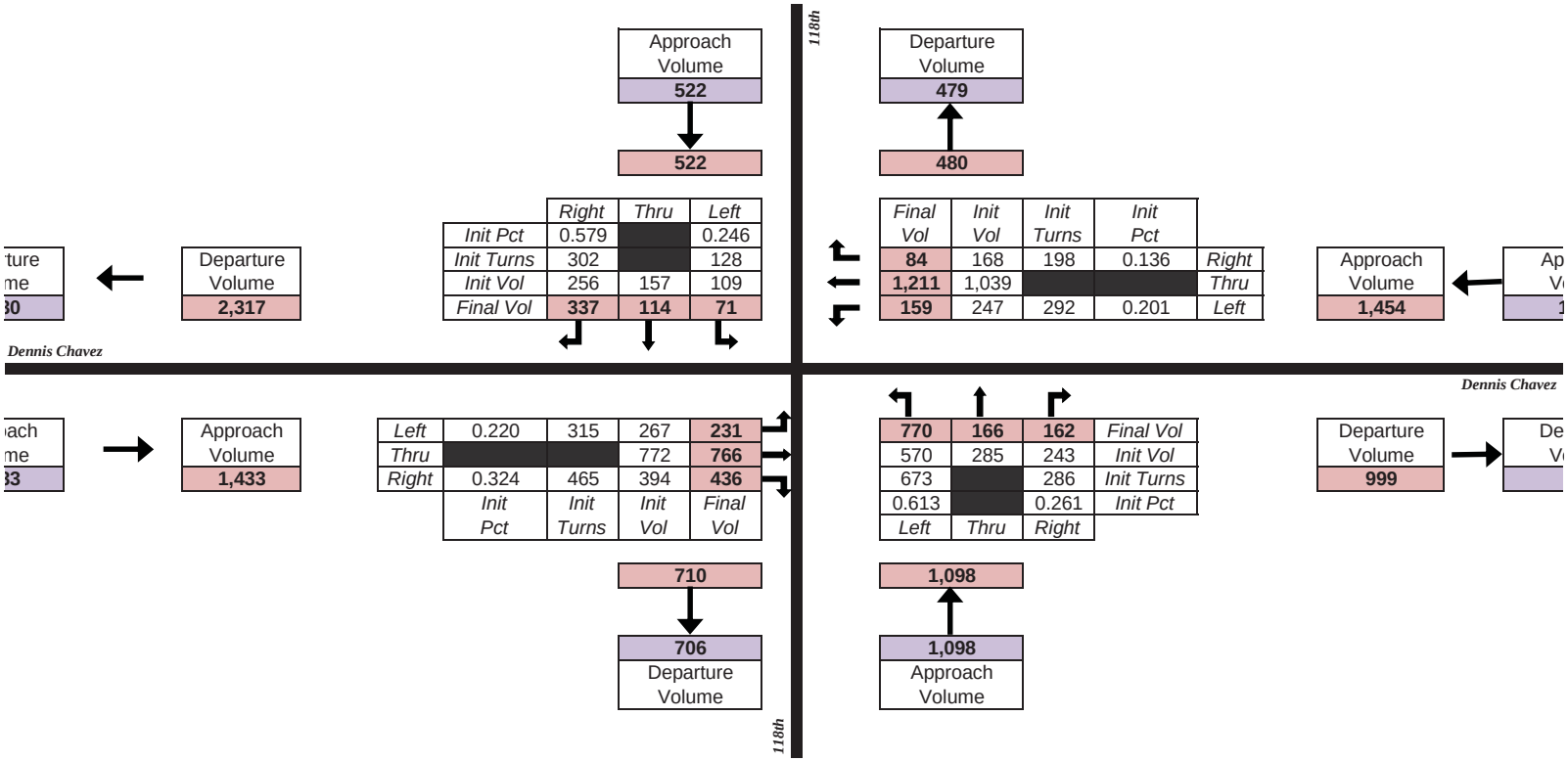

KSHEET

Peak-Hour Turning Movement Worksheet	
Peak Period (AM or PM)	PM: 4190
North/South Leg:	118th
East/West leg:	Dennis Chavez
SCENARIO:	2040

mes

trol overall turning volumes

118th

Approach Volume **621**

621

Departure Volume **492**

493

	Right	Thru	Left
Init Pct	0.449		0.337
Init Turns	279		209
Init Vol	223	230	168
Final Vol	**350**	**167**	**104**

Final Vol	Init Vol	Init Turns	Init Pct	
72	161	201	0.125	*Right*
1,324	1,079			*Thru*
205	362	452	0.282	*Left*

ture me **24**

Departure Volume **2,294**

Approach Volume **1,602**

Ap V 1

Dennis Chavez

Dennis Chavez

ach me **31**

Approach Volume **2,481**

Left	0.147	365	292	**261**
Thru			1,532	**1,478**
Right	0.331	821	657	**742**
	Init Pct	*Init Turns*	*Init Vol*	*Final Vol*

620	**160**	**184**	*Final Vol*
393	276	295	*Init Vol*
491		369	*Init Turns*
0.509		0.383	*Init Pct*
Left	*Thru*	*Right*	

Departure Volume **1,766**

De V 1

1,114

1,107 Departure Volume

964

964 Approach Volume

118th

KSHEET

Peak-Hour Turning Movement Worksheet	
Peak Period (AM or PM)	AM: 10171
North/South Leg:	118th
East/West leg:	Gun Club
SCENARIO:	2040

mes

trol overall turning volumes

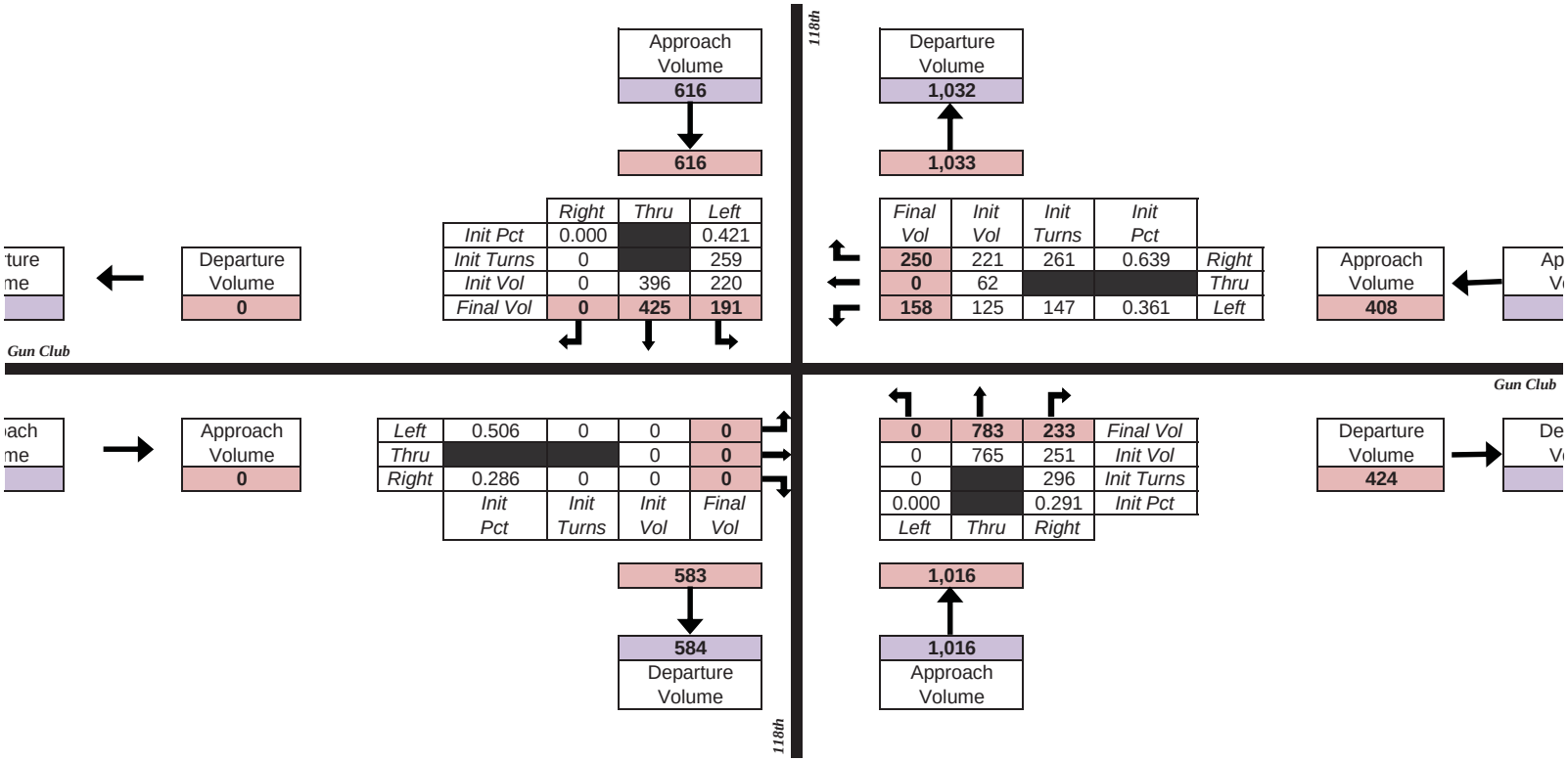

KSHEET

Peak-Hour Turning Movement Worksheet	
Peak Period (AM or PM)	PM: 10171
North/South Leg:	118th
East/West leg:	Gun Club
SCENARIO:	2040

mes

trol overall turning volumes

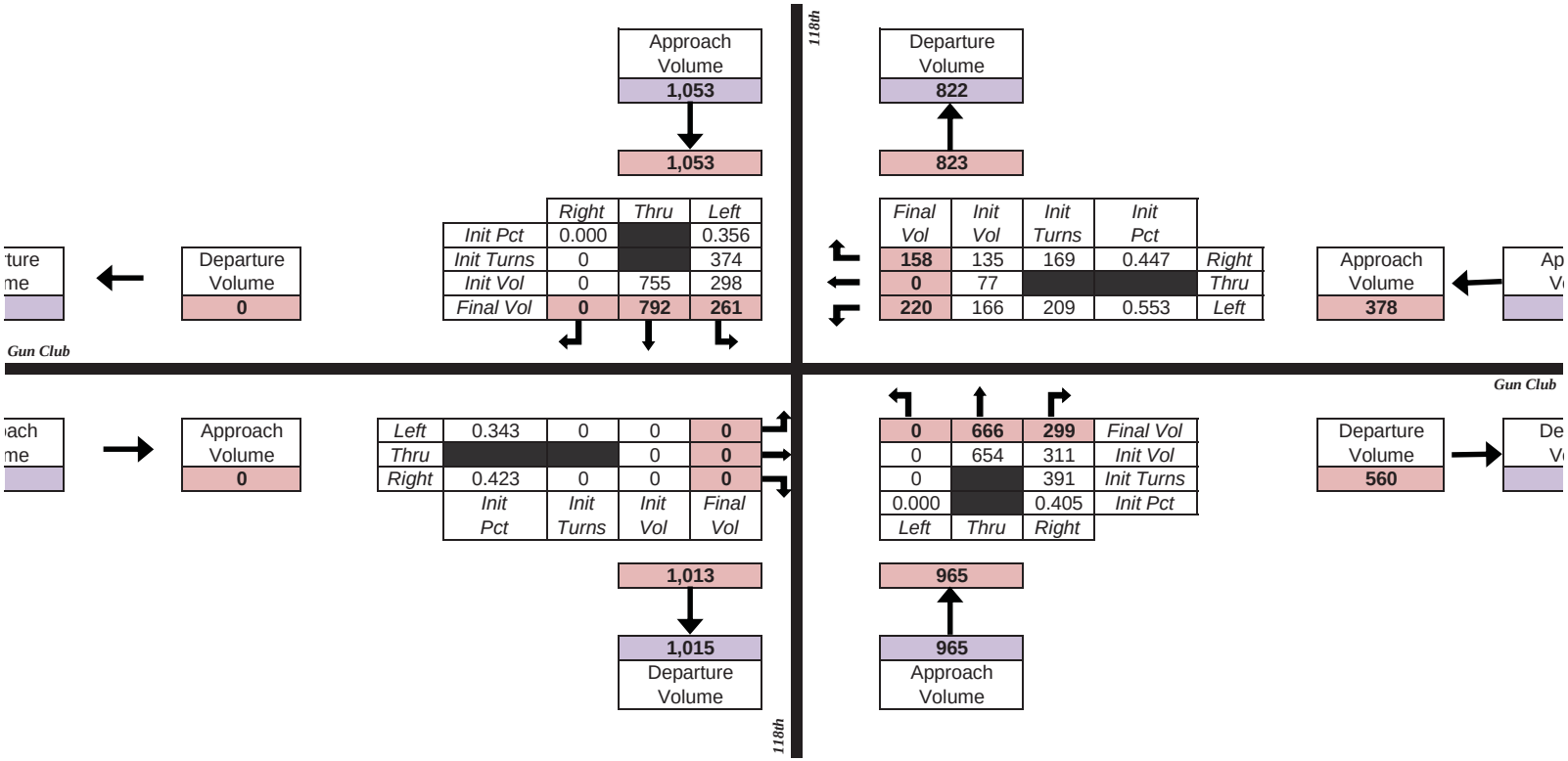

WORKSHEET

Peak-Hour Turning Movement Worksheet	
Peak Period (AM or PM)	AM: 3467
North/South Leg:	98th
East/West leg:	Central
SCENARIO:	2040

et
nent Volumes

re to control overall turning volumes

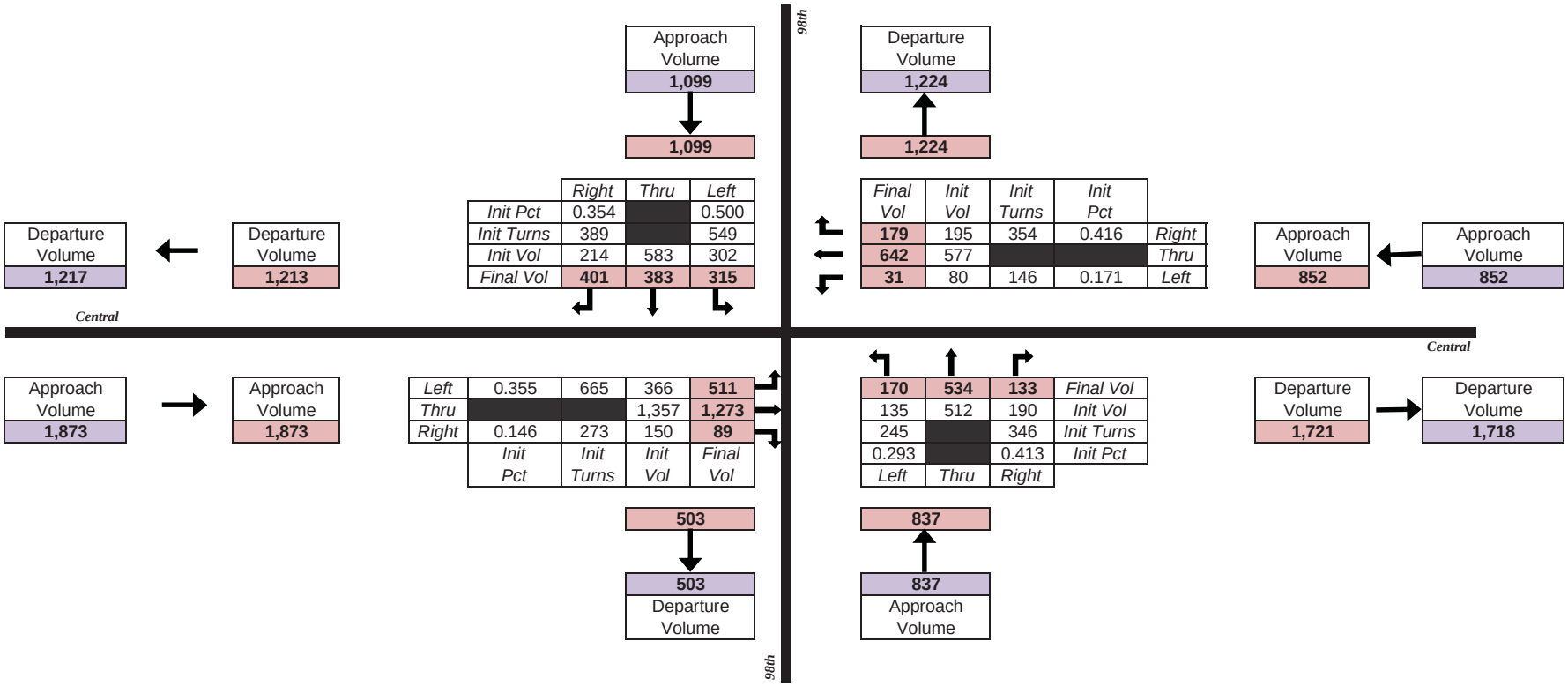

WORKSHEET

Peak-Hour Turning Movement Worksheet	
Peak Period (AM or PM)	PM: 3467
North/South Leg:	98th
East/West leg:	Central
SCENARIO:	2040

et
nent Volumes

re to control overall turning volumes

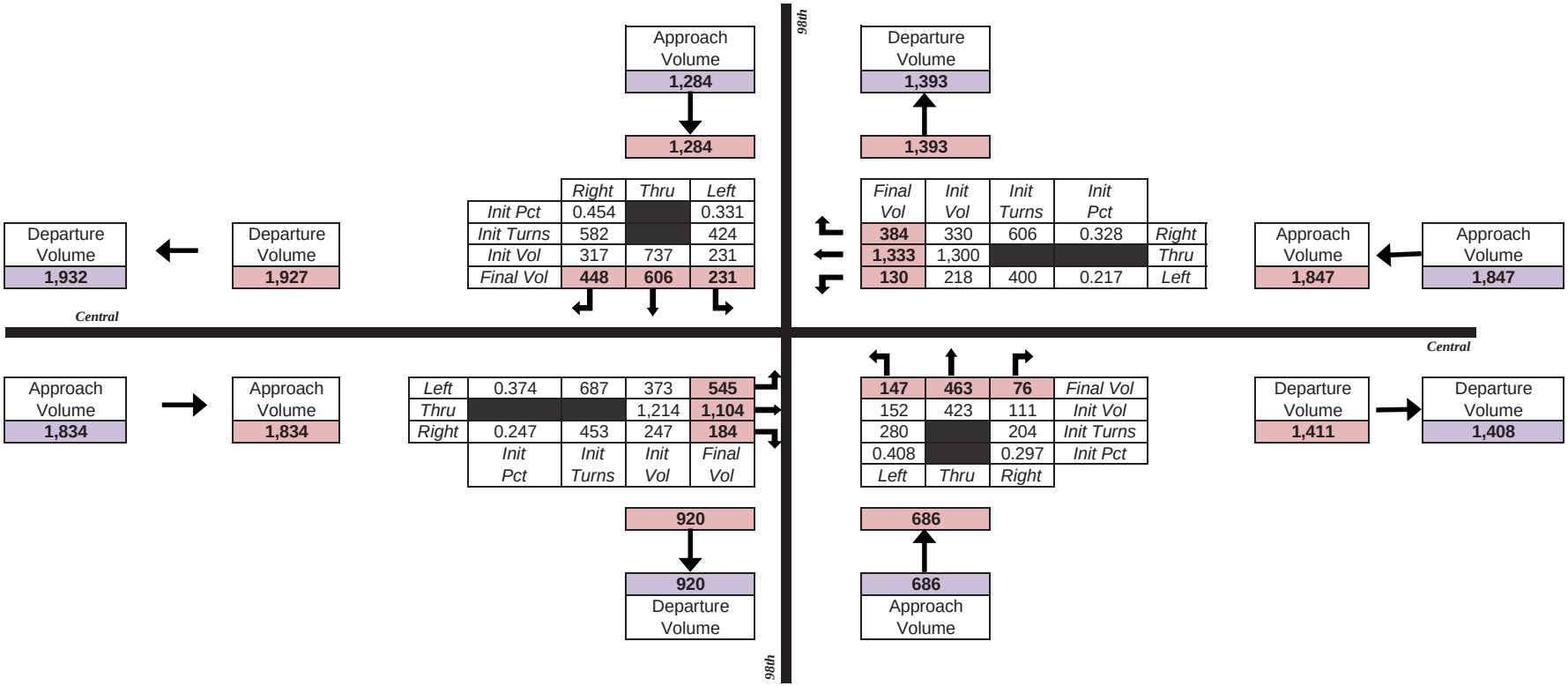

WORKSHEET

Peak-Hour Turning Movement Worksheet	
Peak Period (AM or PM)	AM: 5269
North/South Leg:	106th
East/West leg:	Central
SCENARIO:	2040

et
nent Volumes

re to control overall turning volumes

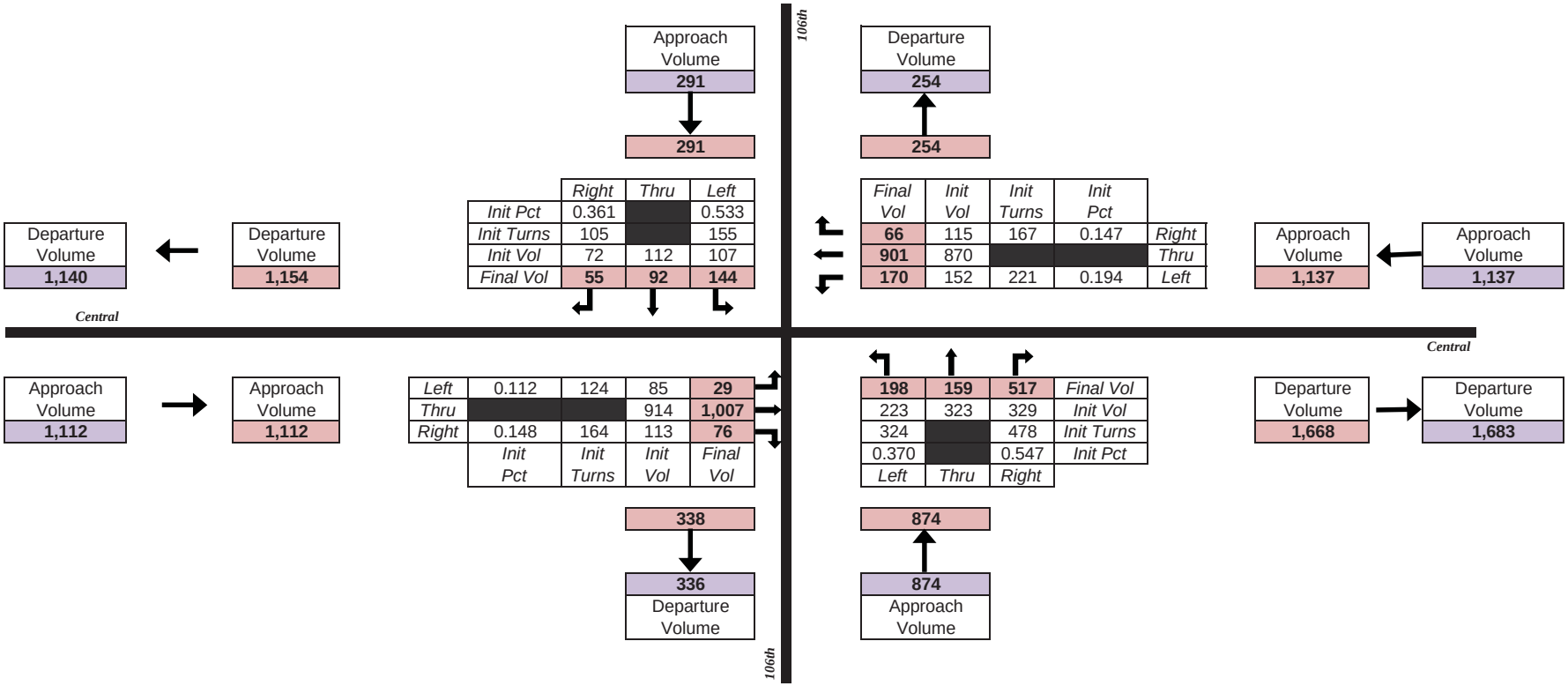

WORKSHEET

Peak-Hour Turning Movement Worksheet	
Peak Period (AM or PM)	PM: 5269
North/South Leg:	106th
East/West leg:	Central
SCENARIO:	2040

et
nent Volumes

re to control overall turning volumes

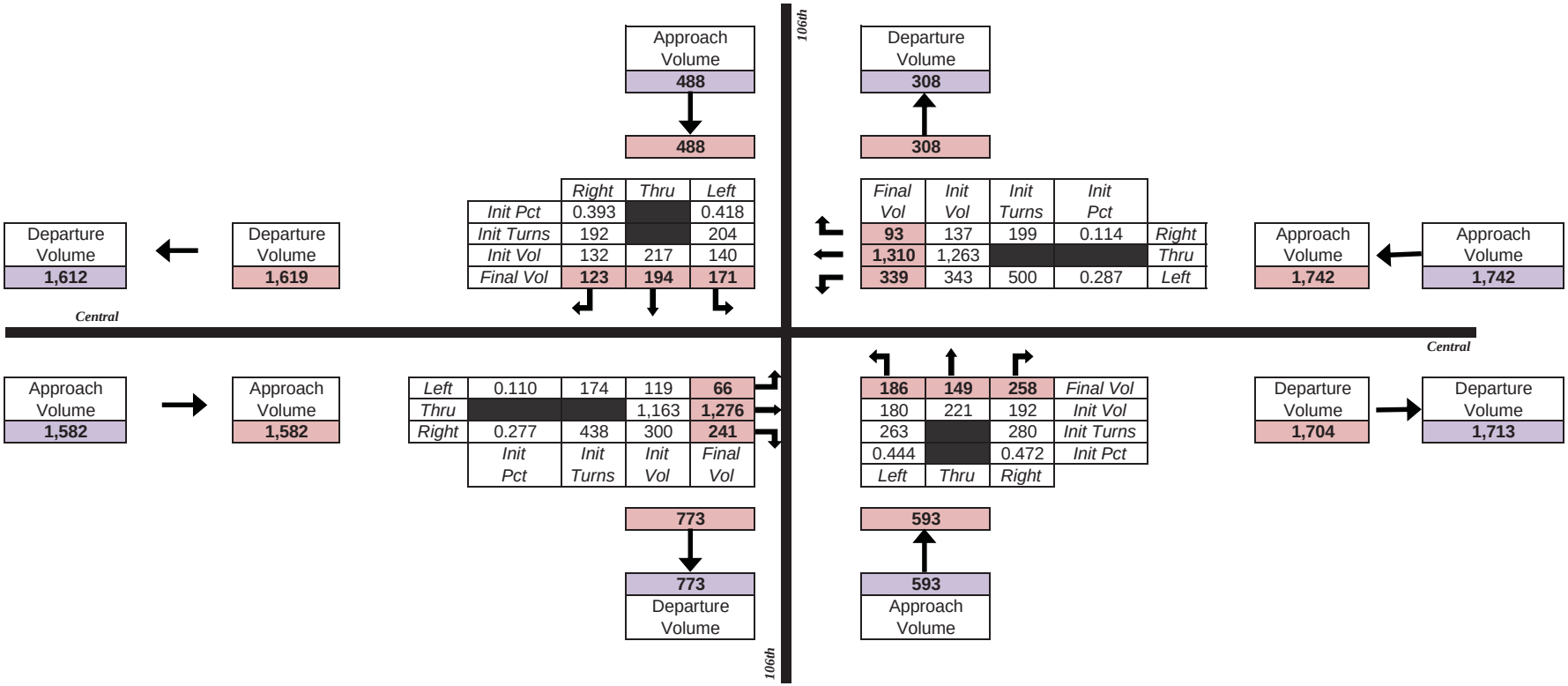

WORKSHEET

Peak-Hour Turning Movement Worksheet	
Peak Period (AM or PM)	AM: 5470
North/South Leg:	Unser
East/West leg:	Dennis Chavez
SCENARIO:	2040

et
nent Volumes

re to control overall turning volumes

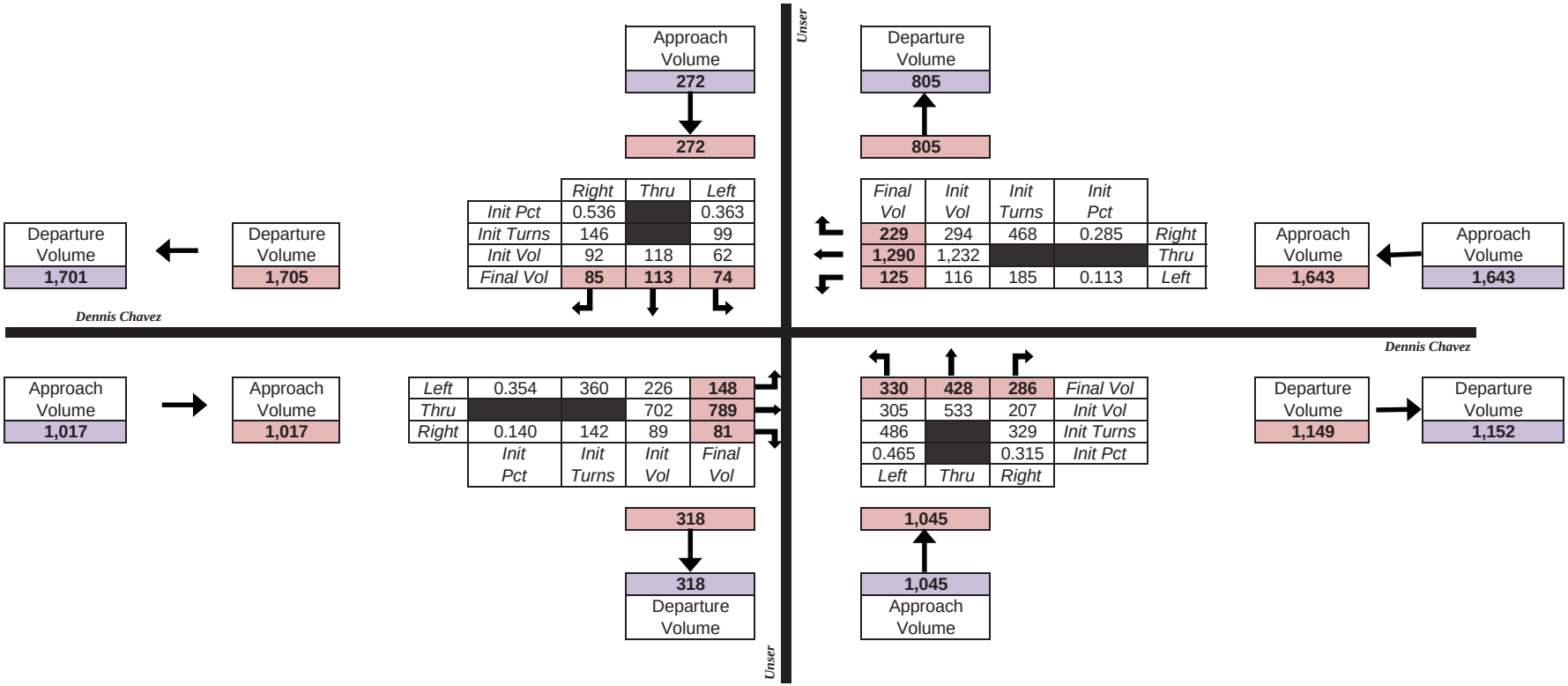

WORKSHEET

Peak-Hour Turning Movement Worksheet	
Peak Period (AM or PM)	PM: 5470
North/South Leg:	Unser
East/West leg:	Dennis Chavez
SCENARIO:	2040

et
nent Volumes

re to control overall turning volumes

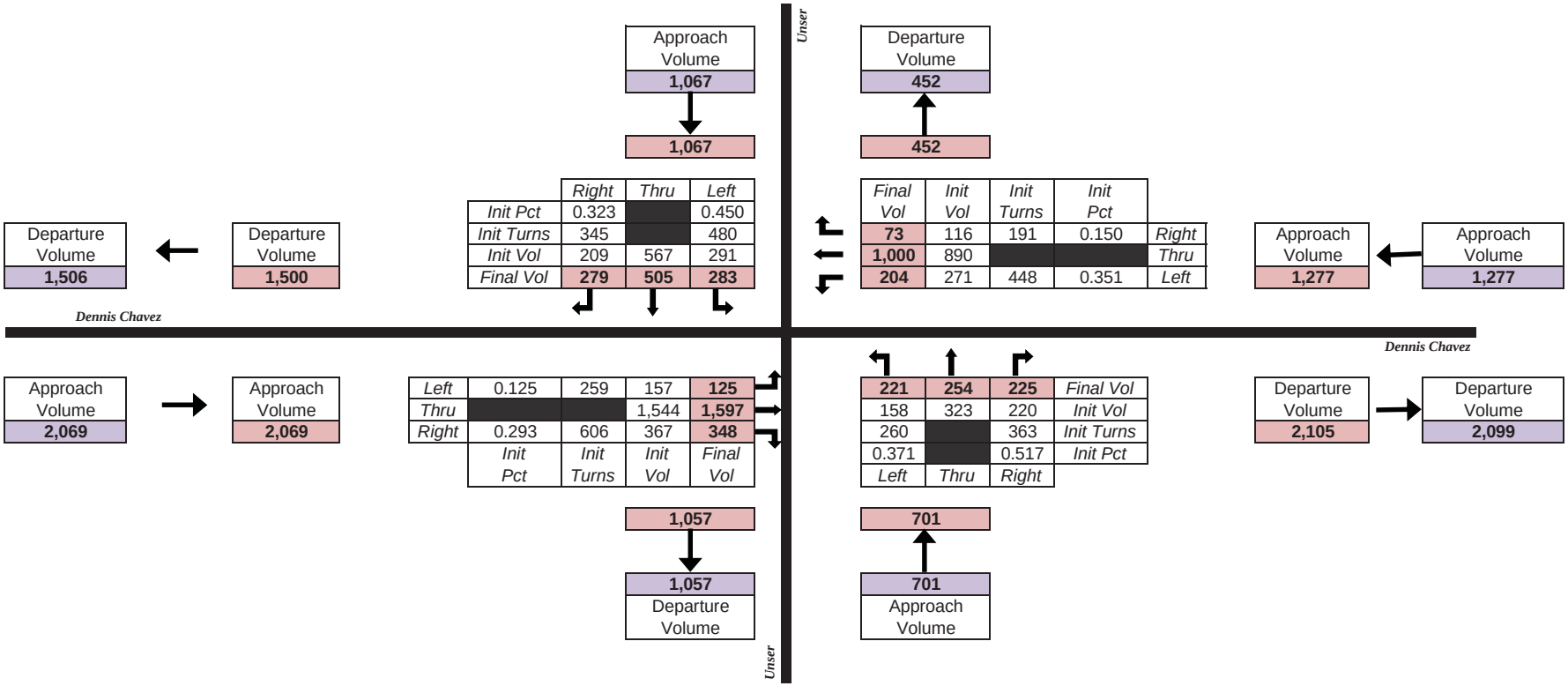

WORKSHEET

Peak-Hour Turning Movement Worksheet	
Peak Period (AM or PM)	AM: 3760
North/South Leg:	Coors
East/West leg:	Rio Bravo
SCENARIO:	2040

et
nent Volumes

re to control overall turning volumes

Approach Volume **1,376**

1,376

Departure Volume **2,533**

2,531

	Right	Thru	Left
Init Pct	0.367		0.386
Init Turns	505		532
Init Vol	232	899	245
Final Vol	**255**	**828**	**293**

Final Vol	*Init Vol*	*Init Turns*	*Init Pct*	
323	319	694	0.495	*Right*
967	952			*Thru*
111	131	284	0.203	*Left*

Departure Volume **1,544**

Departure Volume **1,545**

Approach Volume **1,402**

Approach Volume **1,402**

Rio Bravo

Rio Bravo

Approach Volume **1,351**

Approach Volume **1,351**

Left	0.488	659	303	**289**
Thru			924	**963**
Right	0.200	270	124	**100**
	Init Pct	*Init Turns*	*Init Vol*	*Final Vol*

322	**1,919**	**370**	*Final Vol*
325	1,943	342	*Init Vol*
707		744	*Init Turns*
0.271		0.285	*Init Pct*
Left	*Thru*	*Right*	

Departure Volume **1,625**

Departure Volume **1,625**

1,039

1,037 Departure Volume

2,611

2,611 Approach Volume

Coors

Coors

WORKSHEET

Peak-Hour Turning Movement Worksheet	
Peak Period (AM or PM)	PM: 3760
North/South Leg:	Coors
East/West leg:	Rio Bravo
SCENARIO:	2040

et
nent Volumes

re to control overall turning volumes

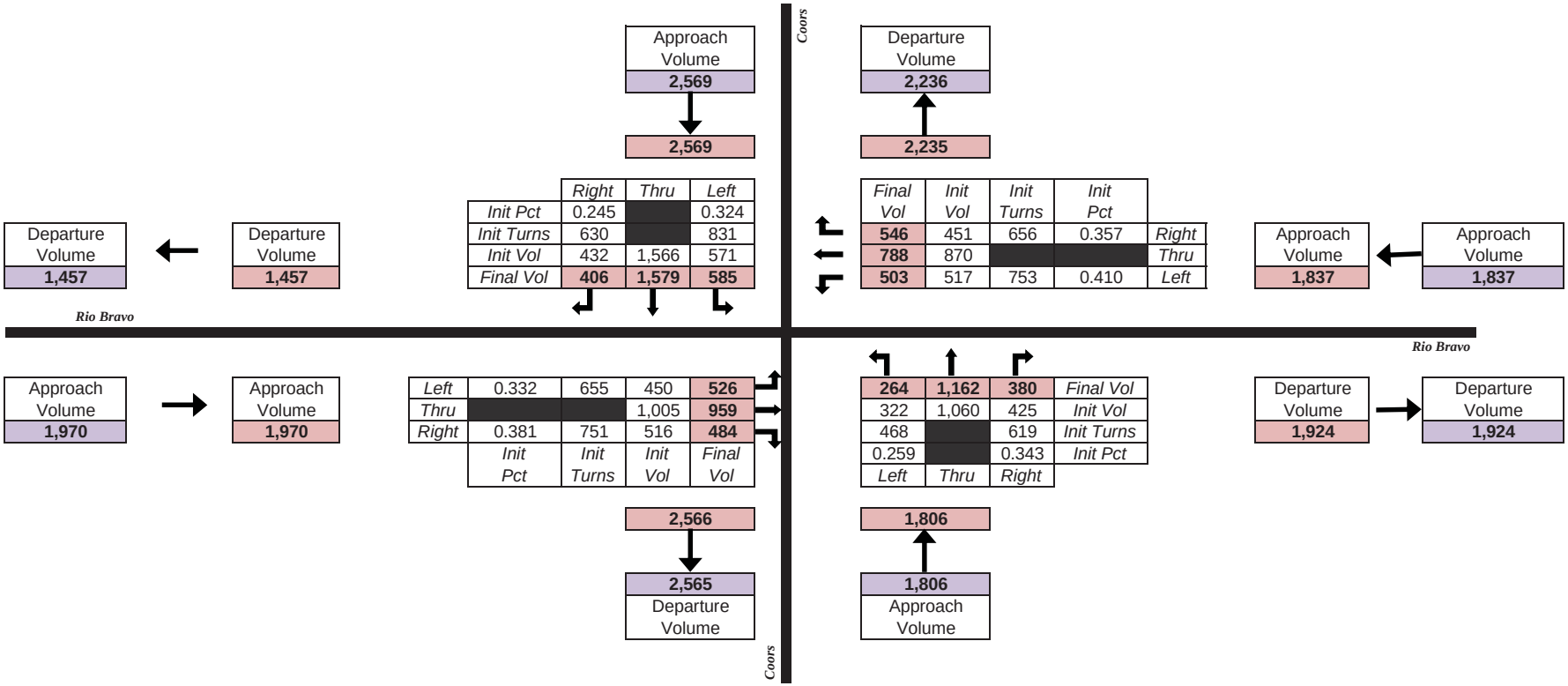

WORKSHEET

Peak-Hour Turning Movement Worksheet	
Peak Period (AM or PM)	AM: 3766
North/South Leg:	Isleta
East/West leg:	Rio Bravo
SCENARIO:	2040

et
nent Volumes

re to control overall turning volumes

Approach Volume **579**

579

Departure Volume **1,320**

1,323

	Right	Thru	Left
Init Pct	0.343		0.570
Init Turns	199		330
Init Vol	119	261	198
Final Vol	**95**	**197**	**287**

Final Vol	Init Vol	Init Turns	Init Pct	
458	447	745	0.414	Right
1,223	1,226			Thru
120	127	212	0.118	Left

Departure Volume **1,494**

Departure Volume **1,509**

Approach Volume **1,801**

Approach Volume **1,801**

Rio Bravo

Rio Bravo

Approach Volume **1,888**

Approach Volume **1,888**

Left	0.316	596	358	**227**
Thru			1,428	**1,601**
Right	0.090	170	102	**60**
	Init Pct	Init Turns	Init Vol	Final Vol

191	**637**	**576**	Final Vol
238	772	395	Init Vol
396		658	Init Turns
0.282		0.469	Init Pct
Left	Thru	Right	

Departure Volume **2,464**

Departure Volume **2,482**

376

376 Departure Volume

1,405

1,405 Approach Volume

Isleta

Isleta

WORKSHEET

Peak-Hour Turning Movement Worksheet	
Peak Period (AM or PM)	PM: 3766
North/South Leg:	Isleta
East/West leg:	Rio Bravo
SCENARIO:	2040

et
nent Volumes

re to control overall turning volumes

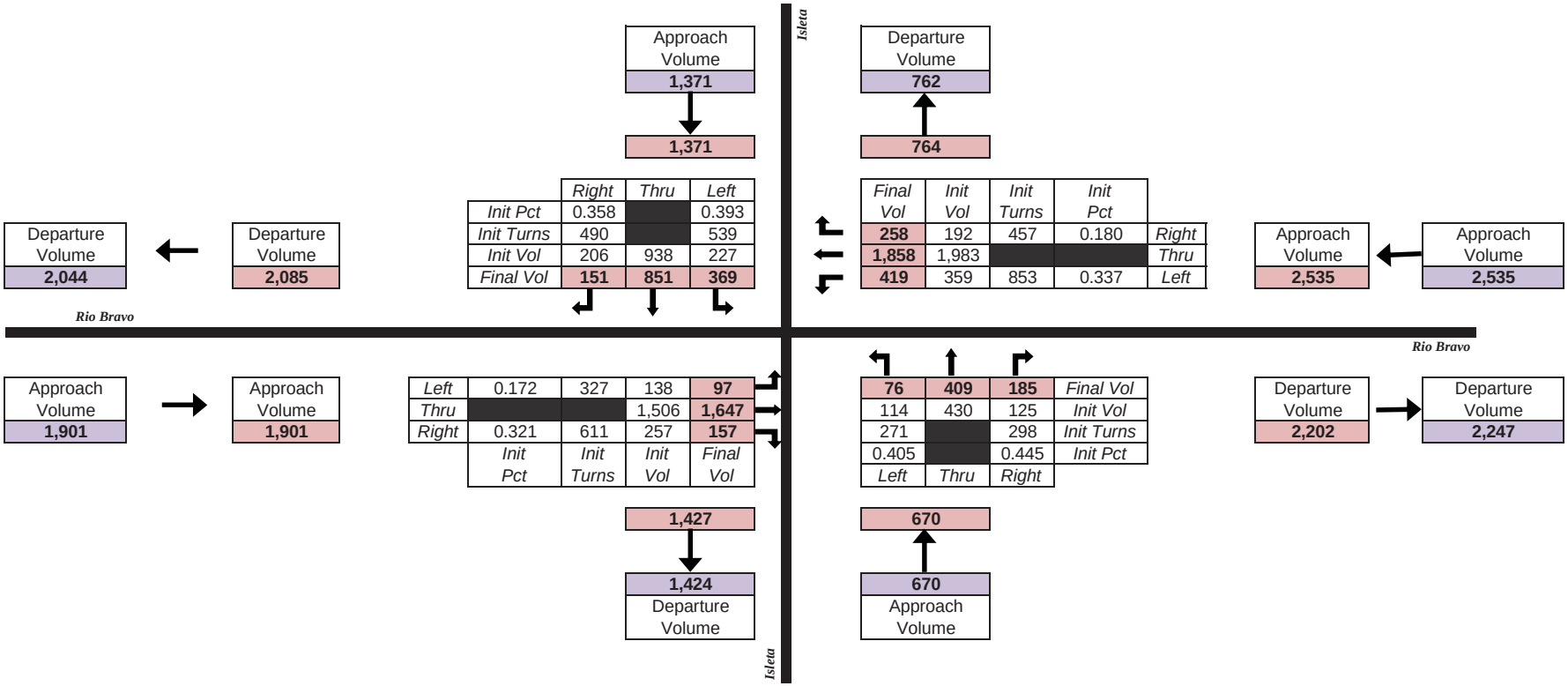

WORKSHEET

Peak-Hour Turning Movement Worksheet	
Peak Period (AM or PM)	AM: 3771
North/South Leg:	Broadway
East/West leg:	Rio Bravo
SCENARIO:	2040

et
nent Volumes

re to control overall turning volumes

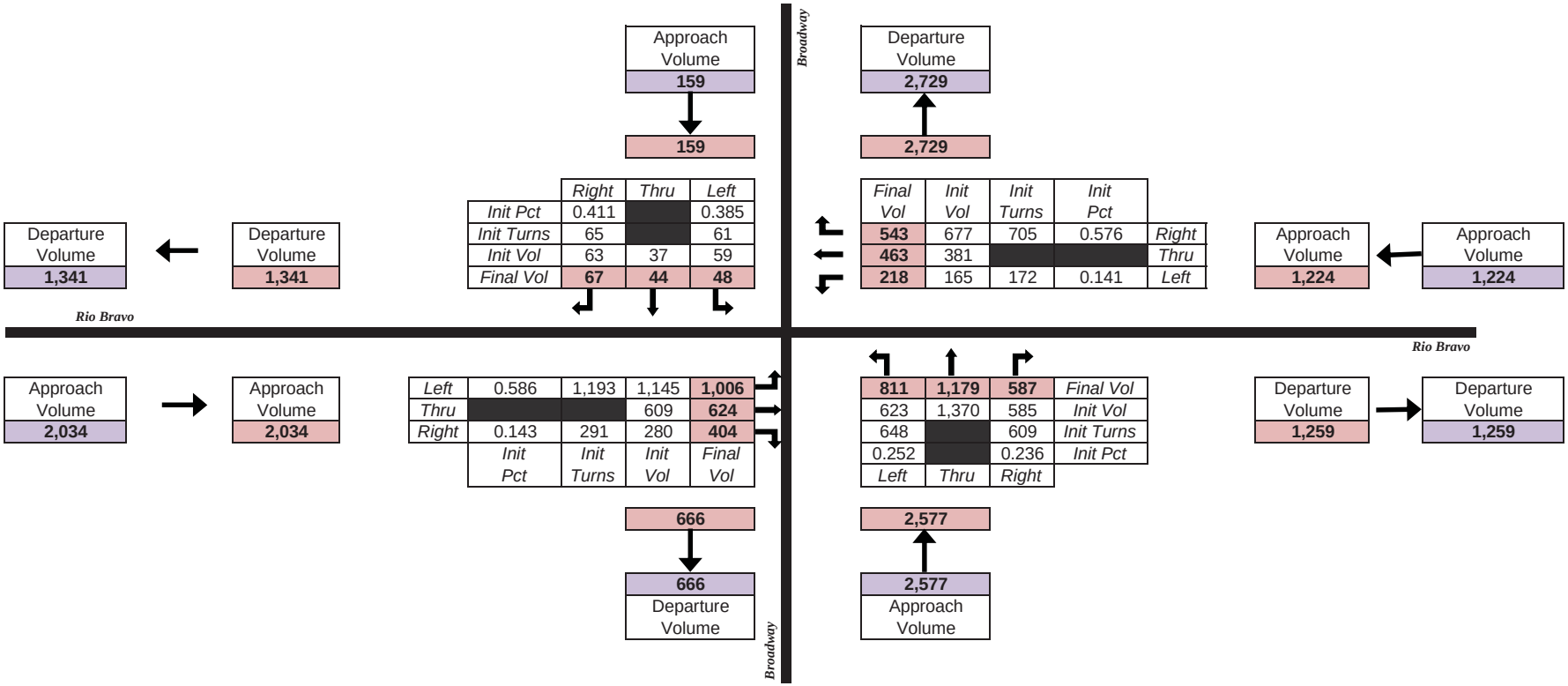

WORKSHEET

Peak-Hour Turning Movement Worksheet	
Peak Period (AM or PM)	PM: 3771
North/South Leg:	Broadway
East/West leg:	Rio Bravo
SCENARIO:	2040

et
nent Volumes

re to control overall turning volumes

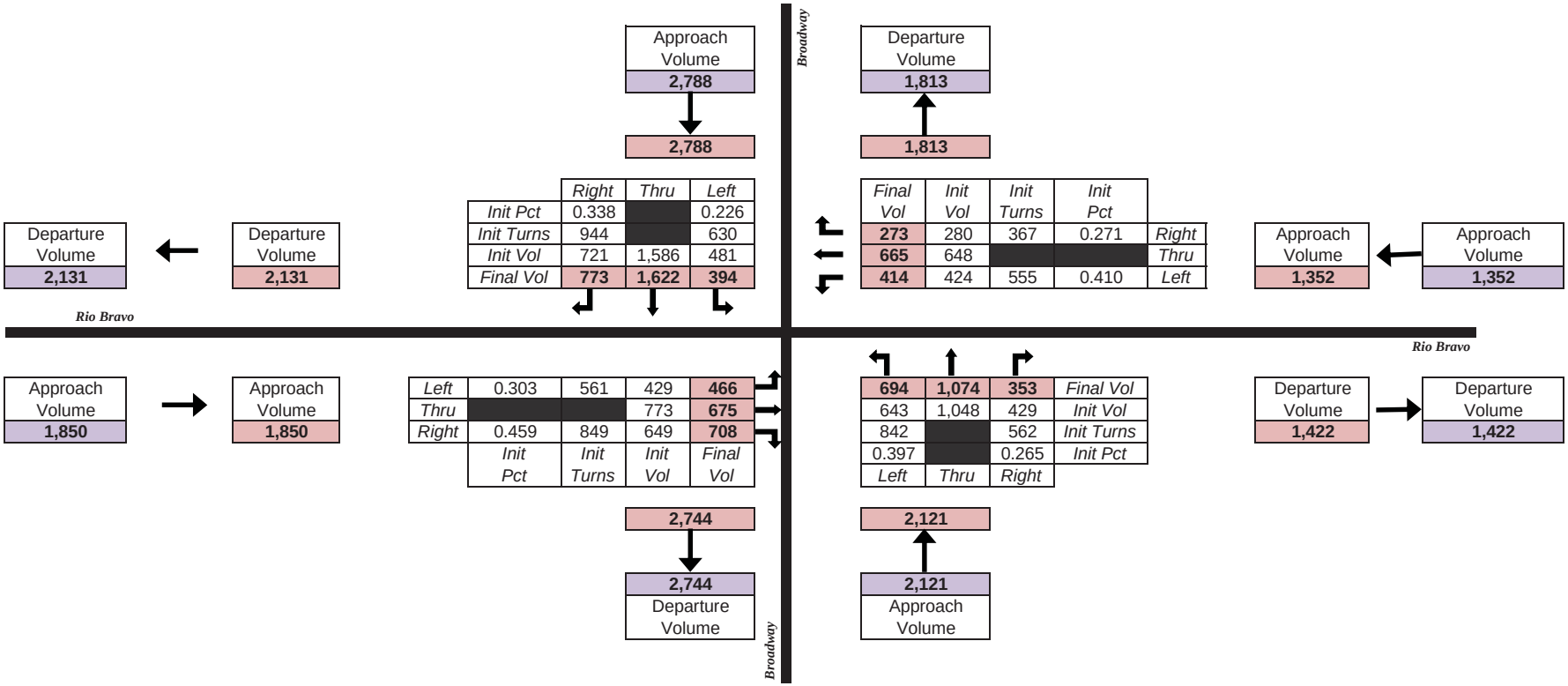

WORKSHEET

Peak-Hour Turning Movement Worksheet	
Peak Period (AM or PM)	AM: 3788
North/South Leg:	Unser
East/West leg:	Gun Club
SCENARIO:	2040

et
nent Volumes

re to control overall turning volumes

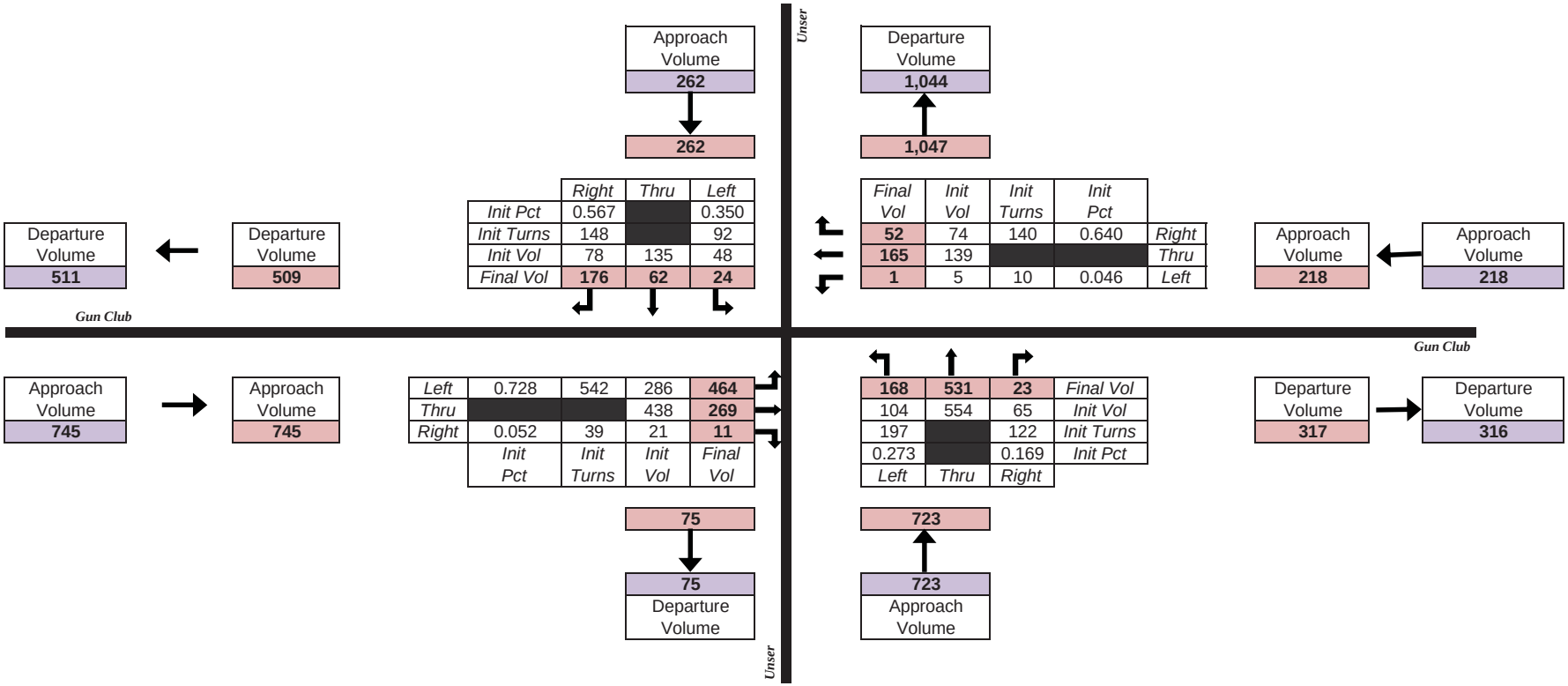

WORKSHEET

Peak-Hour Turning Movement Worksheet	
Peak Period (AM or PM)	PM: 3788
North/South Leg:	Unser
East/West leg:	Gun Club
SCENARIO:	2040

et
nent Volumes

re to control overall turning volumes

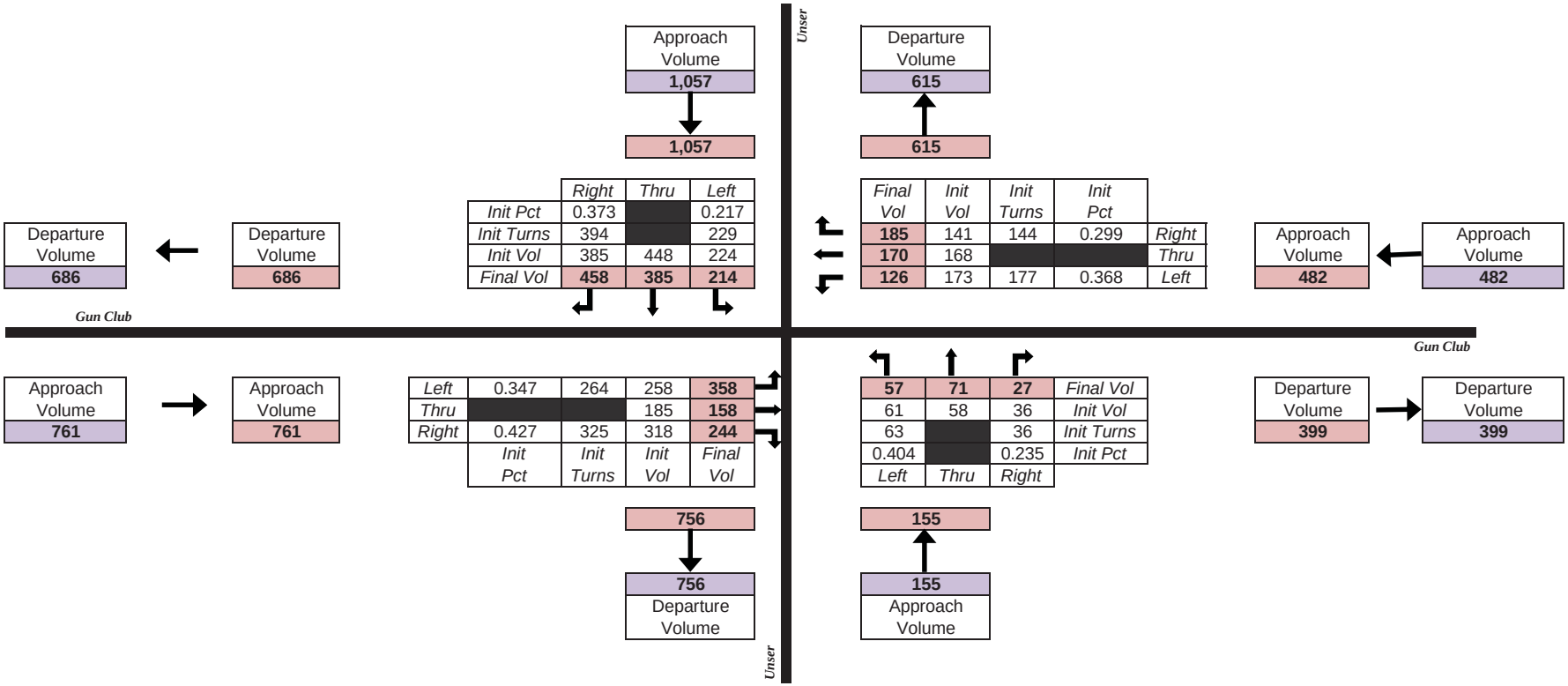

WORKSHEET

Peak-Hour Turning Movement Worksheet	
Peak Period (AM or PM)	AM: 3791
North/South Leg:	Coors
East/West leg:	Gun Club
SCENARIO:	2040

et
nent Volumes

re to control overall turning volumes

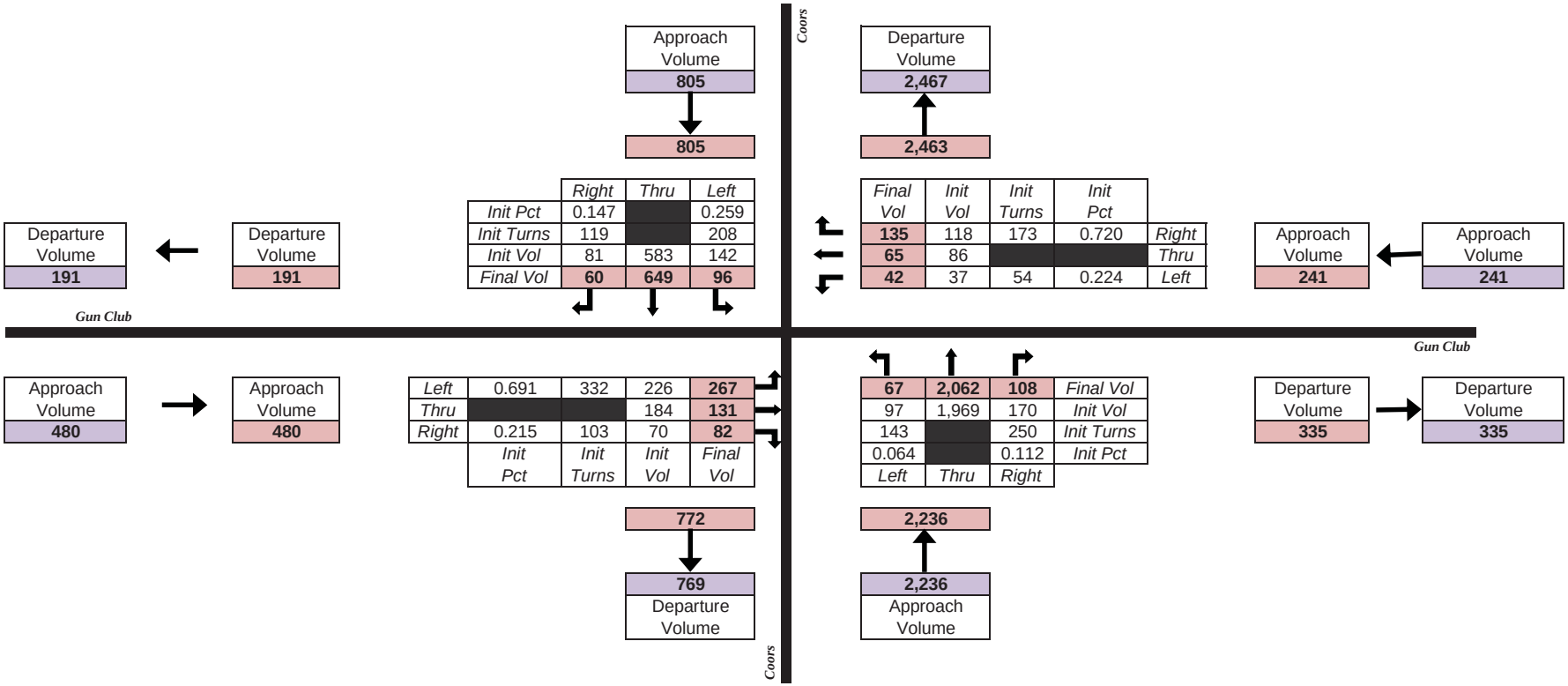

WORKSHEET

Peak-Hour Turning Movement Worksheet	
Peak Period (AM or PM)	PM: 3791
North/South Leg:	Coors
East/West leg:	Gun Club
SCENARIO:	2040

et
nent Volumes

re to control overall turning volumes

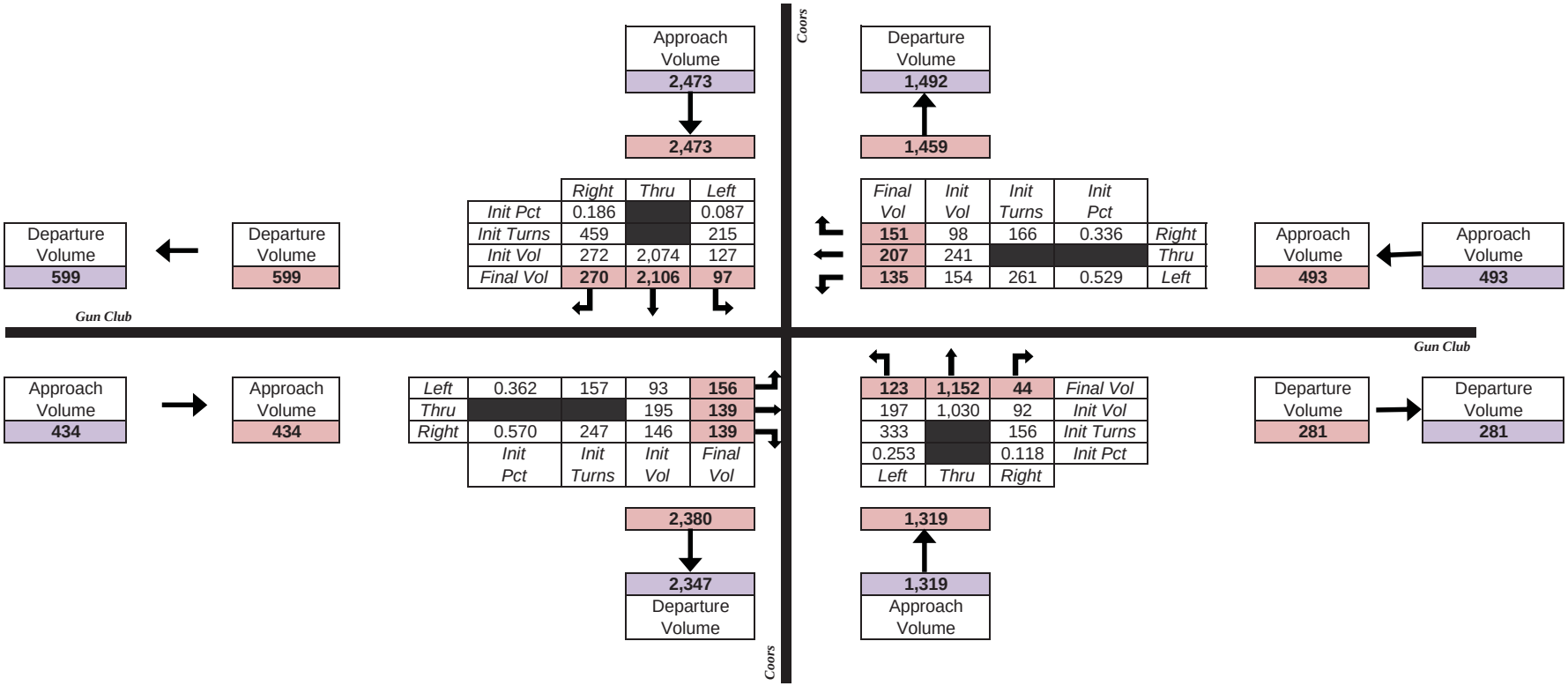

WORKSHEET

Peak-Hour Turning Movement Worksheet	
Peak Period (AM or PM)	AM: 3794
North/South Leg:	Isleta
East/West leg:	Gun Club
SCENARIO:	2040

et
nent Volumes

re to control overall turning volumes

Isleta

Approach Volume **267**

267

Departure Volume **1,370**

1,340

	Right	Thru	Left
Init Pct	0.266		0.000
Init Turns	71		0
Init Vol	62	205	0
Final Vol	**63**	**204**	**0**

Final Vol	Init Vol	Init Turns	Init Pct	
0	0	0	0.837	Right
0	0			Thru
0	0	0	0.120	Left

Departure Volume **71**

Departure Volume **78**

Approach Volume **0**

Approach Volume **0**

Gun Club

Gun Club

Approach Volume **346**

Approach Volume **346**

Left	0.875	303	265	**331**
Thru			43	**0**
Right	0.125	43	38	**15**
	Init Pct	Init Turns	Init Vol	Final Vol

15	**1,009**	**0**	Final Vol
44	980	0	Init Vol
50		0	Init Turns
0.049		0.000	Init Pct
Left	Thru	Right	

Departure Volume **0**

Departure Volume **0**

219

196
Departure Volume

1,024

1,024
Approach Volume

Isleta

WORKSHEET

Peak-Hour Turning Movement Worksheet	
Peak Period (AM or PM)	PM: 3794
North/South Leg:	Isleta
East/West leg:	Gun Club
SCENARIO:	2040

et
nent Volumes

re to control overall turning volumes

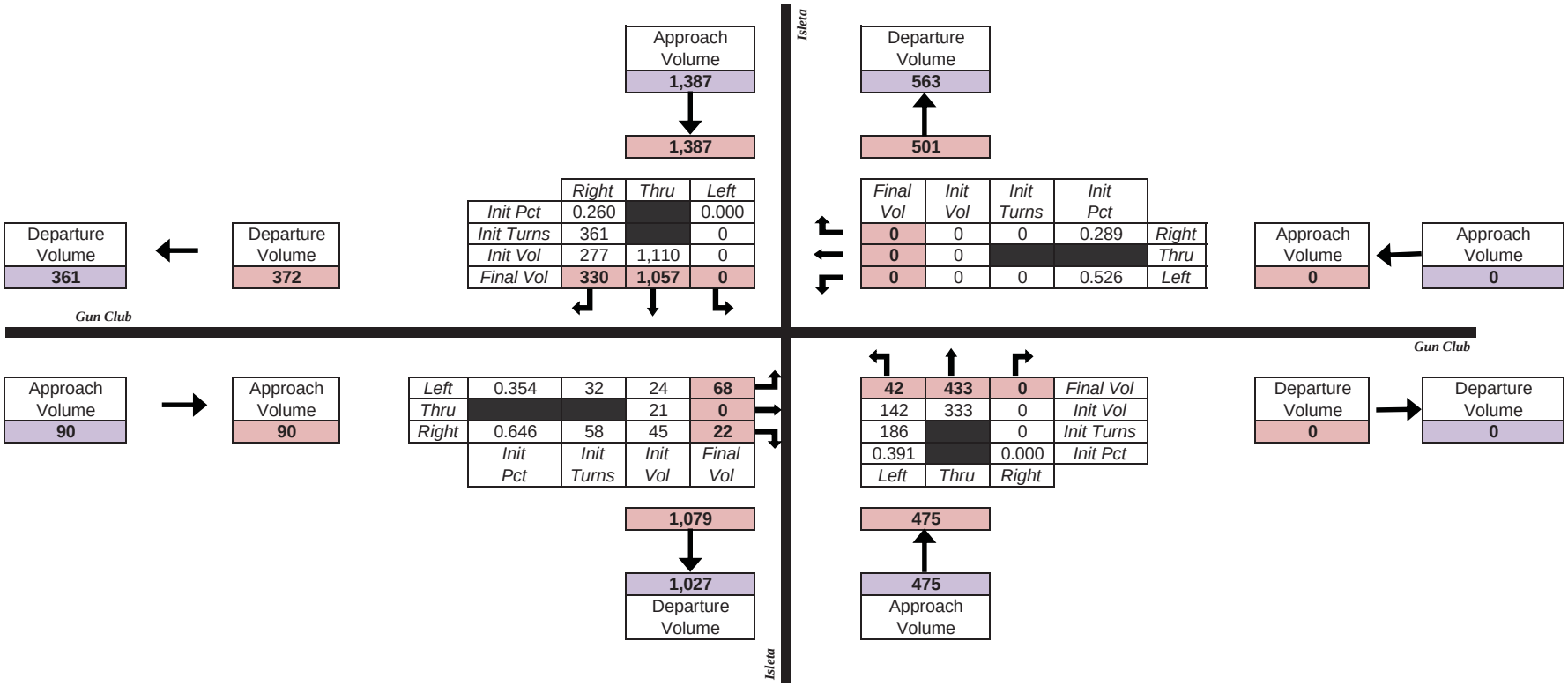

KSHEET

Peak-Hour Turning Movement Worksheet	
Peak Period (AM or PM)	AM: 5756
North/South Leg:	Atrisco Vista
East/West leg:	I-40 WB Ramps
SCENARIO:	2040

mes

trol overall turning volumes

Atrisco Vista

Approach Volume **1,221**

1,221

Departure Volume **690**

741

	Right	Thru	Left
Init Pct	0.038		0.000
Init Turns	46		0
Init Vol	44	1,177	0
Final Vol	**15**	**1,206**	**0**

Final Vol	Init Vol	Init Turns	Init Pct	
96	220	233	0.246	*Right*
0	0			*Thru*
851	674	714	0.754	*Left*

ture me

Departure Volume **88**

Approach Volume **947**

Ap V

I-40 WB Ramps

I-40 WB Ramps

ach me

Approach Volume **0**

Left	0.246	0	0	**0**
Thru			0	**0**
Right	0.754	0	0	**0**
	Init Pct	*Init Turns*	*Init Vol*	*Final Vol*

73	**645**	**0**	*Final Vol*
73	645	0	*Init Vol*
77		0	*Init Turns*
0.107		0.000	*Init Pct*
Left	*Thru*	*Right*	

Departure Volume **0**

De V

2,057

2,113
Departure Volume

718

718
Approach Volume

Atrisco Vista

KSHEET

Peak-Hour Turning Movement Worksheet	
Peak Period (AM or PM)	PM: 5756
North/South Leg:	Atrisco Vista
East/West leg:	I-40 WB Ramps
SCENARIO:	2040

mes

trol overall turning volumes

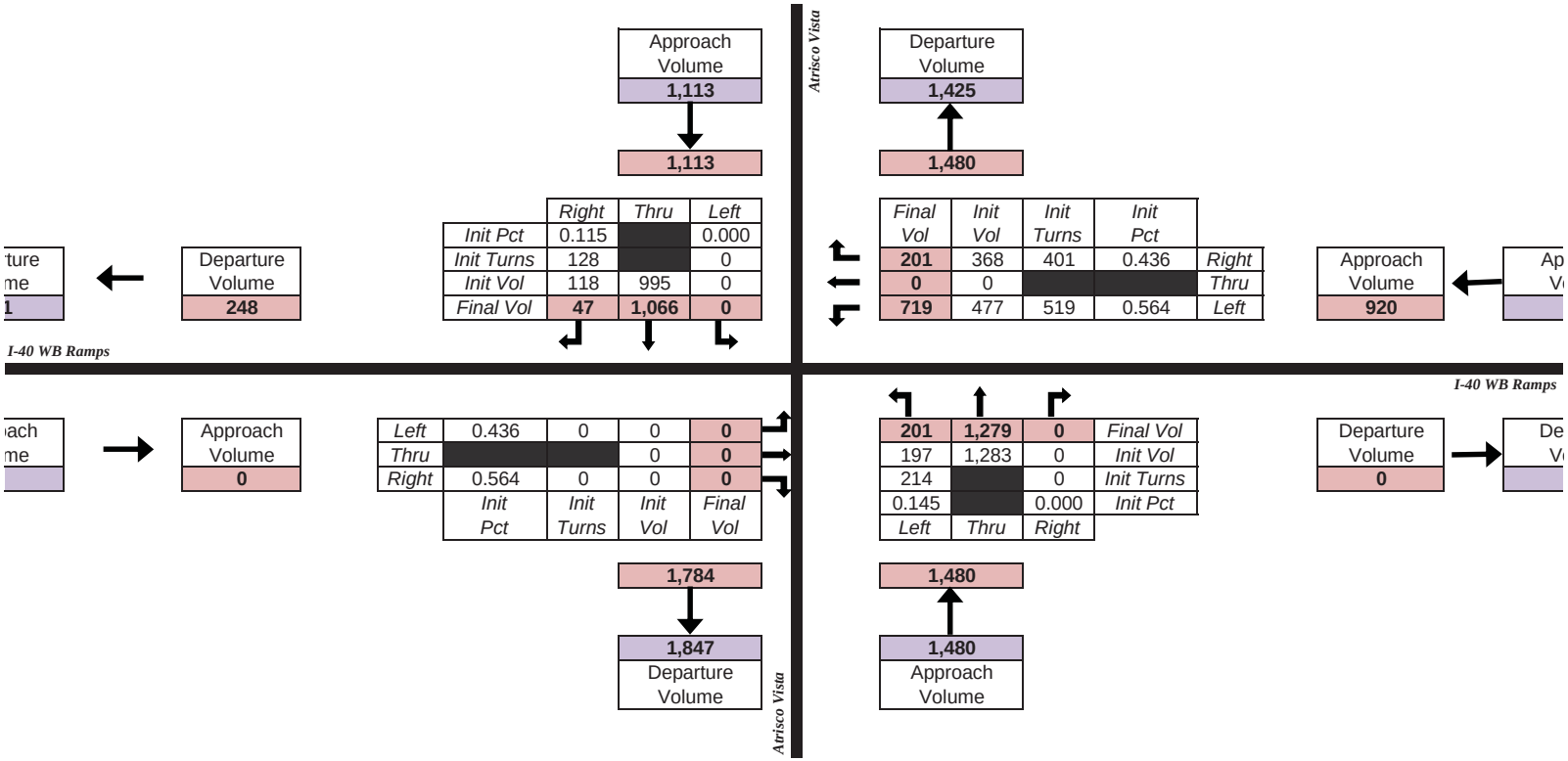

KSHEET

Peak-Hour Turning Movement Worksheet	
Peak Period (AM or PM)	AM: 3591
North/South Leg:	Atrisco Vista
East/West leg:	I-40 EB Ramps
SCENARIO:	2040

mes

trol overall turning volumes

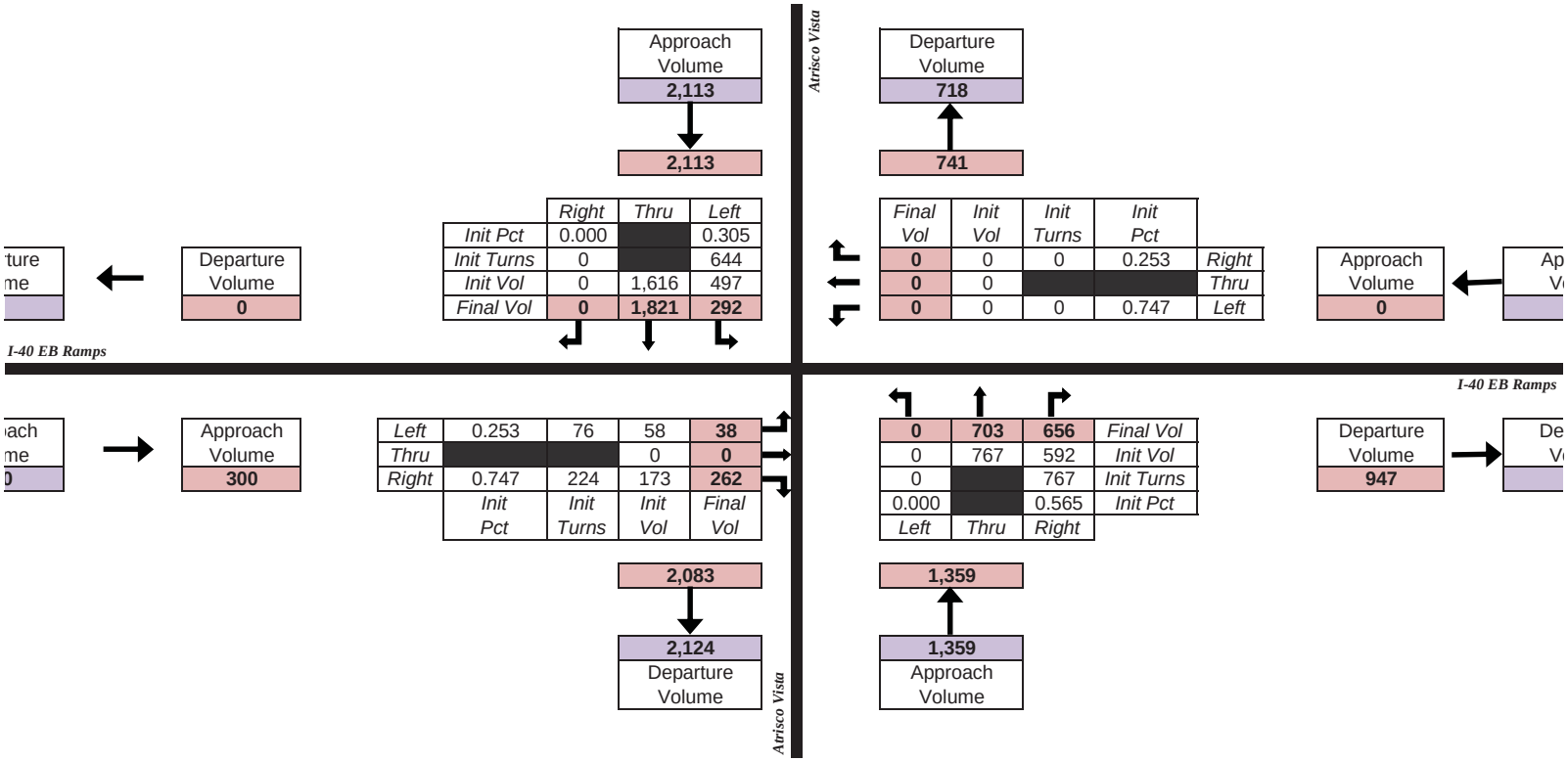

KSHEET

Peak-Hour Turning Movement Worksheet	
Peak Period (AM or PM)	PM: 3591
North/South Leg:	Atrisco Vista
East/West leg:	I-40 EB Ramps
SCENARIO:	2040

mes

trol overall turning volumes

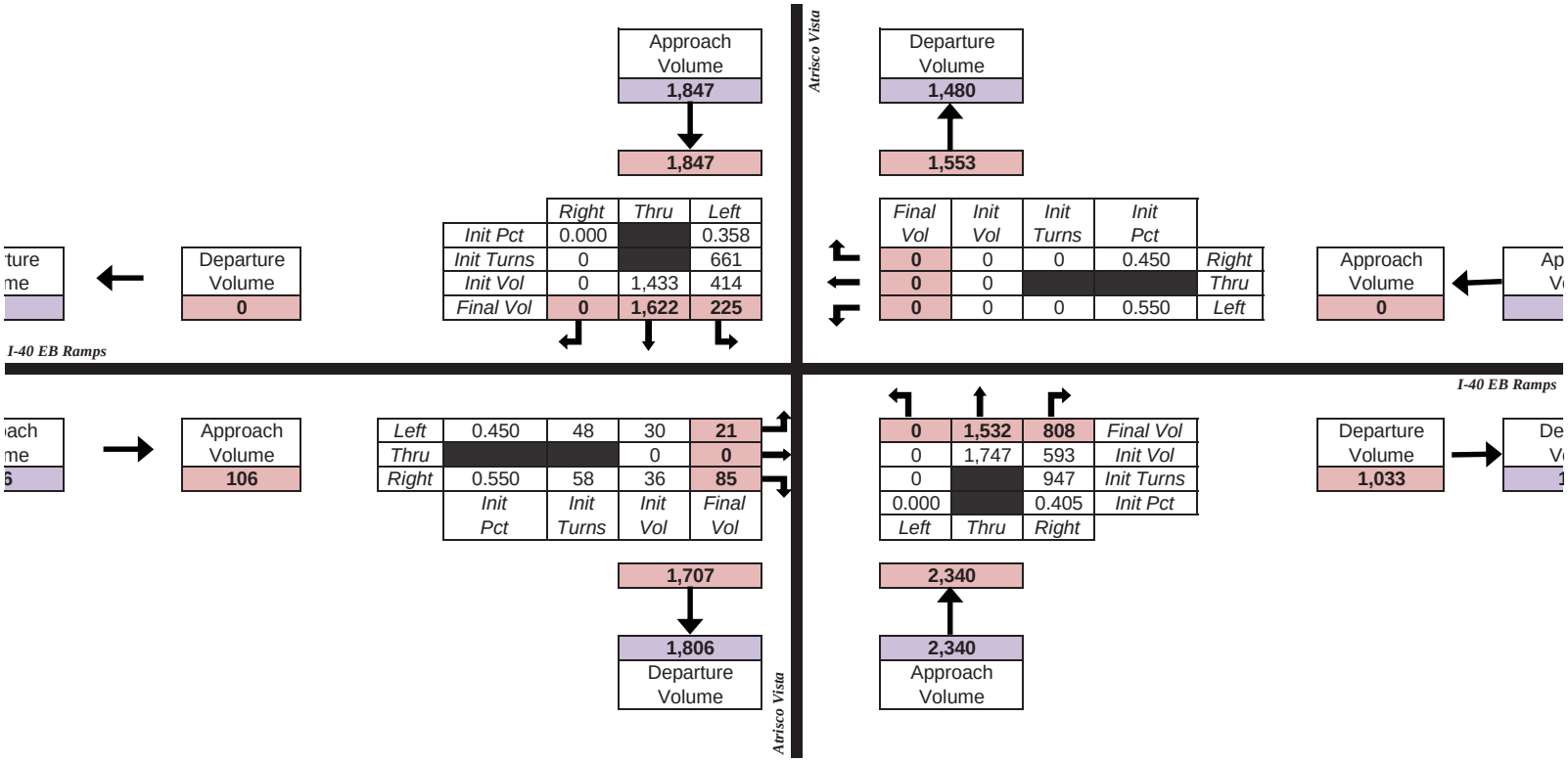

KSHEET

Peak-Hour Turning Movement Worksheet	
Peak Period (AM or PM)	AM: 3604
North/South Leg:	Atrisco Vista
East/West leg:	Central
SCENARIO:	2040

mes

trol overall turning volumes

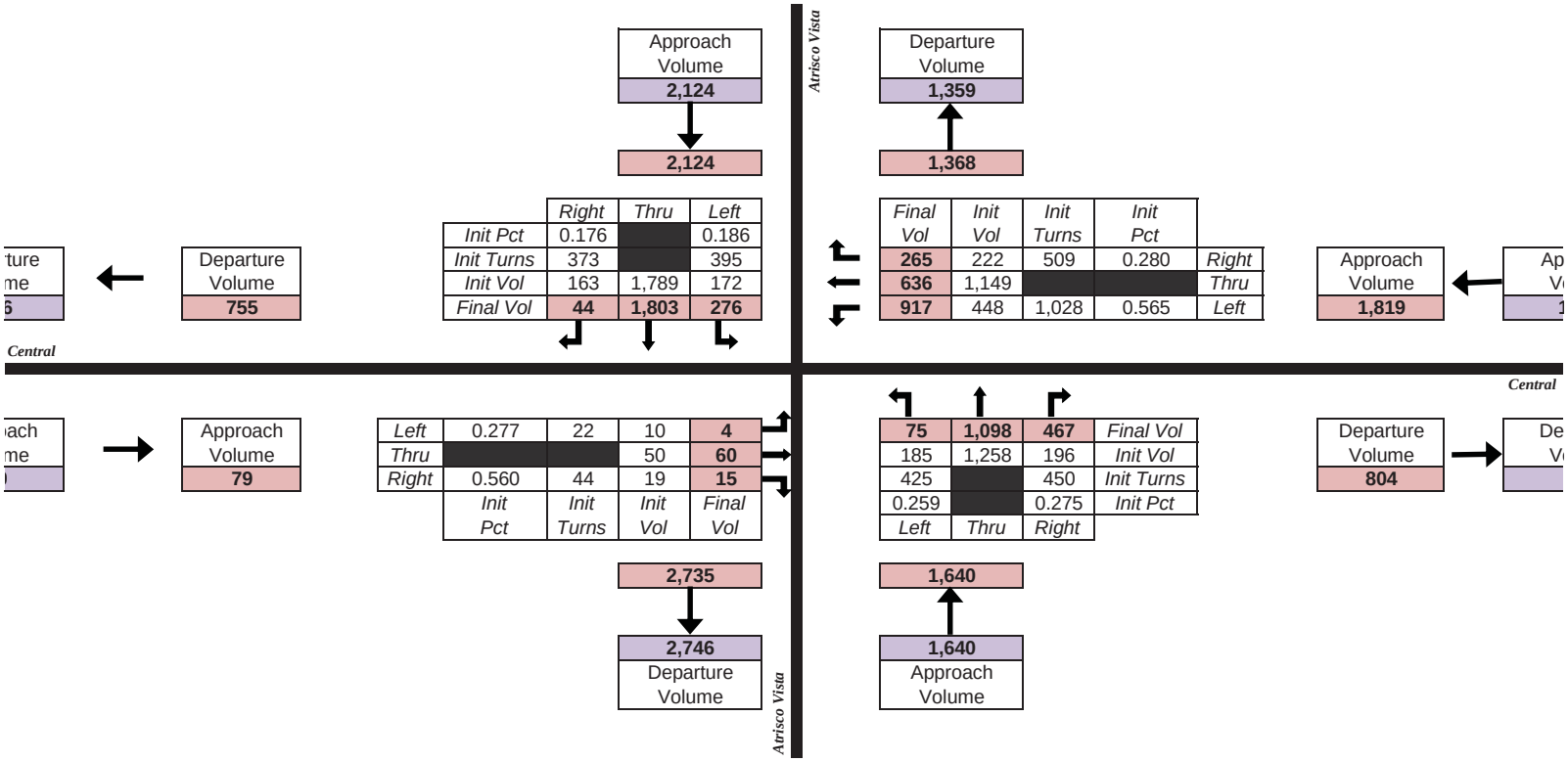

	Right	Thru	Left
Init Pct	0.176		0.186
Init Turns	373		395
Init Vol	163	1,789	172
Final Vol	44	1,803	276

Final Vol	Init Vol	Init Turns	Init Pct	
265	222	509	0.280	Right
636	1,149			Thru
917	448	1,028	0.565	Left

Left	0.277	22	10	4
Thru			50	60
Right	0.560	44	19	15
	Init Pct	Init Turns	Init Vol	Final Vol

75	1,098	467	Final Vol
185	1,258	196	Init Vol
425		450	Init Turns
0.259		0.275	Init Pct
Left	Thru	Right	

KSHEET

Peak-Hour Turning Movement Worksheet	
Peak Period (AM or PM)	PM: 3604
North/South Leg:	Atrisco Vista
East/West leg:	Central
SCENARIO:	2040

mes

trol overall turning volumes

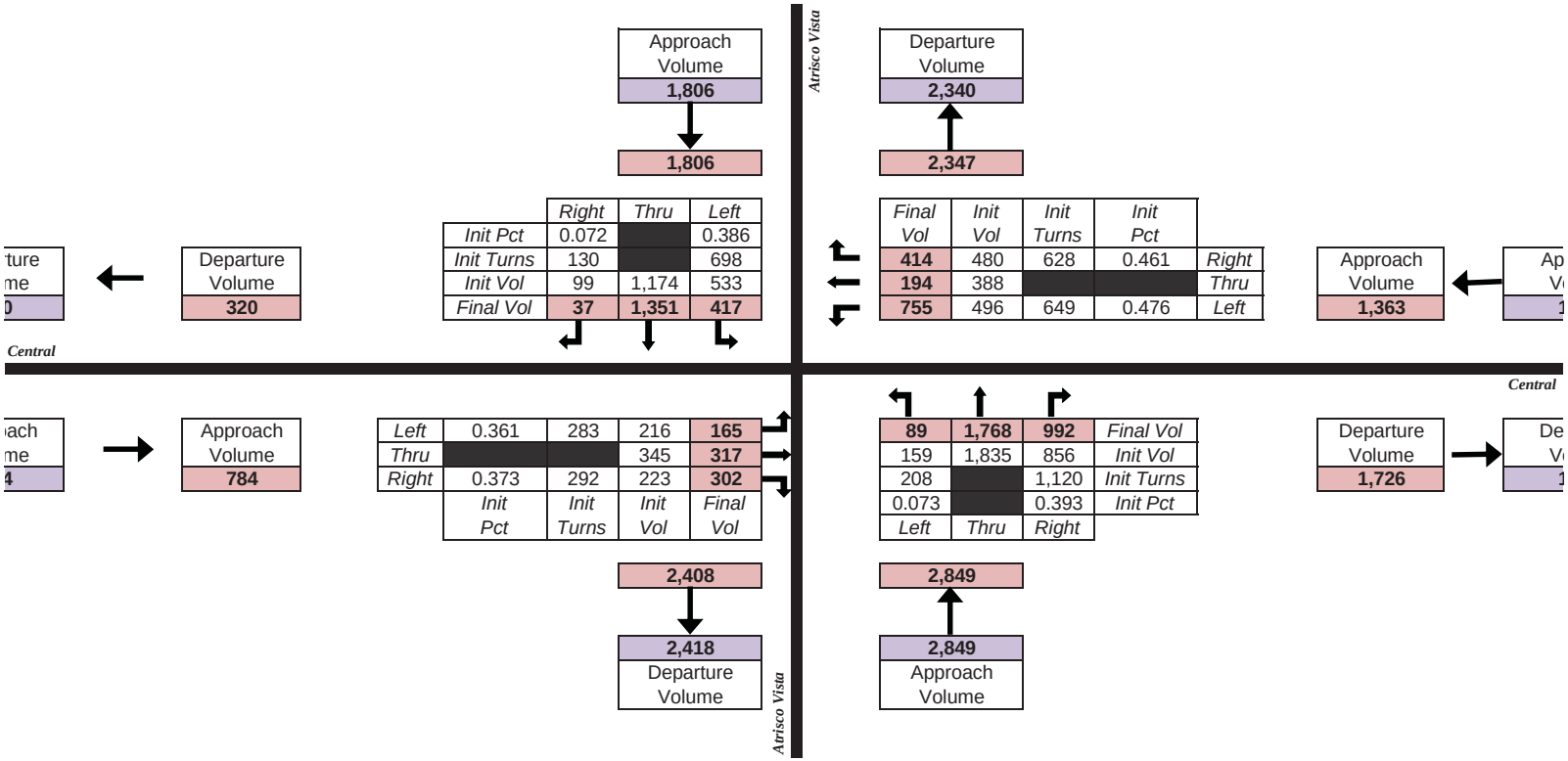

KSHEET

Peak-Hour Turning Movement Worksheet	
Peak Period (AM or PM)	AM: 5616
North/South Leg:	Paseo de Volcan
East/West leg:	I-40 WB Ramps
SCENARIO:	2040

mes

trol overall turning volumes

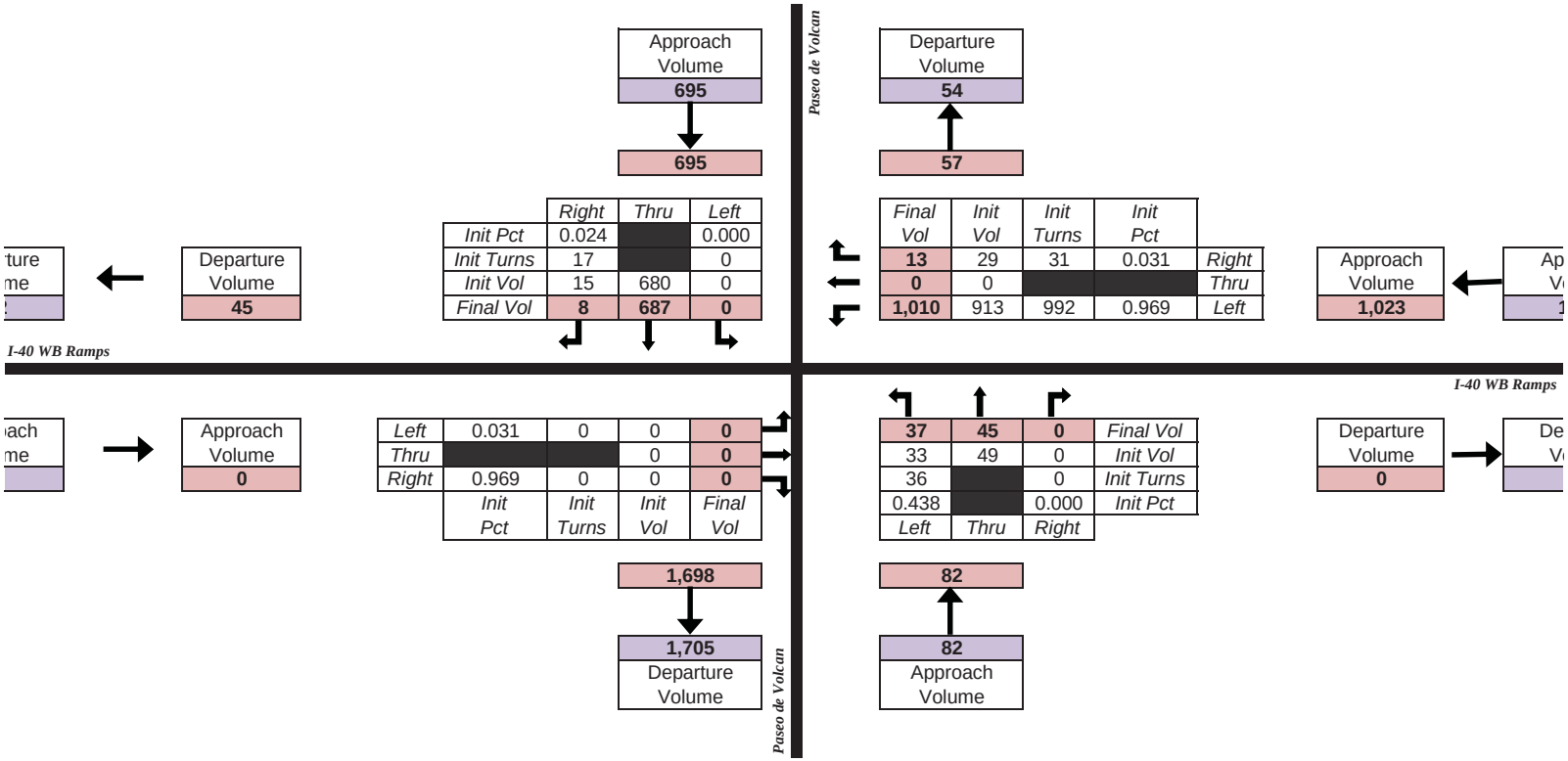

KSHEET

Peak-Hour Turning Movement Worksheet	
Peak Period (AM or PM)	PM: 5616
North/South Leg:	Paseo de Volcan
East/West leg:	I-40 WB Ramps
SCENARIO:	2040

mes

trol overall turning volumes

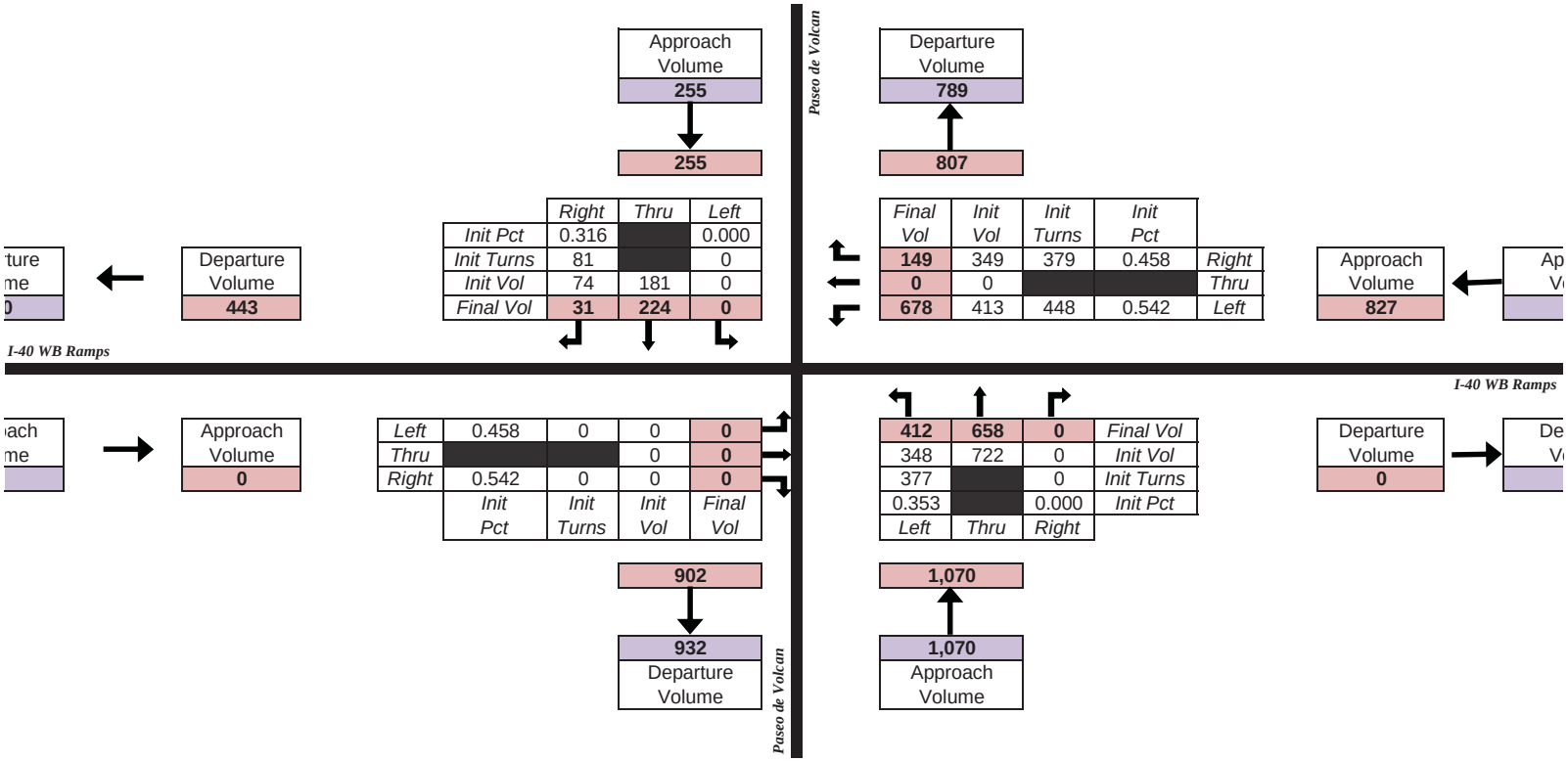

KSHEET

Peak-Hour Turning Movement Worksheet	
Peak Period (AM or PM)	AM: 10272
North/South Leg:	Paseo de Volcan
East/West leg:	I-40 EB Ramps
SCENARIO:	2040

mes

trol overall turning volumes

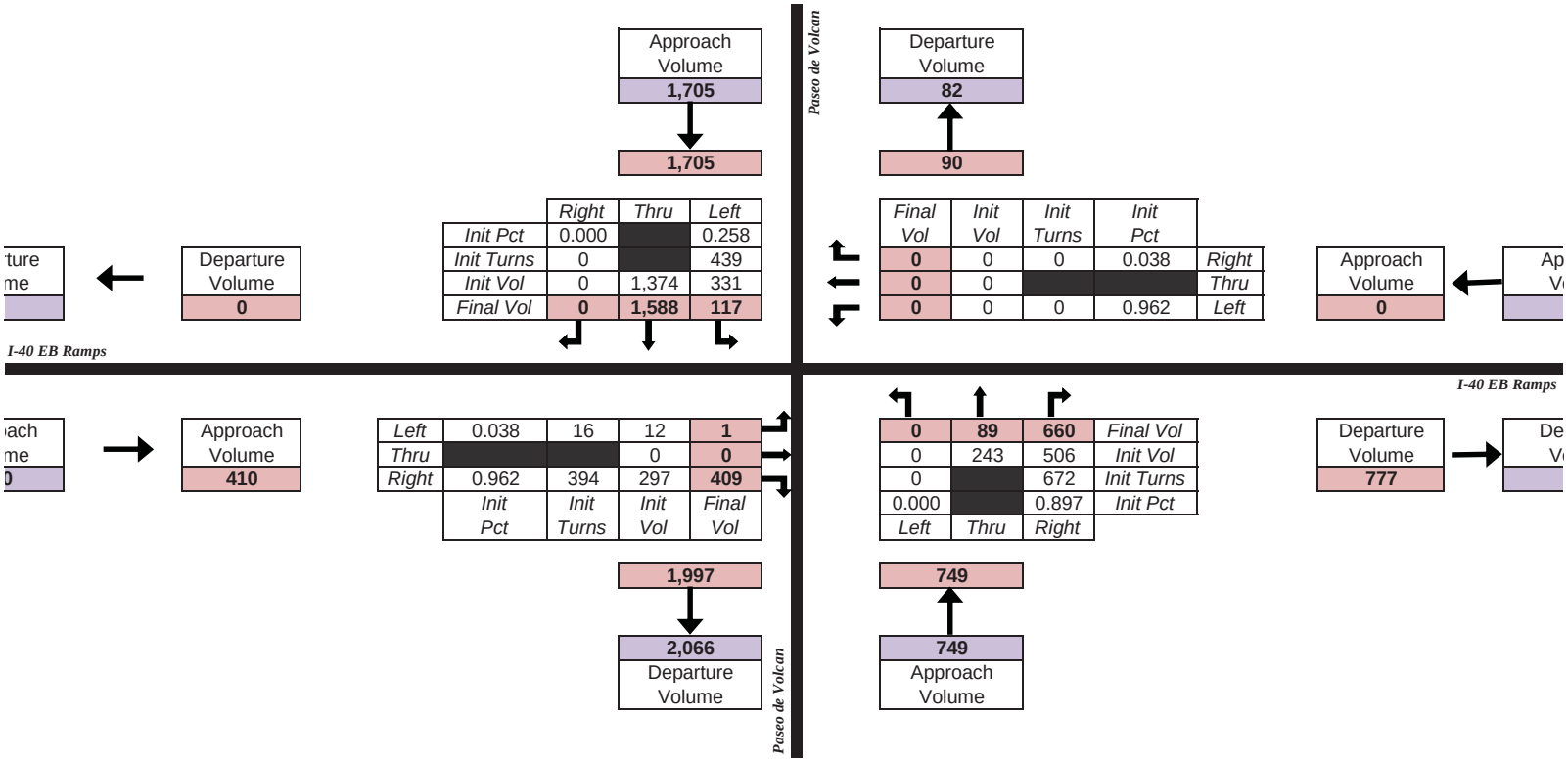

KSHEET

Peak-Hour Turning Movement Worksheet	
Peak Period (AM or PM)	PM: 10272
North/South Leg:	Paseo de Volcan
East/West leg:	I-40 EB Ramps
SCENARIO:	2040

mes

trol overall turning volumes

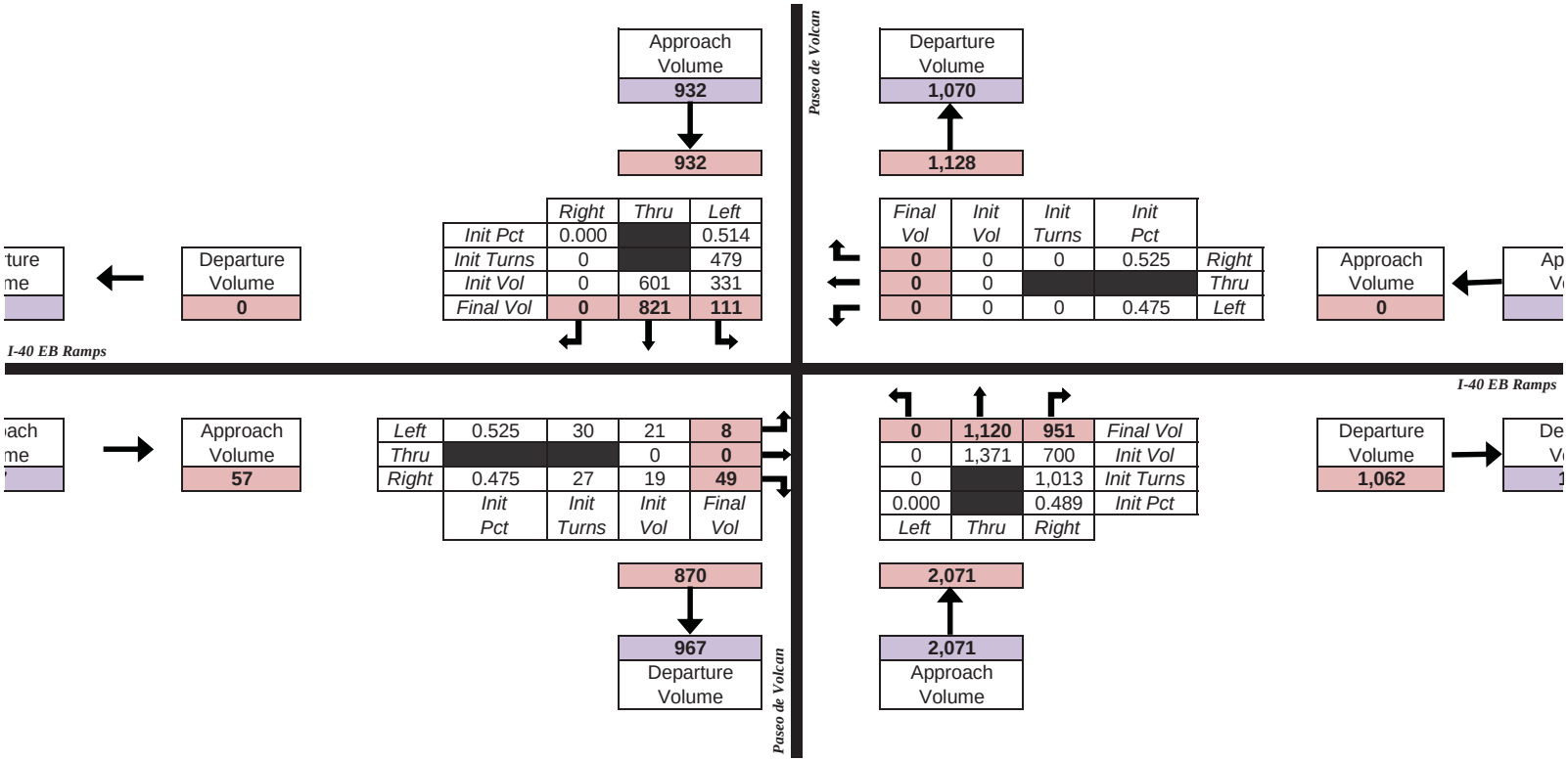

KSHEET

Peak-Hour Turning Movement Worksheet	
Peak Period (AM or PM)	AM: 10273
North/South Leg:	Paseo de Volcan
East/West leg:	Central
SCENARIO:	2040

mes

trol overall turning volumes

Approach Volume **2,066**

2,066

Departure Volume **749**

713

	Right	Thru	Left
Init Pct	0.210		0.092
Init Turns	434		191
Init Vol	212	1,761	93
Final Vol	**243**	**1,650**	**173**

Final Vol	*Init Vol*	*Init Turns*	*Init Pct*	
90	46	94	0.255	*Right*
202	221			*Thru*
78	104	212	0.573	*Left*

ture me 3

Departure Volume **509**

Approach Volume **370**

Ap V

Central

Central

ach me

Approach Volume **10**

Left	0.282	3	1	**2**
Thru			6	**6**
Right	0.634	6	3	**2**
	Init Pct	*Init Turns*	*Init Vol*	*Final Vol*

64	**621**	**46**	*Final Vol*
123	555	54	*Init Vol*
251		110	*Init Turns*
0.343		0.151	*Init Pct*
Left	*Thru*	*Right*	

Departure Volume **225**

De V

1,729

1,686
Departure Volume

731

731
Approach Volume

Paseo de Volcan

Paseo de Volcan

KSHEET

Peak-Hour Turning Movement Worksheet	
Peak Period (AM or PM)	PM: 10273
North/South Leg:	Paseo de Volcan
East/West leg:	Central
SCENARIO:	2040

mes

trol overall turning volumes

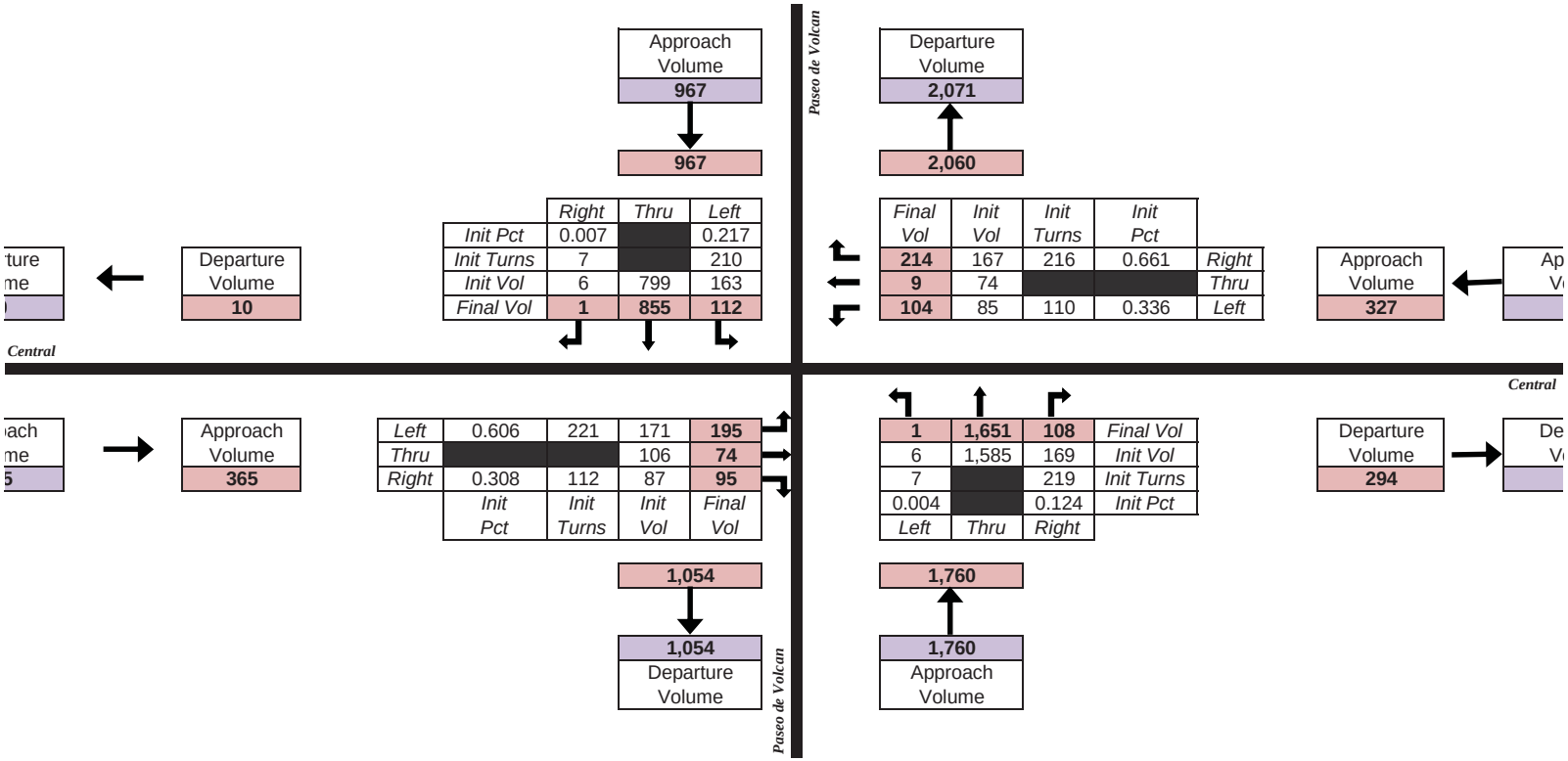

KSHEET

Peak-Hour Turning Movement Worksheet	
Peak Period (AM or PM)	AM: 10022
North/South Leg:	Atrisco Vista
East/West leg:	Eucharis
SCENARIO:	2040

mes

trol overall turning volumes

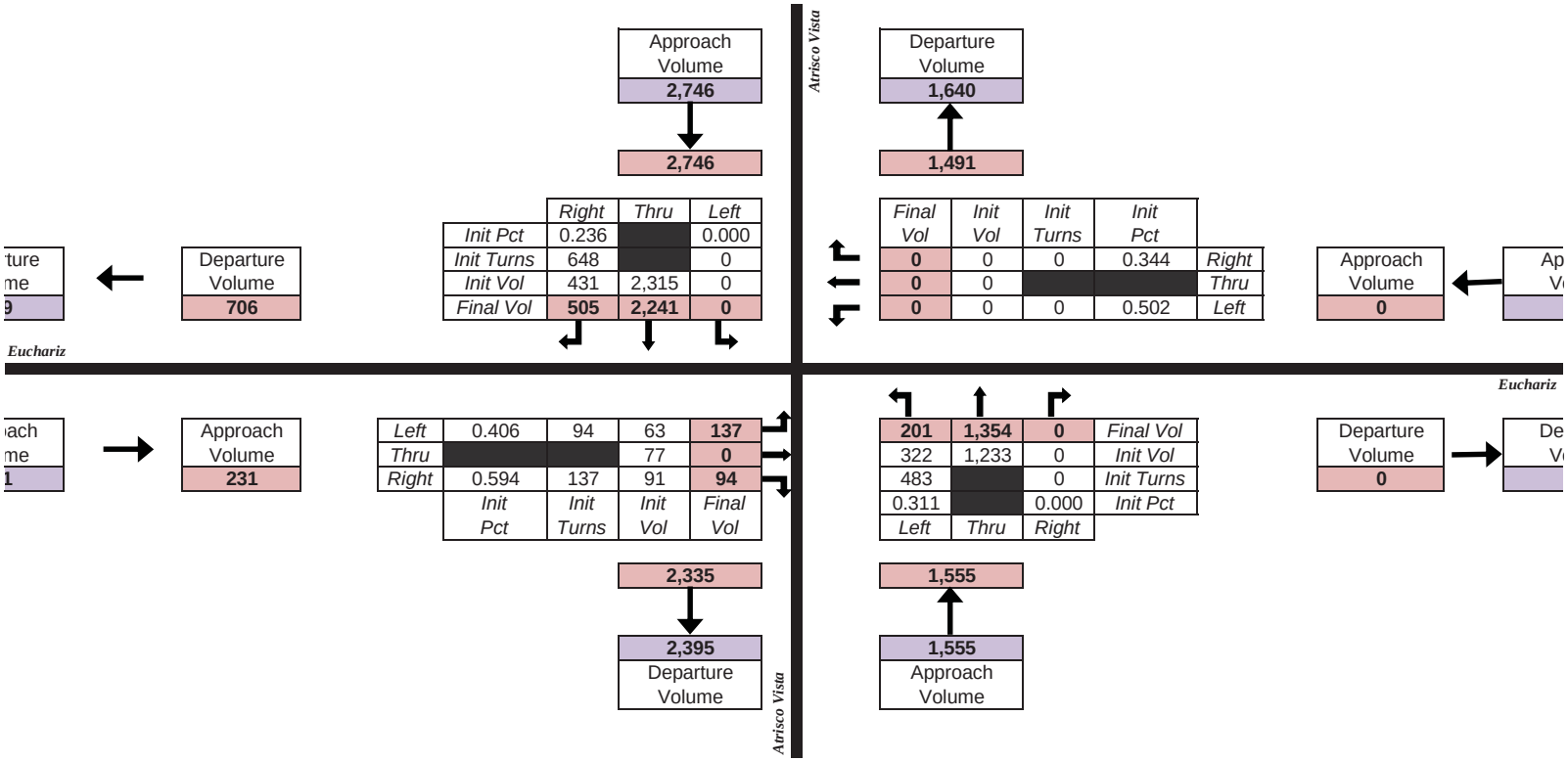

KSHEET

Peak-Hour Turning Movement Worksheet	
Peak Period (AM or PM)	PM: 10022
North/South Leg:	Atrisco Vista
East/West leg:	Eucharis
SCENARIO:	2040

mes

trol overall turning volumes

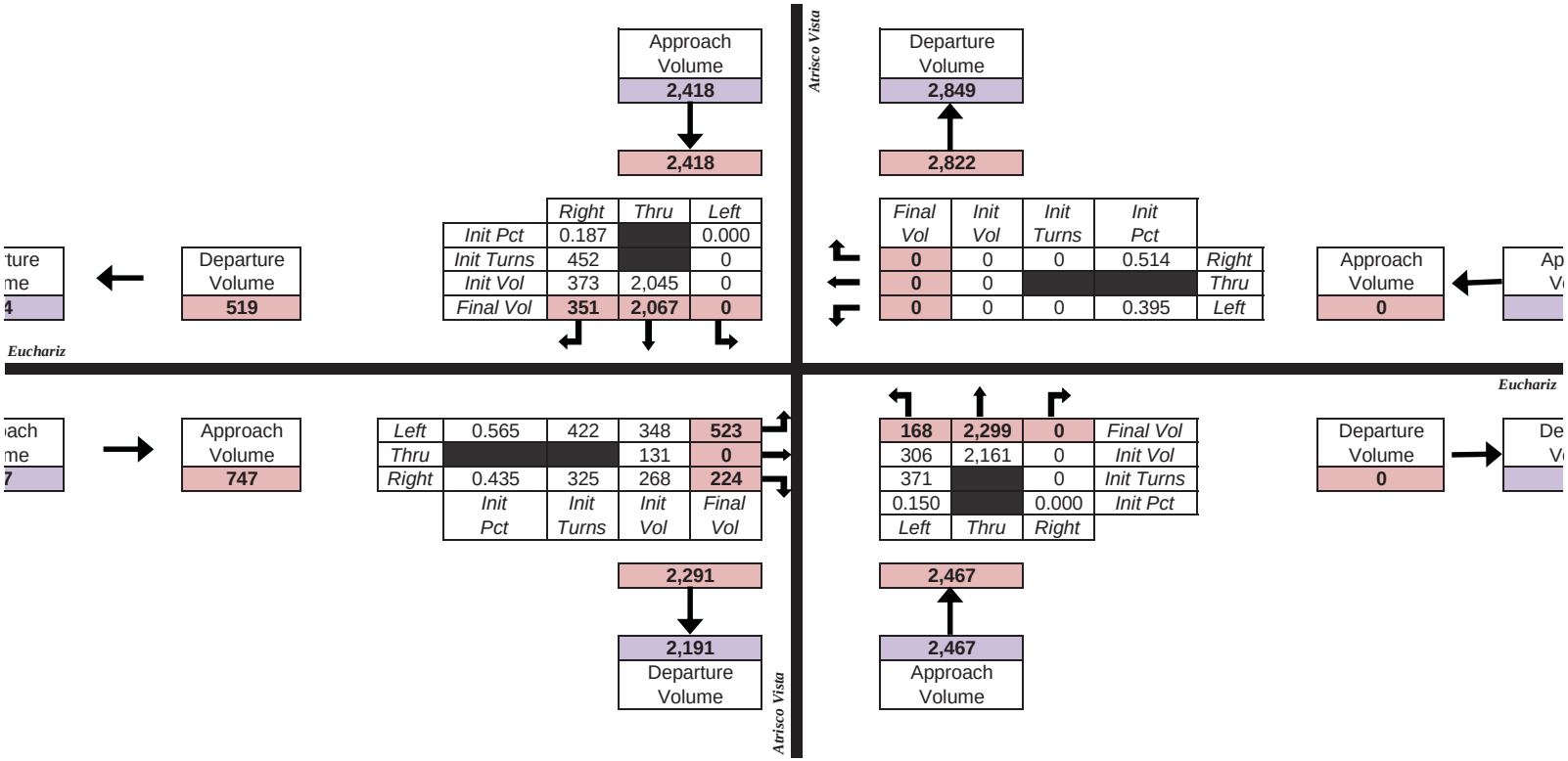

KSHEET

Peak-Hour Turning Movement Worksheet	
Peak Period (AM or PM)	AM: 10054
North/South Leg:	Atrisco Vista
East/West leg:	Gibson
SCENARIO:	2040

mes

trol overall turning volumes

Atrisco Vista

Approach Volume **2,127**

2,127

Departure Volume **1,275**

1,310

	Right	Thru	Left
Init Pct	0.069		0.100
Init Turns	148		212
Init Vol	110	1,859	158
Final Vol	**35**	**1,995**	**97**

Final Vol	Init Vol	Init Turns	Init Pct	
171	219	294	0.293	*Right*
127	297			*Thru*
705	487	654	0.652	*Left*

ture me **7**

Departure Volume **238**

Approach Volume **1,003**

Ap V 1

Gibson

Gibson

ach me **7**

Approach Volume **157**

Left	0.286	45	33	**23**
Thru			49	**37**
Right	0.637	100	75	**97**
	Init Pct	*Init Turns*	*Init Vol*	*Final Vol*

76	**1,116**	**212**	*Final Vol*
134	1,078	192	*Init Vol*
180		258	*Init Turns*
0.128		0.184	*Init Pct*
Left	*Thru*	*Right*	

Departure Volume **345**

De V

2,798

2,839
Departure Volume

1,404

1,404
Approach Volume

Atrisco Vista

KSHEET

Peak-Hour Turning Movement Worksheet	
Peak Period (AM or PM)	PM: 10054
North/South Leg:	Atrisco Vista
East/West leg:	Gibson
SCENARIO:	2040

mes

trol overall turning volumes

Approach Volume **1,892**

1,892

Departure Volume **1,922**

1,954

	Right	Thru	Left
Init Pct	0.078		0.320
Init Turns	147		605
Init Vol	90	1,430	372
Final Vol	**35**	**1,580**	**278**

Final Vol	*Init Vol*	*Init Turns*	*Init Pct*	
141	164	266	0.456	*Right*
147	248			*Thru*
296	173	281	0.482	*Left*

Atrisco Vista

Gibson

Gibson

ture
me
2

Departure Volume **262**

Approach Volume **584**

Ap
V

ach
me
2

Approach Volume **342**

Left	0.382	131	80	**57**
Thru			177	**167**
Right	0.404	138	85	**118**
	Init Pct	*Init Turns*	*Init Vol*	*Final Vol*

80	**1,756**	**638**	*Final Vol*
122	1,850	502	*Init Vol*
199		817	*Init Turns*
0.080		0.330	*Init Pct*
Left	*Thru*	*Right*	

Departure Volume **1,083**

De
V
1

1,994

2,030
Departure Volume

2,474

2,474
Approach Volume

Atrisco Vista

KSHEET

Peak-Hour Turning Movement Worksheet	
Peak Period (AM or PM)	AM: 10165
North/South Leg:	Loop Road
East/West leg:	Dennis Chavez
SCENARIO:	2040

mes

trol overall turning volumes

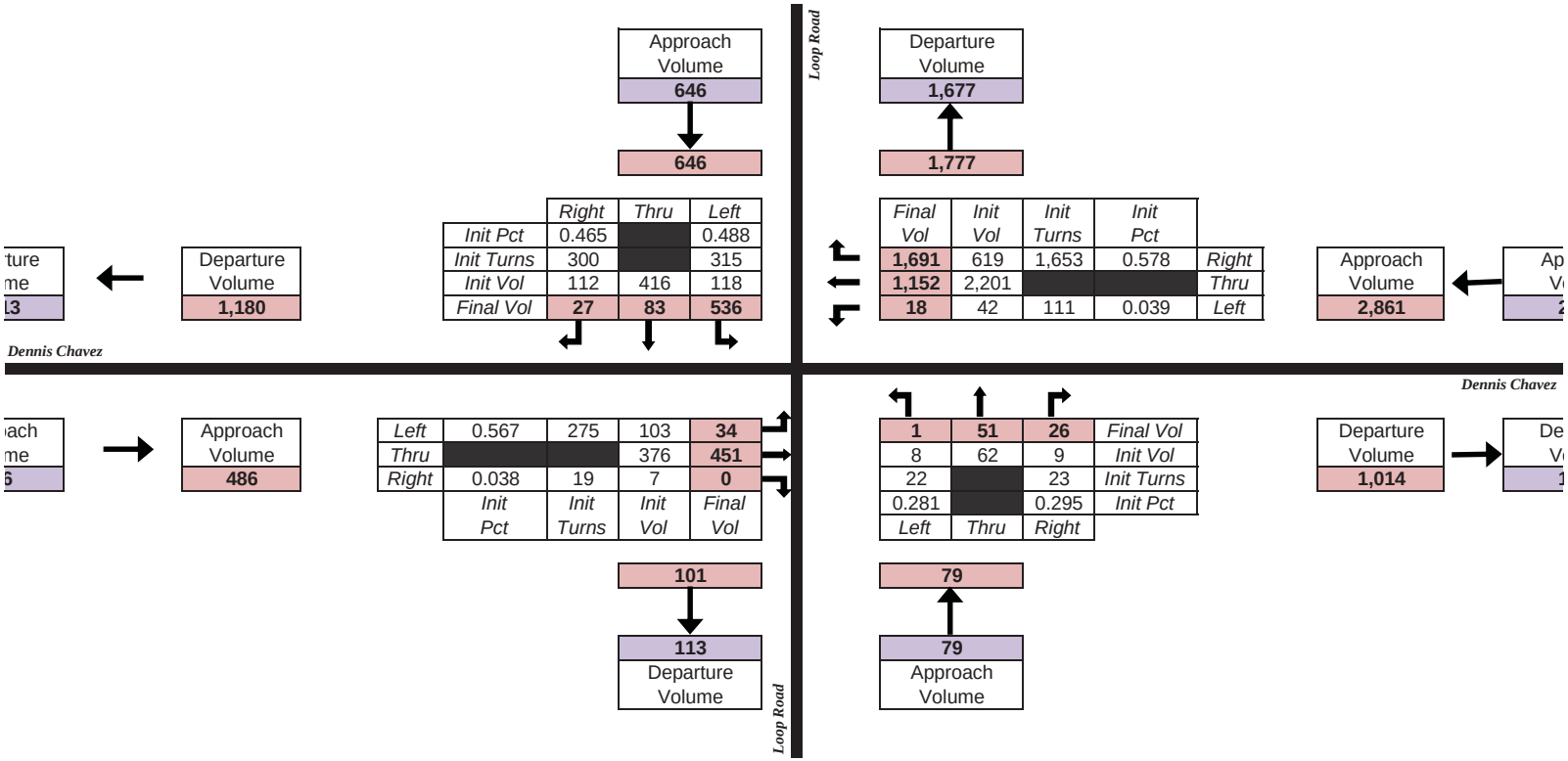

KSHEET

Peak-Hour Turning Movement Worksheet	
Peak Period (AM or PM)	PM: 10165
North/South Leg:	Loop Road
East/West leg:	Dennis Chavez
SCENARIO:	2040

mes

trol overall turning volumes

Loop Road

Approach Volume **1,698**

1,698

Departure Volume **1,271**

1,374

	Right	Thru	Left
Init Pct	0.218		0.749
Init Turns	370		1,271
Init Vol	327	247	1,124
Final Vol	**74**	**48**	**1,576**

Final Vol	*Init Vol*	*Init Turns*	*Init Pct*	
1,272	1,093	1,235	0.568	*Right*
822	970			*Thru*
80	112	126	0.058	*Left*

ture me **7**

Departure Volume **902**

Approach Volume **2,175**

Ap V **2**

Dennis Chavez

Dennis Chavez

ach me **98**

Approach Volume **1,098**

Left	0.297	326	289	**83**
Thru			780	**1,009**
Right	0.030	33	30	**5**
	Init Pct	*Init Turns*	*Init Vol*	*Final Vol*

6	**18**	**121**	*Final Vol*
22	49	74	*Init Vol*
24		84	*Init Turns*
0.168		0.577	*Init Pct*
Left	*Thru*	*Right*	

Departure Volume **2,707**

De V **2**

133

130
Departure Volume

145

145
Approach Volume

Loop Road

APPENDIX C
INTERSECTION CAPACITY ANALYSIS SUMMARIES

HCM 2010 Signalized Intersection Summary
1: Atrisco Vista & I-40 WB Off

Movement	EBL	EBT	EBR	WBL	WBT	WBR	NBL	NBT	NBR	SBL	SBT	SBR
Lane Configurations												
Traffic Volume (veh/h)	0	0	0	843	0	88	118	306	0	0	601	25
Future Volume (veh/h)	0	0	0	843	0	88	118	306	0	0	601	25
Number	7	4	14	3	8	18	5	2	12	1	6	16
Initial Q (Qb), veh	0	0	0	0	0	0	0	0	0	0	0	0
Ped-Bike Adj(A_pbT)	1.00		1.00	1.00		1.00	1.00		1.00	1.00		1.00
Parking Bus, Adj	1.00	1.00	1.00	1.00	1.00	1.00	1.00	1.00	1.00	1.00	1.00	1.00
Adj Sat Flow, veh/h/ln	0	1863	0	1863	1863	1900	1863	1863	0	0	1863	1900
Adj Flow Rate, veh/h	0	0	0	916	0	96	128	333	0	0	653	27
Adj No. of Lanes	0	1	0	2	1	0	1	2	0	0	2	0
Peak Hour Factor	0.92	0.92	0.92	0.92	0.92	0.92	0.92	0.92	0.92	0.92	0.92	0.92
Percent Heavy Veh, %	0	2	0	2	2	2	2	2	0	0	2	2
Cap, veh/h	0	776	0	1674	0	660	358	1593	0	0	1097	45
Arrive On Green	0.00	0.00	0.00	0.42	0.00	0.42	0.13	0.90	0.00	0.00	0.32	0.32
Sat Flow, veh/h	0	1863	0	3442	0	1583	1774	3632	0	0	3557	143
Grp Volume(v), veh/h	0	0	0	916	0	96	128	333	0	0	333	347
Grp Sat Flow(s),veh/h/ln	0	1863	0	1721	0	1583	1774	1770	0	0	1770	1837
Q Serve(g_s), s	0.0	0.0	0.0	12.7	0.0	2.3	2.7	0.7	0.0	0.0	9.5	9.5
Cycle Q Clear(g_c), s	0.0	0.0	0.0	12.7	0.0	2.3	2.7	0.7	0.0	0.0	9.5	9.5
Prop In Lane	0.00		0.00	1.00		1.00	1.00		0.00	0.00		0.08
Lane Grp Cap(c), veh/h	0	776	0	1674	0	660	358	1593	0	0	560	582
V/C Ratio(X)	0.00	0.00	0.00	0.55	0.00	0.15	0.36	0.21	0.00	0.00	0.59	0.60
Avail Cap(c_a), veh/h	0	776	0	1674	0	660	358	1593	0	0	560	582
HCM Platoon Ratio	1.00	1.00	1.00	1.00	1.00	1.00	2.00	2.00	1.00	1.00	1.00	1.00
Upstream Filter(I)	0.00	0.00	0.00	1.00	0.00	1.00	1.00	1.00	0.00	0.00	1.00	1.00
Uniform Delay (d), s/veh	0.0	0.0	0.0	13.9	0.0	10.9	11.4	1.7	0.0	0.0	17.3	17.3
Incr Delay (d2), s/veh	0.0	0.0	0.0	1.3	0.0	0.5	2.8	0.3	0.0	0.0	4.6	4.4
Initial Q Delay(d3),s/veh	0.0	0.0	0.0	0.0	0.0	0.0	0.0	0.0	0.0	0.0	0.0	0.0
%ile BackOfQ(95%),veh/ln	0.0	0.0	0.0	10.4	0.0	1.9	2.8	0.6	0.0	0.0	9.1	9.4
LnGrp Delay(d),s/veh	0.0	0.0	0.0	15.2	0.0	11.3	14.2	2.0	0.0	0.0	21.9	21.7
LnGrp LOS				B		B	B	A			C	C
Approach Vol, veh/h		0			1012			461			680	
Approach Delay, s/veh		0.0			14.8			5.4			21.8	
Approach LOS					B			A			C	

Timer	1	2	3	4	5	6	7	8
Assigned Phs		2		4	5	6		8
Phs Duration (G+Y+Rc), s		31.0		29.0	8.0	23.0		29.0
Change Period (Y+Rc), s		4.0		4.0	4.0	4.0		4.0
Max Green Setting (Gmax), s		27.0		25.0	4.0	19.0		25.0
Max Q Clear Time (g_c+I1), s		2.7		0.0	4.7	11.5		14.7
Green Ext Time (p_c), s		7.0		0.0	0.0	3.7		3.2

Intersection Summary	
HCM 2010 Ctrl Delay	15.0
HCM 2010 LOS	B

Movement	EBL	EBT	EBR	WBL	WBT	WBR	NBL	NBT	NBR	SBL	SBT	SBR
Lane Configurations												
Traffic Volume (veh/h)	0	0	0	838	0	212	138	729	0	0	470	23
Future Volume (veh/h)	0	0	0	838	0	212	138	729	0	0	470	23
Number	7	4	14	3	8	18	5	2	12	1	6	16
Initial Q (Qb), veh	0	0	0	0	0	0	0	0	0	0	0	0
Ped-Bike Adj(A_pbT)	1.00		1.00	1.00		1.00	1.00		1.00	1.00		1.00
Parking Bus, Adj	1.00	1.00	1.00	1.00	1.00	1.00	1.00	1.00	1.00	1.00	1.00	1.00
Adj Sat Flow, veh/h/ln	0	1863	0	1863	1863	1900	1863	1863	0	0	1863	1900
Adj Flow Rate, veh/h	0	0	0	911	0	230	150	792	0	0	511	25
Adj No. of Lanes	0	1	0	2	1	0	1	2	0	0	2	0
Peak Hour Factor	0.92	0.92	0.92	0.92	0.92	0.92	0.92	0.92	0.92	0.92	0.92	0.92
Percent Heavy Veh, %	0	2	0	2	2	2	2	2	0	0	2	2
Cap, veh/h	0	807	0	1731	0	686	392	1534	0	0	1030	50
Arrive On Green	0.00	0.00	0.00	0.43	0.00	0.43	0.13	0.87	0.00	0.00	0.30	0.30
Sat Flow, veh/h	0	1863	0	3442	0	1583	1774	3632	0	0	3528	168
Grp Volume(v), veh/h	0	0	0	911	0	230	150	792	0	0	263	273
Grp Sat Flow(s),veh/h/ln	0	1863	0	1721	0	1583	1774	1770	0	0	1770	1833
Q Serve(g_s), s	0.0	0.0	0.0	12.2	0.0	5.8	3.4	3.2	0.0	0.0	7.3	7.4
Cycle Q Clear(g_c), s	0.0	0.0	0.0	12.2	0.0	5.8	3.4	3.2	0.0	0.0	7.3	7.4
Prop In Lane	0.00		0.00	1.00		1.00	1.00		0.00	0.00		0.09
Lane Grp Cap(c), veh/h	0	807	0	1731	0	686	392	1534	0	0	531	550
V/C Ratio(X)	0.00	0.00	0.00	0.53	0.00	0.34	0.38	0.52	0.00	0.00	0.50	0.50
Avail Cap(c_a), veh/h	0	807	0	1731	0	686	392	1534	0	0	531	550
HCM Platoon Ratio	1.00	1.00	1.00	1.00	1.00	1.00	2.00	2.00	1.00	1.00	1.00	1.00
Upstream Filter(I)	0.00	0.00	0.00	1.00	0.00	1.00	1.00	1.00	0.00	0.00	1.00	1.00
Uniform Delay (d), s/veh	0.0	0.0	0.0	13.1	0.0	11.3	11.8	2.5	0.0	0.0	17.3	17.3
Incr Delay (d2), s/veh	0.0	0.0	0.0	1.1	0.0	1.3	2.8	1.2	0.0	0.0	3.3	3.2
Initial Q Delay(d3),s/veh	0.0	0.0	0.0	0.0	0.0	0.0	0.0	0.0	0.0	0.0	0.0	0.0
%ile BackOfQ(95%),veh/ln	0.0	0.0	0.0	10.0	0.0	4.9	3.4	2.9	0.0	0.0	7.3	7.6
LnGrp Delay(d),s/veh	0.0	0.0	0.0	14.2	0.0	12.6	14.6	3.7	0.0	0.0	20.5	20.5
LnGrp LOS				B		B	B	A			C	C
Approach Vol, veh/h		0			1141			942			536	
Approach Delay, s/veh		0.0			13.9			5.5			20.5	
Approach LOS					B			A			C	

Timer	1	2	3	4	5	6	7	8
Assigned Phs		2		4	5	6		8
Phs Duration (G+Y+Rc), s		30.0		30.0	8.0	22.0		30.0
Change Period (Y+Rc), s		4.0		4.0	4.0	4.0		4.0
Max Green Setting (Gmax), s		26.0		26.0	4.0	18.0		26.0
Max Q Clear Time (g_c+I1), s		5.2		0.0	5.4	9.4		14.2
Green Ext Time (p_c), s		9.2		0.0	0.0	5.3		4.1

Intersection Summary	
HCM 2010 Ctrl Delay	12.2
HCM 2010 LOS	B

Movement	EBL	EBT	EBR	WBL	WBT	WBR	NBL	NBT	NBR	SBL	SBT	SBR
Lane Configurations												
Traffic Volume (vph)	3	0	42	0	0	0	0	439	892	235	1229	0
Future Volume (vph)	3	0	42	0	0	0	0	439	892	235	1229	0
Ideal Flow (vphpl)	1900	1900	1900	1900	1900	1900	1900	1900	1900	1900	1900	1900
Total Lost time (s)		4.0	4.0					4.0	4.0	4.0	4.0	
Lane Util. Factor		1.00	1.00					0.91	0.91	1.00	0.95	
Frt		1.00	0.85					0.92	0.85	1.00	1.00	
Flt Protected		0.95	1.00					1.00	1.00	0.95	1.00	
Satd. Flow (prot)		1770	1583					3134	1441	1770	3539	
Flt Permitted		0.76	1.00					1.00	1.00	0.15	1.00	
Satd. Flow (perm)		1410	1583					3134	1441	287	3539	
Peak-hour factor, PHF	0.92	0.92	0.92	0.92	0.92	0.92	0.92	0.92	0.92	0.92	0.92	0.92
Adj. Flow (vph)	3	0	46	0	0	0	0	477	970	255	1336	0
RTOR Reduction (vph)	0	0	34	0	0	0	0	307	307	0	0	0
Lane Group Flow (vph)	0	3	12	0	0	0	0	655	178	255	1336	0
Turn Type	Perm	NA	Perm					NA	Perm	pm+pt	NA	
Protected Phases		4			8			2		1	6	
Permitted Phases	4		4						2	6		
Actuated Green, G (s)		16.0	16.0					22.0	22.0	36.0	36.0	
Effective Green, g (s)		16.0	16.0					22.0	22.0	36.0	36.0	
Actuated g/C Ratio		0.27	0.27					0.37	0.37	0.60	0.60	
Clearance Time (s)		4.0	4.0					4.0	4.0	4.0	4.0	
Lane Grp Cap (vph)		376	422					1149	528	419	2123	
v/s Ratio Prot								0.21		0.10	c0.38	
v/s Ratio Perm		0.00	c0.01						0.12	0.26		
v/c Ratio		0.01	0.03					0.57	0.34	0.61	0.63	
Uniform Delay, d1		16.2	16.3					15.2	13.7	8.8	7.7	
Progression Factor		1.00	1.00					1.00	1.00	1.14	1.25	
Incremental Delay, d2		0.0	0.1					2.1	1.7	4.5	1.0	
Delay (s)		16.2	16.4					17.3	15.5	14.5	10.6	
Level of Service		B	B					B	B	B	B	
Approach Delay (s)		16.4			0.0			16.7			11.2	
Approach LOS		B			A			B			B	

Intersection Summary			
HCM 2000 Control Delay	13.9	HCM 2000 Level of Service	B
HCM 2000 Volume to Capacity ratio	0.48		
Actuated Cycle Length (s)	60.0	Sum of lost time (s)	12.0
Intersection Capacity Utilization	63.2%	ICU Level of Service	B
Analysis Period (min)	15		
c Critical Lane Group			

Movement	EBL	EBT	EBR	WBL	WBT	WBR	NBL	NBT	NBR	SBL	SBT	SBR
Lane Configurations												
Traffic Volume (vph)	14	0	104	0	0	0	0	897	928	183	1150	0
Future Volume (vph)	14	0	104	0	0	0	0	897	928	183	1150	0
Ideal Flow (vphpl)	1900	1900	1900	1900	1900	1900	1900	1900	1900	1900	1900	1900
Total Lost time (s)		4.0	4.0					4.0	4.0	4.0	4.0	
Lane Util. Factor		1.00	1.00					0.91	0.91	1.00	0.95	
Frt		1.00	0.85					0.96	0.85	1.00	1.00	
Flt Protected		0.95	1.00					1.00	1.00	0.95	1.00	
Satd. Flow (prot)		1770	1583					3244	1441	1770	3539	
Flt Permitted		0.76	1.00					1.00	1.00	0.13	1.00	
Satd. Flow (perm)		1410	1583					3244	1441	240	3539	
Peak-hour factor, PHF	0.92	0.92	0.92	0.92	0.92	0.92	0.92	0.92	0.92	0.92	0.92	0.92
Adj. Flow (vph)	15	0	113	0	0	0	0	975	1009	199	1250	0
RTOR Reduction (vph)	0	0	67	0	0	0	0	66	338	0	0	0
Lane Group Flow (vph)	0	15	46	0	0	0	0	1303	277	199	1250	0
Turn Type	Perm	NA	Perm					NA	Perm	pm+pt	NA	
Protected Phases		4			8			2		1	6	
Permitted Phases	4		4						2	6		
Actuated Green, G (s)		16.0	16.0					27.0	27.0	36.0	36.0	
Effective Green, g (s)		16.0	16.0					27.0	27.0	36.0	36.0	
Actuated g/C Ratio		0.27	0.27					0.45	0.45	0.60	0.60	
Clearance Time (s)		4.0	4.0					4.0	4.0	4.0	4.0	
Lane Grp Cap (vph)		376	422					1459	648	271	2123	
v/s Ratio Prot								c0.40		0.06	c0.35	
v/s Ratio Perm		0.01	c0.03						0.19	0.38		
v/c Ratio		0.04	0.11					0.89	0.43	0.73	0.59	
Uniform Delay, d1		16.3	16.6					15.2	11.2	11.2	7.4	
Progression Factor		1.00	1.00					1.00	1.00	1.36	0.95	
Incremental Delay, d2		0.2	0.5					8.7	2.1	12.4	0.9	
Delay (s)		16.5	17.1					23.9	13.3	27.6	7.9	
Level of Service		B	B					C	B	C	A	
Approach Delay (s)		17.1			0.0			20.6			10.6	
Approach LOS		B			A			C			B	

Intersection Summary			
HCM 2000 Control Delay	16.4	HCM 2000 Level of Service	B
HCM 2000 Volume to Capacity ratio	0.62		
Actuated Cycle Length (s)	60.0	Sum of lost time (s)	12.0
Intersection Capacity Utilization	61.8%	ICU Level of Service	B
Analysis Period (min)	15		
c Critical Lane Group			

Movement	EBL	EBT	EBR	WBL	WBT	WBR	NBL	NBT	NBR	SBL	SBT	SBR
Lane Configurations												
Traffic Volume (veh/h)	0	0	0	715	0	133	127	331	0	0	600	44
Future Volume (veh/h)	0	0	0	715	0	133	127	331	0	0	600	44
Number				3	8	18	5	2	12	1	6	16
Initial Q (Qb), veh				0	0	0	0	0	0	0	0	0
Ped-Bike Adj(A_pbT)				1.00		1.00	1.00		1.00	1.00		1.00
Parking Bus, Adj				1.00	1.00	1.00	1.00	1.00	1.00	1.00	1.00	1.00
Adj Sat Flow, veh/h/ln				1863	1863	1900	1863	1863	0	0	1863	1900
Adj Flow Rate, veh/h				777	0	145	138	360	0	0	652	48
Adj No. of Lanes				1	1	0	1	1	0	0	2	0
Peak Hour Factor				0.92	0.92	0.92	0.92	0.92	0.92	0.92	0.92	0.92
Percent Heavy Veh, %				2	2	2	2	2	0	0	2	2
Cap, veh/h				828	0	739	304	745	0	0	891	66
Arrive On Green				0.47	0.00	0.47	0.07	0.40	0.00	0.00	0.27	0.27
Sat Flow, veh/h				1774	0	1583	1774	1863	0	0	3436	246
Grp Volume(v), veh/h				777	0	145	138	360	0	0	345	355
Grp Sat Flow(s),veh/h/ln				1774	0	1583	1774	1863	0	0	1770	1819
Q Serve(g_s), s				24.9	0.0	3.2	3.2	8.6	0.0	0.0	10.6	10.7
Cycle Q Clear(g_c), s				24.9	0.0	3.2	3.2	8.6	0.0	0.0	10.6	10.7
Prop In Lane				1.00		1.00	1.00		0.00	0.00		0.14
Lane Grp Cap(c), veh/h				828	0	739	304	745	0	0	472	485
V/C Ratio(X)				0.94	0.00	0.20	0.45	0.48	0.00	0.00	0.73	0.73
Avail Cap(c_a), veh/h				828	0	739	304	745	0	0	472	485
HCM Platoon Ratio				1.00	1.00	1.00	1.00	1.00	1.00	1.00	1.00	1.00
Upstream Filter(I)				1.00	0.00	1.00	1.00	1.00	0.00	0.00	1.00	1.00
Uniform Delay (d), s/veh				15.2	0.0	9.4	14.7	13.4	0.0	0.0	20.0	20.0
Incr Delay (d2), s/veh				19.5	0.0	0.6	4.8	2.2	0.0	0.0	9.6	9.4
Initial Q Delay(d3),s/veh				0.0	0.0	0.0	0.0	0.0	0.0	0.0	0.0	0.0
%ile BackOfQ(95%),veh/ln				23.2	0.0	2.8	3.5	8.5	0.0	0.0	10.6	10.8
LnGrp Delay(d),s/veh				34.7	0.0	10.0	19.5	15.6	0.0	0.0	29.6	29.5
LnGrp LOS				C		A	B	B			C	C
Approach Vol, veh/h					922			498			700	
Approach Delay, s/veh					30.8			16.7			29.5	
Approach LOS					C			B			C	

Timer	1	2	3	4	5	6	7	8
Assigned Phs		2			5	6		8
Phs Duration (G+Y+Rc), s		28.0			8.0	20.0		32.0
Change Period (Y+Rc), s		4.0			4.0	4.0		4.0
Max Green Setting (Gmax), s		24.0			4.0	16.0		28.0
Max Q Clear Time (g_c+I1), s		10.6			5.2	12.7		26.9
Green Ext Time (p_c), s		5.5			0.0	2.0		0.5

Intersection Summary	
HCM 2010 Ctrl Delay	27.1
HCM 2010 LOS	C

Movement	EBL	EBT	EBR	WBL	WBT	WBR	NBL	NBT	NBR	SBL	SBT	SBR
Lane Configurations												
Traffic Volume (veh/h)	0	0	0	448	0	329	77	469	0	0	683	83
Future Volume (veh/h)	0	0	0	448	0	329	77	469	0	0	683	83
Number				3	8	18	5	2	12	1	6	16
Initial Q (Qb), veh				0	0	0	0	0	0	0	0	0
Ped-Bike Adj(A_pbT)				1.00		1.00	1.00		1.00	1.00		1.00
Parking Bus, Adj				1.00	1.00	1.00	1.00	1.00	1.00	1.00	1.00	1.00
Adj Sat Flow, veh/h/ln				1863	1863	1900	1863	1863	0	0	1863	1900
Adj Flow Rate, veh/h				487	0	358	84	510	0	0	742	90
Adj No. of Lanes				1	1	0	1	1	0	0	2	0
Peak Hour Factor				0.92	0.92	0.92	0.92	0.92	0.92	0.92	0.92	0.92
Percent Heavy Veh, %				2	2	2	2	2	0	0	2	2
Cap, veh/h				710	0	633	324	869	0	0	1060	128
Arrive On Green				0.40	0.00	0.40	0.04	0.31	0.00	0.00	0.33	0.33
Sat Flow, veh/h				1774	0	1583	1774	1863	0	0	3272	385
Grp Volume(v), veh/h				487	0	358	84	510	0	0	413	419
Grp Sat Flow(s),veh/h/ln				1774	0	1583	1774	1863	0	0	1770	1795
Q Serve(g_s), s				13.6	0.0	10.5	1.7	13.8	0.0	0.0	12.2	12.2
Cycle Q Clear(g_c), s				13.6	0.0	10.5	1.7	13.8	0.0	0.0	12.2	12.2
Prop In Lane				1.00		1.00	1.00		0.00	0.00		0.21
Lane Grp Cap(c), veh/h				710	0	633	324	869	0	0	590	598
V/C Ratio(X)				0.69	0.00	0.57	0.26	0.59	0.00	0.00	0.70	0.70
Avail Cap(c_a), veh/h				710	0	633	324	869	0	0	590	598
HCM Platoon Ratio				1.00	1.00	1.00	0.67	0.67	1.00	1.00	1.00	1.00
Upstream Filter(I)				1.00	0.00	1.00	1.00	1.00	0.00	0.00	1.00	1.00
Uniform Delay (d), s/veh				14.9	0.0	14.0	12.3	15.7	0.0	0.0	17.4	17.4
Incr Delay (d2), s/veh				5.3	0.0	3.6	1.9	2.9	0.0	0.0	6.8	6.7
Initial Q Delay(d3),s/veh				0.0	0.0	0.0	0.0	0.0	0.0	0.0	0.0	0.0
%ile BackOfQ(95%),veh/ln				12.2	0.0	9.0	1.8	12.3	0.0	0.0	11.3	11.4
LnGrp Delay(d),s/veh				20.2	0.0	17.6	14.3	18.6	0.0	0.0	24.2	24.1
LnGrp LOS				C		B	B	B			C	C
Approach Vol, veh/h					845			594			832	
Approach Delay, s/veh					19.1			18.0			24.1	
Approach LOS					B			B			C	

Timer	1	2	3	4	5	6	7	8
Assigned Phs		2			5	6		8
Phs Duration (G+Y+Rc), s		32.0			8.0	24.0		28.0
Change Period (Y+Rc), s		4.0			4.0	4.0		4.0
Max Green Setting (Gmax), s		28.0			4.0	20.0		24.0
Max Q Clear Time (g_c+I1), s		15.8			3.7	14.2		15.6
Green Ext Time (p_c), s		6.7			0.0	3.8		2.7

Intersection Summary	
HCM 2010 Ctrl Delay	20.7
HCM 2010 LOS	C

Movement	EBL	EBT	EBR	WBL	WBT	WBR	NBL	NBT	NBR	SBL	SBT	SBR
Lane Configurations												
Traffic Volume (veh/h)	12	0	29	0	0	0	0	456	398	395	934	0
Future Volume (veh/h)	12	0	29	0	0	0	0	456	398	395	934	0
Number	7	4	14				5	2	12	1	6	16
Initial Q (Qb), veh	0	0	0				0	0	0	0	0	0
Ped-Bike Adj(A_pbT)	1.00		1.00				1.00		1.00	1.00		1.00
Parking Bus, Adj	1.00	1.00	1.00				1.00	1.00	1.00	1.00	1.00	1.00
Adj Sat Flow, veh/h/ln	1863	1863	1900				0	1863	1863	1863	1863	0
Adj Flow Rate, veh/h	13	0	32				0	496	433	429	1015	0
Adj No. of Lanes	1	1	0				0	1	1	1	2	0
Peak Hour Factor	0.92	0.92	0.92				0.92	0.92	0.92	0.92	0.92	0.92
Percent Heavy Veh, %	2	2	2				0	2	2	2	2	0
Cap, veh/h	473	0	422				0	621	528	530	2124	0
Arrive On Green	0.27	0.00	0.27				0.00	0.33	0.33	0.13	0.40	0.00
Sat Flow, veh/h	1774	0	1583				0	1863	1583	1774	3632	0
Grp Volume(v), veh/h	13	0	32				0	496	433	429	1015	0
Grp Sat Flow(s),veh/h/ln	1774	0	1583				0	1863	1583	1774	1770	0
Q Serve(g_s), s	0.3	0.0	0.9				0.0	14.5	15.1	8.1	12.7	0.0
Cycle Q Clear(g_c), s	0.3	0.0	0.9				0.0	14.5	15.1	8.1	12.7	0.0
Prop In Lane	1.00		1.00				0.00		1.00	1.00		0.00
Lane Grp Cap(c), veh/h	473	0	422				0	621	528	530	2124	0
V/C Ratio(X)	0.03	0.00	0.08				0.00	0.80	0.82	0.81	0.48	0.00
Avail Cap(c_a), veh/h	473	0	422				0	621	528	530	2124	0
HCM Platoon Ratio	1.00	1.00	1.00				1.00	1.00	1.00	0.67	0.67	1.00
Upstream Filter(I)	1.00	0.00	1.00				0.00	1.00	1.00	1.00	1.00	0.00
Uniform Delay (d), s/veh	16.3	0.0	16.5				0.0	18.2	18.4	12.0	11.0	0.0
Incr Delay (d2), s/veh	0.1	0.0	0.3				0.0	10.3	13.4	12.6	0.8	0.0
Initial Q Delay(d3),s/veh	0.0	0.0	0.0				0.0	0.0	0.0	0.0	0.0	0.0
%ile BackOfQ(95%),veh/ln	0.3	0.0	0.8				0.0	14.2	13.2	9.5	10.6	0.0
LnGrp Delay(d),s/veh	16.4	0.0	16.8				0.0	28.5	31.7	24.6	11.8	0.0
LnGrp LOS	B		B					C	C	C	B	
Approach Vol, veh/h		45						929			1444	
Approach Delay, s/veh		16.7						30.0			15.6	
Approach LOS		B						C			B	

Timer	1	2	3	4	5	6	7	8
Assigned Phs	1	2		4		6		
Phs Duration (G+Y+Rc), s	16.0	24.0		20.0		40.0		
Change Period (Y+Rc), s	4.0	4.0		4.0		4.0		
Max Green Setting (Gmax), s	12.0	20.0		16.0		36.0		
Max Q Clear Time (g_c+I1), s	10.1	17.1		2.9		14.7		
Green Ext Time (p_c), s	0.3	2.5		0.1		13.0		

Intersection Summary	
HCM 2010 Ctrl Delay	21.1
HCM 2010 LOS	C

Movement	EBL	EBT	EBR	WBL	WBT	WBR	NBL	NBT	NBR	SBL	SBT	SBR
Lane Configurations												
Traffic Volume (veh/h)	36	0	99	0	0	0	0	515	362	252	879	0
Future Volume (veh/h)	36	0	99	0	0	0	0	515	362	252	879	0
Number	7	4	14				5	2	12	1	6	16
Initial Q (Qb), veh	0	0	0				0	0	0	0	0	0
Ped-Bike Adj(A_pbT)	1.00		1.00				1.00		1.00	1.00		1.00
Parking Bus, Adj	1.00	1.00	1.00				1.00	1.00	1.00	1.00	1.00	1.00
Adj Sat Flow, veh/h/ln	1863	1863	1900				0	1863	1863	1863	1863	0
Adj Flow Rate, veh/h	39	0	108				0	560	393	274	955	0
Adj No. of Lanes	1	1	0				0	1	1	1	2	0
Peak Hour Factor	0.92	0.92	0.92				0.92	0.92	0.92	0.92	0.92	0.92
Percent Heavy Veh, %	2	2	2				0	2	2	2	2	0
Cap, veh/h	473	0	422				0	745	633	440	2124	0
Arrive On Green	0.27	0.00	0.27				0.00	0.40	0.40	0.04	0.20	0.00
Sat Flow, veh/h	1774	0	1583				0	1863	1583	1774	3632	0
Grp Volume(v), veh/h	39	0	108				0	560	393	274	955	0
Grp Sat Flow(s),veh/h/ln	1774	0	1583				0	1863	1583	1774	1770	0
Q Serve(g_s), s	1.0	0.0	3.2				0.0	15.5	11.9	4.7	14.3	0.0
Cycle Q Clear(g_c), s	1.0	0.0	3.2				0.0	15.5	11.9	4.7	14.3	0.0
Prop In Lane	1.00		1.00				0.00		1.00	1.00		0.00
Lane Grp Cap(c), veh/h	473	0	422				0	745	633	440	2124	0
V/C Ratio(X)	0.08	0.00	0.26				0.00	0.75	0.62	0.62	0.45	0.00
Avail Cap(c_a), veh/h	473	0	422				0	745	633	440	2124	0
HCM Platoon Ratio	1.00	1.00	1.00				1.00	1.00	1.00	0.33	0.33	1.00
Upstream Filter(I)	1.00	0.00	1.00				0.00	1.00	1.00	1.00	1.00	0.00
Uniform Delay (d), s/veh	16.5	0.0	17.3				0.0	15.4	14.4	12.2	15.3	0.0
Incr Delay (d2), s/veh	0.3	0.0	1.5				0.0	6.9	4.5	6.5	0.7	0.0
Initial Q Delay(d3),s/veh	0.0	0.0	0.0				0.0	0.0	0.0	0.0	0.0	0.0
%ile BackOfQ(95%),veh/ln	0.9	0.0	2.8				0.0	14.4	9.9	5.4	11.6	0.0
LnGrp Delay(d),s/veh	16.8	0.0	18.8				0.0	22.3	18.9	18.8	16.0	0.0
LnGrp LOS	B		B					C	B	B	B	
Approach Vol, veh/h		147						953			1229	
Approach Delay, s/veh		18.3						20.9			16.6	
Approach LOS		B						C			B	

Timer	1	2	3	4	5	6	7	8
Assigned Phs	1	2		4		6		
Phs Duration (G+Y+Rc), s	12.0	28.0		20.0		40.0		
Change Period (Y+Rc), s	4.0	4.0		4.0		4.0		
Max Green Setting (Gmax), s	8.0	24.0		16.0		36.0		
Max Q Clear Time (g_c+I1), s	6.7	17.5		5.2		16.3		
Green Ext Time (p_c), s	0.1	5.1		0.5		12.2		

Intersection Summary	
HCM 2010 Ctrl Delay	18.5
HCM 2010 LOS	B

Movement	EBL	EBT	EBR	WBL	WBT	WBR	NBL	NBT	NBR	SBL	SBT	SBR
Lane Configurations												
Traffic Volume (veh/h)	239	1099	101	32	1263	75	179	543	41	79	535	349
Future Volume (veh/h)	239	1099	101	32	1263	75	179	543	41	79	535	349
Number	7	4	14	3	8	18	5	2	12	1	6	16
Initial Q (Qb), veh	0	0	0	0	0	0	0	0	0	0	0	0
Ped-Bike Adj(A_pbT)	1.00		1.00	1.00		1.00	1.00		1.00	1.00		1.00
Parking Bus, Adj	1.00	1.00	1.00	1.00	1.00	1.00	1.00	1.00	1.00	1.00	1.00	1.00
Adj Sat Flow, veh/h/ln	1863	1863	1863	1863	1863	1863	1863	1863	1900	1863	1863	1863
Adj Flow Rate, veh/h	260	1195	110	35	1373	82	195	590	45	86	582	379
Adj No. of Lanes	2	2	1	1	2	1	1	2	0	1	2	1
Peak Hour Factor	0.92	0.92	0.92	0.92	0.92	0.92	0.92	0.92	0.92	0.92	0.92	0.92
Percent Heavy Veh, %	2	2	2	2	2	2	2	2	2	2	2	2
Cap, veh/h	303	1661	863	48	1445	726	268	840	64	252	802	498
Arrive On Green	0.09	0.47	0.47	0.03	0.41	0.41	0.08	0.25	0.25	0.05	0.23	0.23
Sat Flow, veh/h	3442	3539	1583	1774	3539	1583	1774	3334	254	1774	3539	1583
Grp Volume(v), veh/h	260	1195	110	35	1373	82	195	313	322	86	582	379
Grp Sat Flow(s),veh/h/ln	1721	1770	1583	1774	1770	1583	1774	1770	1818	1774	1770	1583
Q Serve(g_s), s	5.9	21.5	2.7	1.6	29.8	2.3	6.0	12.8	12.8	2.9	12.1	17.1
Cycle Q Clear(g_c), s	5.9	21.5	2.7	1.6	29.8	2.3	6.0	12.8	12.8	2.9	12.1	17.1
Prop In Lane	1.00		1.00	1.00		1.00	1.00		0.14	1.00		1.00
Lane Grp Cap(c), veh/h	303	1661	863	48	1445	726	268	446	458	252	802	498
V/C Ratio(X)	0.86	0.72	0.13	0.73	0.95	0.11	0.73	0.70	0.70	0.34	0.73	0.76
Avail Cap(c_a), veh/h	303	1661	863	89	1471	738	268	446	458	252	802	498
HCM Platoon Ratio	1.00	1.00	1.00	1.00	1.00	1.00	1.00	1.00	1.00	1.00	1.00	1.00
Upstream Filter(I)	1.00	1.00	1.00	1.00	1.00	1.00	1.00	1.00	1.00	1.00	1.00	1.00
Uniform Delay (d), s/veh	35.7	16.9	8.8	38.3	22.7	12.3	24.6	27.0	27.0	22.6	28.4	24.5
Incr Delay (d2), s/veh	20.8	1.5	0.1	18.8	13.4	0.1	9.5	8.9	8.8	0.8	5.7	10.4
Initial Q Delay(d3),s/veh	0.0	0.0	0.0	0.0	0.0	0.0	0.0	0.0	0.0	0.0	0.0	0.0
%ile BackOfQ(95%),veh/ln	6.7	16.2	2.1	1.8	24.0	1.9	3.7	11.8	12.1	2.6	10.7	13.7
LnGrp Delay(d),s/veh	56.6	18.4	8.9	57.1	36.1	12.3	34.1	35.9	35.8	23.4	34.1	35.0
LnGrp LOS	E	B	A	E	D	B	C	D	D	C	C	C
Approach Vol, veh/h		1565			1490			830			1047	
Approach Delay, s/veh		24.1			35.3			35.4			33.5	
Approach LOS		C			D			D			C	

Timer	1	2	3	4	5	6	7	8
Assigned Phs	1	2	3	4	5	6	7	8
Phs Duration (G+Y+Rc), s	8.0	24.0	6.2	41.3	10.0	22.0	11.0	36.4
Change Period (Y+Rc), s	4.0	4.0	4.0	4.0	4.0	4.0	4.0	4.0
Max Green Setting (Gmax), s	4.0	20.0	4.0	36.0	6.0	18.0	7.0	33.0
Max Q Clear Time (g_c+I1), s	4.9	14.8	3.6	23.5	8.0	19.1	7.9	31.8
Green Ext Time (p_c), s	0.0	3.7	0.0	11.3	0.0	0.0	0.0	0.6

Intersection Summary	
HCM 2010 Ctrl Delay	31.4
HCM 2010 LOS	C

Movement	EBL	EBT	EBR	WBL	WBT	WBR	NBL	NBT	NBR	SBL	SBT	SBR
Lane Configurations												
Traffic Volume (veh/h)	208	1582	131	77	1530	122	131	540	77	135	620	229
Future Volume (veh/h)	208	1582	131	77	1530	122	131	540	77	135	620	229
Number	7	4	14	3	8	18	5	2	12	1	6	16
Initial Q (Qb), veh	0	0	0	0	0	0	0	0	0	0	0	0
Ped-Bike Adj(A_pbT)	1.00		1.00	1.00		1.00	1.00		1.00	1.00		1.00
Parking Bus, Adj	1.00	1.00	1.00	1.00	1.00	1.00	1.00	1.00	1.00	1.00	1.00	1.00
Adj Sat Flow, veh/h/ln	1863	1863	1863	1863	1863	1863	1863	1863	1900	1863	1863	1863
Adj Flow Rate, veh/h	226	1720	142	84	1663	133	142	587	84	147	674	249
Adj No. of Lanes	2	2	1	1	2	1	1	2	0	1	2	1
Peak Hour Factor	0.92	0.92	0.92	0.92	0.92	0.92	0.92	0.92	0.92	0.92	0.92	0.92
Percent Heavy Veh, %	2	2	2	2	2	2	2	2	2	2	2	2
Cap, veh/h	268	1770	792	99	1691	756	183	657	94	199	786	475
Arrive On Green	0.08	0.50	0.50	0.06	0.48	0.48	0.04	0.21	0.21	0.06	0.22	0.22
Sat Flow, veh/h	3442	3539	1583	1774	3539	1583	1774	3110	444	1774	3539	1583
Grp Volume(v), veh/h	226	1720	142	84	1663	133	142	333	338	147	674	249
Grp Sat Flow(s),veh/h/ln	1721	1770	1583	1774	1770	1583	1774	1770	1784	1774	1770	1583
Q Serve(g_s), s	5.8	42.5	4.4	4.2	41.7	4.3	4.0	16.5	16.6	5.0	16.5	11.8
Cycle Q Clear(g_c), s	5.8	42.5	4.4	4.2	41.7	4.3	4.0	16.5	16.6	5.0	16.5	11.8
Prop In Lane	1.00		1.00	1.00		1.00	1.00		0.25	1.00		1.00
Lane Grp Cap(c), veh/h	268	1770	792	99	1691	756	183	374	377	199	786	475
V/C Ratio(X)	0.84	0.97	0.18	0.85	0.98	0.18	0.78	0.89	0.90	0.74	0.86	0.52
Avail Cap(c_a), veh/h	268	1770	792	99	1691	756	183	374	377	199	786	475
HCM Platoon Ratio	1.00	1.00	1.00	1.00	1.00	1.00	1.00	1.00	1.00	1.00	1.00	1.00
Upstream Filter(I)	1.00	1.00	1.00	1.00	1.00	1.00	1.00	1.00	1.00	1.00	1.00	1.00
Uniform Delay (d), s/veh	41.0	21.9	12.4	42.1	23.1	13.4	33.0	34.5	34.5	30.4	33.6	26.2
Incr Delay (d2), s/veh	21.2	15.3	0.1	47.3	18.0	0.1	18.9	26.0	26.4	13.5	11.6	4.1
Initial Q Delay(d3),s/veh	0.0	0.0	0.0	0.0	0.0	0.0	0.0	0.0	0.0	0.0	0.0	0.0
%ile BackOfQ(95%),veh/ln	6.4	32.4	3.5	6.1	32.4	3.4	4.6	16.1	16.3	3.5	14.3	9.6
LnGrp Delay(d),s/veh	62.1	37.1	12.5	89.4	41.2	13.5	52.0	60.5	60.9	43.9	45.2	30.3
LnGrp LOS	E	D	B	F	D	B	D	E	E	D	D	C
Approach Vol, veh/h		2088			1880			813			1070	
Approach Delay, s/veh		38.2			41.4			59.2			41.6	
Approach LOS		D			D			E			D	

Timer	1	2	3	4	5	6	7	8
Assigned Phs	1	2	3	4	5	6	7	8
Phs Duration (G+Y+Rc), s	9.0	23.0	9.0	49.0	8.0	24.0	11.0	47.0
Change Period (Y+Rc), s	4.0	4.0	4.0	4.0	4.0	4.0	4.0	4.0
Max Green Setting (Gmax), s	5.0	19.0	5.0	45.0	4.0	20.0	7.0	43.0
Max Q Clear Time (g_c+I1), s	7.0	18.6	6.2	44.5	6.0	18.5	7.8	43.7
Green Ext Time (p_c), s	0.0	0.4	0.0	0.5	0.0	1.2	0.0	0.0

Intersection Summary	
HCM 2010 Ctrl Delay	42.7
HCM 2010 LOS	D

Movement	EBL	EBT	EBR	WBL	WBT	WBR	NBL	NBT	NBR	SBL	SBT	SBR
Lane Configurations												
Traffic Volume (vph)	232	346	109	89	805	189	327	263	92	153	252	544
Future Volume (vph)	232	346	109	89	805	189	327	263	92	153	252	544
Ideal Flow (vphpl)	1900	1900	1900	1900	1900	1900	1900	1900	1900	1900	1900	1900
Total Lost time (s)	4.0	4.0	4.0	4.0	4.0		4.0	4.0		4.0	4.0	4.0
Lane Util. Factor	0.97	0.91	1.00	1.00	0.91		0.97	0.95		1.00	0.91	0.91
Frt	1.00	1.00	0.85	1.00	0.97		1.00	0.96		1.00	0.92	0.85
Flt Protected	0.95	1.00	1.00	0.95	1.00		0.95	1.00		0.95	1.00	1.00
Satd. Flow (prot)	3433	5085	1583	1770	4941		3433	3402		1770	3126	1441
Flt Permitted	0.95	1.00	1.00	0.95	1.00		0.95	1.00		0.95	1.00	1.00
Satd. Flow (perm)	3433	5085	1583	1770	4941		3433	3402		1770	3126	1441
Peak-hour factor, PHF	0.92	0.92	0.92	0.92	0.92	0.92	0.92	0.92	0.92	0.92	0.92	0.92
Adj. Flow (vph)	252	376	118	97	875	205	355	286	100	166	274	591
RTOR Reduction (vph)	0	0	69	0	51	0	0	46	0	0	183	45
Lane Group Flow (vph)	252	376	49	97	1029	0	355	340	0	166	387	250
Turn Type	Prot	NA	pm+ov	Prot	NA		Prot	NA		Prot	NA	pm+ov
Protected Phases	7	4	5	3	8		5	2		1	6	7
Permitted Phases			4									6
Actuated Green, G (s)	8.0	20.8	31.5	6.9	19.7		10.7	21.5		10.2	21.0	29.0
Effective Green, g (s)	8.0	20.8	31.5	6.9	19.7		10.7	21.5		10.2	21.0	29.0
Actuated g/C Ratio	0.11	0.28	0.42	0.09	0.26		0.14	0.29		0.14	0.28	0.38
Clearance Time (s)	4.0	4.0	4.0	4.0	4.0		4.0	4.0		4.0	4.0	4.0
Vehicle Extension (s)	3.0	3.0	3.0	3.0	3.0		3.0	3.0		3.0	3.0	3.0
Lane Grp Cap (vph)	364	1402	745	161	1290		487	970		239	870	630
v/s Ratio Prot	c0.07	0.07	0.01	0.05	c0.21		c0.10	0.10		0.09	c0.12	0.04
v/s Ratio Perm			0.02									0.13
v/c Ratio	0.69	0.27	0.07	0.60	0.80		0.73	0.35		0.69	0.45	0.40
Uniform Delay, d1	32.5	21.3	13.1	32.9	26.0		31.0	21.4		31.1	22.4	16.8
Progression Factor	1.00	1.00	1.00	1.00	1.00		1.00	1.00		1.00	1.00	1.00
Incremental Delay, d2	5.6	0.1	0.0	6.2	3.5		5.4	1.0		8.5	1.7	0.4
Delay (s)	38.1	21.5	13.2	39.2	29.5		36.4	22.4		39.6	24.1	17.3
Level of Service	D	C	B	D	C		D	C		D	C	B
Approach Delay (s)		25.8			30.3			29.1			24.6	
Approach LOS		C			C			C			C	

Intersection Summary			
HCM 2000 Control Delay	27.6	HCM 2000 Level of Service	C
HCM 2000 Volume to Capacity ratio	0.65		
Actuated Cycle Length (s)	75.4	Sum of lost time (s)	16.0
Intersection Capacity Utilization	61.8%	ICU Level of Service	B
Analysis Period (min)	15		

c Critical Lane Group

Movement	EBL	EBT	EBR	WBL	WBT	WBR	NBL	NBT	NBR	SBL	SBT	SBR
Lane Configurations												
Traffic Volume (vph)	567	1039	244	41	883	95	100	329	18	57	512	318
Future Volume (vph)	567	1039	244	41	883	95	100	329	18	57	512	318
Ideal Flow (vphpl)	1900	1900	1900	1900	1900	1900	1900	1900	1900	1900	1900	1900
Total Lost time (s)	4.0	4.0	4.0	4.0	4.0		4.0	4.0		4.0	4.0	4.0
Lane Util. Factor	0.97	0.91	1.00	1.00	0.91		0.97	0.95		1.00	0.91	0.91
Frt	1.00	1.00	0.85	1.00	0.99		1.00	0.99		1.00	0.98	0.85
Flt Protected	0.95	1.00	1.00	0.95	1.00		0.95	1.00		0.95	1.00	1.00
Satd. Flow (prot)	3433	5085	1583	1770	5011		3433	3511		1770	3331	1441
Flt Permitted	0.95	1.00	1.00	0.95	1.00		0.95	1.00		0.95	1.00	1.00
Satd. Flow (perm)	3433	5085	1583	1770	5011		3433	3511		1770	3331	1441
Peak-hour factor, PHF	0.92	0.92	0.92	0.92	0.92	0.92	0.92	0.92	0.92	0.92	0.92	0.92
Adj. Flow (vph)	616	1129	265	45	960	103	109	358	20	62	557	346
RTOR Reduction (vph)	0	0	102	0	17	0	0	5	0	0	13	37
Lane Group Flow (vph)	616	1129	163	45	1046	0	109	373	0	62	617	236
Turn Type	Prot	NA	pm+ov	Prot	NA		Prot	NA		Prot	NA	pm+ov
Protected Phases	7	4	5	3	8		5	2		1	6	7
Permitted Phases			4									6
Actuated Green, G (s)	15.6	30.6	34.6	3.6	18.6		4.0	22.8		4.0	22.8	38.4
Effective Green, g (s)	15.6	30.6	34.6	3.6	18.6		4.0	22.8		4.0	22.8	38.4
Actuated g/C Ratio	0.20	0.40	0.45	0.05	0.24		0.05	0.30		0.05	0.30	0.50
Clearance Time (s)	4.0	4.0	4.0	4.0	4.0		4.0	4.0		4.0	4.0	4.0
Vehicle Extension (s)	3.0	3.0	3.0	3.0	3.0		3.0	3.0		3.0	3.0	3.0
Lane Grp Cap (vph)	695	2020	793	82	1210		178	1039		91	986	793
v/s Ratio Prot	c0.18	0.22	0.01	0.03	c0.21		0.03	0.11		c0.04	c0.19	0.06
v/s Ratio Perm			0.09									0.10
v/c Ratio	0.89	0.56	0.21	0.55	0.86		0.61	0.36		0.68	0.63	0.30
Uniform Delay, d1	29.8	18.0	12.9	35.9	28.0		35.7	21.3		35.9	23.4	11.4
Progression Factor	1.00	1.00	1.00	1.00	1.00		1.00	1.00		1.00	1.00	1.00
Incremental Delay, d2	13.0	0.3	0.1	7.3	6.7		6.1	1.0		19.0	3.0	0.2
Delay (s)	42.8	18.3	13.0	43.2	34.6		41.9	22.3		54.8	26.4	11.6
Level of Service	D	B	B	D	C		D	C		D	C	B
Approach Delay (s)		25.1			35.0			26.7			24.0	
Approach LOS		C			C			C			C	

Intersection Summary			
HCM 2000 Control Delay	27.5	HCM 2000 Level of Service	C
HCM 2000 Volume to Capacity ratio	0.77		
Actuated Cycle Length (s)	77.0	Sum of lost time (s)	16.0
Intersection Capacity Utilization	69.6%	ICU Level of Service	C
Analysis Period (min)	15		

c Critical Lane Group

Movement	EBL	EBT	EBR	WBL	WBT	WBR	NBL	NBT	NBR	SBL	SBT	SBR
Lane Configurations												
Traffic Volume (veh/h)	231	766	436	159	1211	84	770	166	162	71	114	337
Future Volume (veh/h)	231	766	436	159	1211	84	770	166	162	71	114	337
Number	7	4	14	3	8	18	5	2	12	1	6	16
Initial Q (Qb), veh	0	0	0	0	0	0	0	0	0	0	0	0
Ped-Bike Adj(A_pbT)	1.00		1.00	1.00		1.00	1.00		1.00	1.00		1.00
Parking Bus, Adj	1.00	1.00	1.00	1.00	1.00	1.00	1.00	1.00	1.00	1.00	1.00	1.00
Adj Sat Flow, veh/h/ln	1863	1863	1863	1863	1863	1863	1863	1863	1863	1863	1863	1863
Adj Flow Rate, veh/h	251	833	474	173	1316	91	837	180	176	77	124	366
Adj No. of Lanes	1	3	1	1	3	1	2	1	1	1	1	1
Peak Hour Factor	0.92	0.92	0.92	0.92	0.92	0.92	0.92	0.92	0.92	0.92	0.92	0.92
Percent Heavy Veh, %	2	2	2	2	2	2	2	2	2	2	2	2
Cap, veh/h	300	1509	857	309	1357	511	842	704	743	99	352	492
Arrive On Green	0.12	0.30	0.30	0.09	0.27	0.27	0.24	0.38	0.38	0.06	0.19	0.19
Sat Flow, veh/h	1774	5085	1583	1774	5085	1583	3442	1863	1583	1774	1863	1583
Grp Volume(v), veh/h	251	833	474	173	1316	91	837	180	176	77	124	366
Grp Sat Flow(s),veh/h/ln	1774	1695	1583	1774	1695	1583	1721	1863	1583	1774	1863	1583
Q Serve(g_s), s	8.9	12.4	17.6	6.2	23.0	3.7	21.8	6.0	6.0	3.9	5.2	17.0
Cycle Q Clear(g_c), s	8.9	12.4	17.6	6.2	23.0	3.7	21.8	6.0	6.0	3.9	5.2	17.0
Prop In Lane	1.00		1.00	1.00		1.00	1.00		1.00	1.00		1.00
Lane Grp Cap(c), veh/h	300	1509	857	309	1357	511	842	704	743	99	352	492
V/C Ratio(X)	0.84	0.55	0.55	0.56	0.97	0.18	0.99	0.26	0.24	0.78	0.35	0.74
Avail Cap(c_a), veh/h	301	1509	857	364	1357	511	842	704	743	178	352	492
HCM Platoon Ratio	1.00	1.00	1.00	1.00	1.00	1.00	1.00	1.00	1.00	1.00	1.00	1.00
Upstream Filter(I)	1.00	1.00	1.00	1.00	1.00	1.00	1.00	1.00	1.00	1.00	1.00	1.00
Uniform Delay (d), s/veh	22.5	26.6	13.5	21.4	32.6	21.9	33.9	19.3	14.2	41.9	31.7	27.8
Incr Delay (d2), s/veh	18.2	0.4	0.8	1.6	17.6	0.2	29.5	0.9	0.8	12.1	0.6	6.1
Initial Q Delay(d3),s/veh	0.0	0.0	0.0	0.0	0.0	0.0	0.0	0.0	0.0	0.0	0.0	0.0
%ile BackOfQ(95%),veh/ln	9.8	9.8	12.4	5.6	18.8	2.9	19.9	5.8	4.9	4.0	4.9	13.9
LnGrp Delay(d),s/veh	40.7	27.0	14.3	23.0	50.2	22.0	63.4	20.2	15.0	54.0	32.3	33.9
LnGrp LOS	D	C	B	C	D	C	E	C	B	D	C	C
Approach Vol, veh/h		1558			1580			1193			567	
Approach Delay, s/veh		25.4			45.6			49.7			36.3	
Approach LOS		C			D			D			D	

Timer	1	2	3	4	5	6	7	8
Assigned Phs	1	2	3	4	5	6	7	8
Phs Duration (G+Y+Rc), s	9.0	38.0	12.2	30.7	26.0	21.0	14.9	28.0
Change Period (Y+Rc), s	4.0	4.0	4.0	4.0	4.0	4.0	4.0	4.0
Max Green Setting (Gmax), s	9.0	30.0	11.0	24.0	22.0	17.0	11.0	24.0
Max Q Clear Time (g_c+I1), s	5.9	8.0	8.2	19.6	23.8	19.0	10.9	25.0
Green Ext Time (p_c), s	0.0	3.8	0.1	4.1	0.0	0.0	0.0	0.0

Intersection Summary	
HCM 2010 Ctrl Delay	39.1
HCM 2010 LOS	D

Notes

Movement	EBL	EBT	EBR	WBL	WBT	WBR	NBL	NBT	NBR	SBL	SBT	SBR
Lane Configurations												
Traffic Volume (veh/h)	261	1478	742	205	1324	72	620	160	184	104	167	350
Future Volume (veh/h)	261	1478	742	205	1324	72	620	160	184	104	167	350
Number	7	4	14	3	8	18	5	2	12	1	6	16
Initial Q (Qb), veh	0	0	0	0	0	0	0	0	0	0	0	0
Ped-Bike Adj(A_pbT)	1.00		1.00	1.00		1.00	1.00		1.00	1.00		1.00
Parking Bus, Adj	1.00	1.00	1.00	1.00	1.00	1.00	1.00	1.00	1.00	1.00	1.00	1.00
Adj Sat Flow, veh/h/ln	1863	1863	1863	1863	1863	1863	1863	1863	1863	1863	1863	1863
Adj Flow Rate, veh/h	284	1607	807	223	1439	78	674	174	200	113	182	380
Adj No. of Lanes	1	3	1	1	3	1	2	1	1	1	1	1
Peak Hour Factor	0.92	0.92	0.92	0.92	0.92	0.92	0.92	0.92	0.92	0.92	0.92	0.92
Percent Heavy Veh, %	2	2	2	2	2	2	2	2	2	2	2	2
Cap, veh/h	300	1752	880	204	1469	585	727	615	523	143	373	510
Arrive On Green	0.12	0.34	0.34	0.07	0.29	0.29	0.21	0.33	0.33	0.08	0.20	0.20
Sat Flow, veh/h	1774	5085	1583	1774	5085	1583	3442	1863	1583	1774	1863	1583
Grp Volume(v), veh/h	284	1607	807	223	1439	78	674	174	200	113	182	380
Grp Sat Flow(s),veh/h/ln	1774	1695	1583	1774	1695	1583	1721	1863	1583	1774	1863	1583
Q Serve(g_s), s	10.1	27.3	31.0	6.0	25.3	2.9	17.3	6.2	8.7	5.6	7.8	18.0
Cycle Q Clear(g_c), s	10.1	27.3	31.0	6.0	25.3	2.9	17.3	6.2	8.7	5.6	7.8	18.0
Prop In Lane	1.00		1.00	1.00		1.00	1.00		1.00	1.00		1.00
Lane Grp Cap(c), veh/h	300	1752	880	204	1469	585	727	615	523	143	373	510
V/C Ratio(X)	0.95	0.92	0.92	1.09	0.98	0.13	0.93	0.28	0.38	0.79	0.49	0.74
Avail Cap(c_a), veh/h	300	1752	880	204	1469	585	727	615	523	237	373	510
HCM Platoon Ratio	1.00	1.00	1.00	1.00	1.00	1.00	1.00	1.00	1.00	1.00	1.00	1.00
Upstream Filter(I)	1.00	1.00	1.00	1.00	1.00	1.00	1.00	1.00	1.00	1.00	1.00	1.00
Uniform Delay (d), s/veh	22.7	28.3	18.1	28.1	31.7	18.8	34.8	22.3	23.1	40.6	31.9	27.2
Incr Delay (d2), s/veh	38.1	8.2	14.3	89.7	18.7	0.1	18.1	1.1	2.1	9.3	1.0	5.9
Initial Q Delay(d3),s/veh	0.0	0.0	0.0	0.0	0.0	0.0	0.0	0.0	0.0	0.0	0.0	0.0
%ile BackOfQ(95%),veh/ln	15.3	20.1	29.0	9.2	20.5	2.3	15.3	6.1	7.4	5.6	7.4	14.1
LnGrp Delay(d),s/veh	60.9	36.4	32.4	117.9	50.5	18.9	52.9	23.4	25.2	49.9	32.9	33.1
LnGrp LOS	E	D	C	F	D	B	D	C	C	D	C	C
Approach Vol, veh/h		2698			1740			1048			675	
Approach Delay, s/veh		37.8			57.7			42.7			35.8	
Approach LOS		D			E			D			D	

Timer	1	2	3	4	5	6	7	8
Assigned Phs	1	2	3	4	5	6	7	8
Phs Duration (G+Y+Rc), s	11.3	33.7	10.0	35.0	23.0	22.0	15.0	30.0
Change Period (Y+Rc), s	4.0	4.0	4.0	4.0	4.0	4.0	4.0	4.0
Max Green Setting (Gmax), s	12.0	25.0	6.0	31.0	19.0	18.0	11.0	26.0
Max Q Clear Time (g_c+I1), s	7.6	10.7	8.0	33.0	19.3	20.0	12.1	27.3
Green Ext Time (p_c), s	0.1	3.7	0.0	0.0	0.0	0.0	0.0	0.0

Intersection Summary	
HCM 2010 Ctrl Delay	44.0
HCM 2010 LOS	D

Notes

Movement	EBL	EBT	EBR	WBL	WBT	WBR	NBL	NBT	NBR	SBL	SBT	SBR
Lane Configurations												
Traffic Volume (veh/h)	0	0	0	158	0	250	0	783	233	191	425	0
Future Volume (veh/h)	0	0	0	158	0	250	0	783	233	191	425	0
Number	7	4	14	3	8	18	5	2	12	1	6	16
Initial Q (Qb), veh	0	0	0	0	0	0	0	0	0	0	0	0
Ped-Bike Adj(A_pbT)	1.00		1.00	1.00		1.00	1.00		1.00	1.00		1.00
Parking Bus, Adj	1.00	1.00	1.00	1.00	1.00	1.00	1.00	1.00	1.00	1.00	1.00	1.00
Adj Sat Flow, veh/h/ln	0	1863	0	1863	1863	1900	0	1863	1863	1863	1863	0
Adj Flow Rate, veh/h	0	0	0	172	0	272	0	851	253	208	462	0
Adj No. of Lanes	0	1	0	1	1	0	0	1	1	1	1	0
Peak Hour Factor	0.92	0.92	0.92	0.92	0.92	0.92	0.92	0.92	0.92	0.92	0.92	0.92
Percent Heavy Veh, %	0	2	0	2	2	2	0	2	2	2	2	0
Cap, veh/h	0	380	0	468	0	323	0	1016	864	320	1263	0
Arrive On Green	0.00	0.00	0.00	0.20	0.00	0.20	0.00	0.55	0.55	0.07	0.68	0.00
Sat Flow, veh/h	0	1863	0	1774	0	1583	0	1863	1583	1774	1863	0
Grp Volume(v), veh/h	0	0	0	172	0	272	0	851	253	208	462	0
Grp Sat Flow(s),veh/h/ln	0	1863	0	1774	0	1583	0	1863	1583	1774	1863	0
Q Serve(g_s), s	0.0	0.0	0.0	5.8	0.0	11.2	0.0	25.9	5.9	3.2	7.2	0.0
Cycle Q Clear(g_c), s	0.0	0.0	0.0	5.8	0.0	11.2	0.0	25.9	5.9	3.2	7.2	0.0
Prop In Lane	0.00		0.00	1.00		1.00	0.00		1.00	1.00		0.00
Lane Grp Cap(c), veh/h	0	380	0	468	0	323	0	1016	864	320	1263	0
V/C Ratio(X)	0.00	0.00	0.00	0.37	0.00	0.84	0.00	0.84	0.29	0.65	0.37	0.00
Avail Cap(c_a), veh/h	0	439	0	525	0	373	0	1016	864	320	1263	0
HCM Platoon Ratio	1.00	1.00	1.00	1.00	1.00	1.00	1.00	1.00	1.00	1.00	1.00	1.00
Upstream Filter(I)	0.00	0.00	0.00	1.00	0.00	1.00	0.00	1.00	1.00	1.00	1.00	0.00
Uniform Delay (d), s/veh	0.0	0.0	0.0	23.8	0.0	26.0	0.0	12.9	8.3	13.7	4.7	0.0
Incr Delay (d2), s/veh	0.0	0.0	0.0	0.5	0.0	14.2	0.0	8.2	0.9	4.6	0.8	0.0
Initial Q Delay(d3),s/veh	0.0	0.0	0.0	0.0	0.0	0.0	0.0	0.0	0.0	0.0	0.0	0.0
%ile BackOfQ(95%),veh/ln	0.0	0.0	0.0	5.2	0.0	10.3	0.0	22.0	4.9	4.8	7.0	0.0
LnGrp Delay(d),s/veh	0.0	0.0	0.0	24.3	0.0	40.2	0.0	21.1	9.2	18.3	5.5	0.0
LnGrp LOS				C		D		C	A	B	A	
Approach Vol, veh/h		0			444			1104			670	
Approach Delay, s/veh		0.0			34.0			18.4			9.5	
Approach LOS					C			B			A	

Timer	1	2	3	4	5	6	7	8
Assigned Phs	1	2		4		6		8
Phs Duration (G+Y+Rc), s	9.0	41.0		17.8		50.0		17.8
Change Period (Y+Rc), s	4.0	4.0		4.0		4.0		4.0
Max Green Setting (Gmax), s	5.0	37.0		16.0		46.0		16.0
Max Q Clear Time (g_c+I1), s	5.2	27.9		0.0		9.2		13.2
Green Ext Time (p_c), s	0.0	6.1		0.0		14.1		0.6

Intersection Summary	
HCM 2010 Ctrl Delay	18.8
HCM 2010 LOS	B

Movement	EBL	EBT	EBR	WBL	WBT	WBR	NBL	NBT	NBR	SBL	SBT	SBR
Lane Configurations												
Traffic Volume (veh/h)	0	0	0	220	0	158	0	666	299	261	792	0
Future Volume (veh/h)	0	0	0	220	0	158	0	666	299	261	792	0
Number	7	4	14	3	8	18	5	2	12	1	6	16
Initial Q (Qb), veh	0	0	0	0	0	0	0	0	0	0	0	0
Ped-Bike Adj(A_pbT)	1.00		1.00	1.00		1.00	1.00		1.00	1.00		1.00
Parking Bus, Adj	1.00	1.00	1.00	1.00	1.00	1.00	1.00	1.00	1.00	1.00	1.00	1.00
Adj Sat Flow, veh/h/ln	0	1863	0	1863	1863	1900	0	1863	1863	1863	1863	0
Adj Flow Rate, veh/h	0	0	0	239	0	172	0	724	325	284	861	0
Adj No. of Lanes	0	1	0	1	1	0	0	1	1	1	1	0
Peak Hour Factor	0.92	0.92	0.92	0.92	0.92	0.92	0.92	0.92	0.92	0.92	0.92	0.92
Percent Heavy Veh, %	0	2	0	2	2	2	0	2	2	2	2	0
Cap, veh/h	0	331	0	436	0	281	0	970	825	414	1282	0
Arrive On Green	0.00	0.00	0.00	0.18	0.00	0.18	0.00	0.52	0.52	0.10	0.69	0.00
Sat Flow, veh/h	0	1863	0	1774	0	1583	0	1863	1583	1774	1863	0
Grp Volume(v), veh/h	0	0	0	239	0	172	0	724	325	284	861	0
Grp Sat Flow(s),veh/h/ln	0	1863	0	1774	0	1583	0	1863	1583	1774	1863	0
Q Serve(g_s), s	0.0	0.0	0.0	7.6	0.0	6.0	0.0	18.2	7.4	3.9	16.0	0.0
Cycle Q Clear(g_c), s	0.0	0.0	0.0	7.6	0.0	6.0	0.0	18.2	7.4	3.9	16.0	0.0
Prop In Lane	0.00		0.00	1.00		1.00	0.00		1.00	1.00		0.00
Lane Grp Cap(c), veh/h	0	331	0	436	0	281	0	970	825	414	1282	0
V/C Ratio(X)	0.00	0.00	0.00	0.55	0.00	0.61	0.00	0.75	0.39	0.69	0.67	0.00
Avail Cap(c_a), veh/h	0	500	0	597	0	425	0	970	825	445	1282	0
HCM Platoon Ratio	1.00	1.00	1.00	1.00	1.00	1.00	1.00	1.00	1.00	1.00	1.00	1.00
Upstream Filter(I)	0.00	0.00	0.00	1.00	0.00	1.00	0.00	1.00	1.00	1.00	1.00	0.00
Uniform Delay (d), s/veh	0.0	0.0	0.0	23.3	0.0	22.6	0.0	11.2	8.6	10.8	5.4	0.0
Incr Delay (d2), s/veh	0.0	0.0	0.0	1.1	0.0	2.2	0.0	5.2	1.4	4.0	2.8	0.0
Initial Q Delay(d3),s/veh	0.0	0.0	0.0	0.0	0.0	0.0	0.0	0.0	0.0	0.0	0.0	0.0
%ile BackOfQ(95%),veh/ln	0.0	0.0	0.0	6.9	0.0	4.9	0.0	16.0	6.3	5.5	13.8	0.0
LnGrp Delay(d),s/veh	0.0	0.0	0.0	24.4	0.0	24.8	0.0	16.4	10.0	14.7	8.2	0.0
LnGrp LOS				C		C		B	B	B	A	
Approach Vol, veh/h		0			411			1049			1145	
Approach Delay, s/veh		0.0			24.5			14.4			9.8	
Approach LOS					C			B			A	

Timer	1	2	3	4	5	6	7	8
Assigned Phs	1	2		4		6		8
Phs Duration (G+Y+Rc), s	10.0	35.0		14.6		45.0		14.6
Change Period (Y+Rc), s	4.0	4.0		4.0		4.0		4.0
Max Green Setting (Gmax), s	7.0	30.0		16.0		41.0		16.0
Max Q Clear Time (g_c+I1), s	5.9	20.2		0.0		18.0		9.6
Green Ext Time (p_c), s	0.1	7.5		0.0		14.3		1.0

Intersection Summary	
HCM 2010 Ctrl Delay	14.0
HCM 2010 LOS	B

Movement	EBL	EBT	EBR	WBL	WBT	WBR	NBL	NBT	NBR	SBL	SBT	SBR
Lane Configurations												
Traffic Volume (veh/h)	511	1273	89	31	642	179	170	534	133	315	383	401
Future Volume (veh/h)	511	1273	89	31	642	179	170	534	133	315	383	401
Number	7	4	14	3	8	18	5	2	12	1	6	16
Initial Q (Qb), veh	0	0	0	0	0	0	0	0	0	0	0	0
Ped-Bike Adj(A_pbT)	1.00		1.00	1.00		1.00	1.00		1.00	1.00		1.00
Parking Bus, Adj	1.00	1.00	1.00	1.00	1.00	1.00	1.00	1.00	1.00	1.00	1.00	1.00
Adj Sat Flow, veh/h/ln	1863	1863	1900	1863	1863	1863	1863	1863	1900	1863	1863	1863
Adj Flow Rate, veh/h	555	1384	97	34	698	195	185	580	145	342	416	436
Adj No. of Lanes	2	2	0	2	2	1	2	2	0	2	2	1
Peak Hour Factor	0.92	0.92	0.92	0.92	0.92	0.92	0.92	0.92	0.92	0.92	0.92	0.92
Percent Heavy Veh, %	2	2	2	2	2	2	2	2	2	2	2	2
Cap, veh/h	611	1437	100	101	991	623	248	745	186	391	1086	767
Arrive On Green	0.35	0.86	0.86	0.03	0.28	0.28	0.07	0.27	0.27	0.11	0.31	0.31
Sat Flow, veh/h	3442	3356	234	3442	3539	1583	3442	2809	700	3442	3539	1583
Grp Volume(v), veh/h	555	728	753	34	698	195	185	365	360	342	416	436
Grp Sat Flow(s),veh/h/ln	1721	1770	1821	1721	1770	1583	1721	1770	1739	1721	1770	1583
Q Serve(g_s), s	16.9	36.6	37.9	1.1	19.5	9.4	5.8	21.0	21.1	10.8	10.2	21.6
Cycle Q Clear(g_c), s	16.9	36.6	37.9	1.1	19.5	9.4	5.8	21.0	21.1	10.8	10.2	21.6
Prop In Lane	1.00		0.13	1.00		1.00	1.00		0.40	1.00		1.00
Lane Grp Cap(c), veh/h	611	758	780	101	991	623	248	469	461	391	1086	767
V/C Ratio(X)	0.91	0.96	0.97	0.34	0.70	0.31	0.75	0.78	0.78	0.87	0.38	0.57
Avail Cap(c_a), veh/h	679	780	803	156	1023	638	344	469	461	391	1086	767
HCM Platoon Ratio	2.00	2.00	2.00	1.00	1.00	1.00	1.00	1.00	1.00	1.00	1.00	1.00
Upstream Filter(I)	0.49	0.49	0.49	1.00	1.00	1.00	1.00	1.00	1.00	1.00	1.00	1.00
Uniform Delay (d), s/veh	34.6	7.2	7.2	52.3	35.5	23.1	50.0	37.4	37.4	48.0	30.0	20.2
Incr Delay (d2), s/veh	8.5	14.1	14.9	1.9	2.1	0.3	5.6	12.0	12.3	19.2	1.0	3.0
Initial Q Delay(d3),s/veh	0.0	0.0	0.0	0.0	0.0	0.0	0.0	0.0	0.0	0.0	0.0	0.0
%ile BackOfQ(95%),veh/ln	12.0	24.1	25.5	1.0	14.9	7.5	5.3	17.4	17.3	10.2	8.8	15.3
LnGrp Delay(d),s/veh	43.2	21.3	22.1	54.3	37.7	23.3	55.6	49.4	49.8	67.2	31.0	23.2
LnGrp LOS	D	C	C	D	D	C	E	D	D	E	C	C
Approach Vol, veh/h		2036			927			910			1194	
Approach Delay, s/veh		27.6			35.3			50.8			38.5	
Approach LOS		C			D			D			D	

Timer	1	2	3	4	5	6	7	8
Assigned Phs	1	2	3	4	5	6	7	8
Phs Duration (G+Y+Rc), s	17.0	33.7	7.7	51.6	12.4	38.2	24.0	35.3
Change Period (Y+Rc), s	4.5	4.5	4.5	4.5	4.5	4.5	4.5	4.5
Max Green Setting (Gmax), s	12.5	26.0	5.0	48.5	11.0	27.5	21.7	31.8
Max Q Clear Time (g_c+I1), s	12.8	23.1	3.1	39.9	7.8	23.6	18.9	21.5
Green Ext Time (p_c), s	0.0	2.1	0.0	7.2	0.2	2.7	0.6	8.5

Intersection Summary	
HCM 2010 Ctrl Delay	35.7
HCM 2010 LOS	D

Movement	EBL	EBT	EBR	WBL	WBT	WBR	NBL	NBT	NBR	SBL	SBT	SBR
Lane Configurations												
Traffic Volume (veh/h)	545	1104	184	130	1333	384	147	463	76	231	606	448
Future Volume (veh/h)	545	1104	184	130	1333	384	147	463	76	231	606	448
Number	7	4	14	3	8	18	5	2	12	1	6	16
Initial Q (Qb), veh	0	0	0	0	0	0	0	0	0	0	0	0
Ped-Bike Adj(A_pbT)	1.00		1.00	1.00		1.00	1.00		1.00	1.00		1.00
Parking Bus, Adj	1.00	1.00	1.00	1.00	1.00	1.00	1.00	1.00	1.00	1.00	1.00	1.00
Adj Sat Flow, veh/h/ln	1863	1863	1900	1863	1863	1863	1863	1863	1900	1863	1863	1863
Adj Flow Rate, veh/h	592	1200	200	141	1449	417	160	503	83	251	659	487
Adj No. of Lanes	2	2	0	2	2	1	2	2	0	2	2	1
Peak Hour Factor	0.92	0.92	0.92	0.92	0.92	0.92	0.92	0.92	0.92	0.92	0.92	0.92
Percent Heavy Veh, %	2	2	2	2	2	2	2	2	2	2	2	2
Cap, veh/h	591	1554	258	199	1406	757	188	567	93	278	753	609
Arrive On Green	0.34	1.00	1.00	0.06	0.40	0.40	0.05	0.19	0.19	0.08	0.21	0.21
Sat Flow, veh/h	3442	3040	504	3442	3539	1583	3442	3044	500	3442	3539	1583
Grp Volume(v), veh/h	592	696	704	141	1449	417	160	291	295	251	659	487
Grp Sat Flow(s),veh/h/ln	1721	1770	1774	1721	1770	1583	1721	1770	1774	1721	1770	1583
Q Serve(g_s), s	18.9	0.0	0.0	4.4	43.7	20.5	5.1	17.7	17.8	8.0	19.8	23.4
Cycle Q Clear(g_c), s	18.9	0.0	0.0	4.4	43.7	20.5	5.1	17.7	17.8	8.0	19.8	23.4
Prop In Lane	1.00		0.28	1.00		1.00	1.00		0.28	1.00		1.00
Lane Grp Cap(c), veh/h	591	905	907	199	1406	757	188	330	331	278	753	609
V/C Ratio(X)	1.00	0.77	0.78	0.71	1.03	0.55	0.85	0.88	0.89	0.90	0.88	0.80
Avail Cap(c_a), veh/h	591	905	907	216	1406	757	188	330	331	278	753	609
HCM Platoon Ratio	2.00	2.00	2.00	1.00	1.00	1.00	1.00	1.00	1.00	1.00	1.00	1.00
Upstream Filter(I)	0.43	0.43	0.43	1.00	1.00	1.00	1.00	1.00	1.00	1.00	1.00	1.00
Uniform Delay (d), s/veh	36.1	0.0	0.0	50.9	33.1	20.3	51.6	43.6	43.7	50.1	41.9	30.1
Incr Delay (d2), s/veh	24.6	1.8	1.9	9.4	32.2	0.9	29.5	27.3	28.2	29.9	13.5	10.6
Initial Q Delay(d3),s/veh	0.0	0.0	0.0	0.0	0.0	0.0	0.0	0.0	0.0	0.0	0.0	0.0
%ile BackOfQ(95%),veh/ln	19.6	0.8	0.9	4.3	49.6	14.1	5.7	16.5	16.9	8.6	16.6	21.2
LnGrp Delay(d),s/veh	60.7	1.8	1.9	60.3	65.3	21.2	81.0	70.9	71.8	80.0	55.4	40.7
LnGrp LOS	F	A	A	E	F	C	F	E	E	E	E	D
Approach Vol, veh/h		1992			2007			746			1397	
Approach Delay, s/veh		19.3			55.8			73.4			54.7	
Approach LOS		B			E			E			D	

Timer	1	2	3	4	5	6	7	8
Assigned Phs	1	2	3	4	5	6	7	8
Phs Duration (G+Y+Rc), s	13.4	25.0	10.9	60.7	10.5	27.9	23.4	48.2
Change Period (Y+Rc), s	4.5	4.5	4.5	4.5	4.5	4.5	4.5	4.5
Max Green Setting (Gmax), s	8.9	20.5	6.9	55.7	6.0	23.4	18.9	43.7
Max Q Clear Time (g_c+I1), s	10.0	19.8	6.4	2.0	7.1	25.4	20.9	45.7
Green Ext Time (p_c), s	0.0	0.6	0.0	40.3	0.0	0.0	0.0	0.0

Intersection Summary	
HCM 2010 Ctrl Delay	45.9
HCM 2010 LOS	D

Movement	EBL	EBT	EBR	WBL	WBT	WBR	NBL	NBT	NBR	SBL	SBT	SBR
Lane Configurations												
Traffic Volume (veh/h)	29	1007	76	170	901	66	198	159	517	144	92	55
Future Volume (veh/h)	29	1007	76	170	901	66	198	159	517	144	92	55
Number	7	4	14	3	8	18	5	2	12	1	6	16
Initial Q (Qb), veh	0	0	0	0	0	0	0	0	0	0	0	0
Ped-Bike Adj(A_pbT)	1.00		1.00	1.00		1.00	1.00		1.00	1.00		1.00
Parking Bus, Adj	1.00	1.00	1.00	1.00	1.00	1.00	1.00	1.00	1.00	1.00	1.00	1.00
Adj Sat Flow, veh/h/ln	1863	1863	1863	1863	1863	1863	1863	1863	1863	1863	1863	1900
Adj Flow Rate, veh/h	32	1095	83	185	979	72	215	173	562	157	100	60
Adj No. of Lanes	2	2	1	2	2	1	1	1	1	1	1	0
Peak Hour Factor	0.92	0.92	0.92	0.92	0.92	0.92	0.92	0.92	0.92	0.92	0.92	0.92
Percent Heavy Veh, %	2	2	2	2	2	2	2	2	2	2	2	2
Cap, veh/h	98	1221	683	254	1382	738	541	637	658	397	362	217
Arrive On Green	0.03	0.35	0.35	0.15	0.78	0.78	0.09	0.34	0.34	0.08	0.33	0.33
Sat Flow, veh/h	3442	3539	1583	3442	3539	1583	1774	1863	1583	1774	1092	655
Grp Volume(v), veh/h	32	1095	83	185	979	72	215	173	562	157	0	160
Grp Sat Flow(s),veh/h/ln	1721	1770	1583	1721	1770	1583	1774	1863	1583	1774	0	1747
Q Serve(g_s), s	1.0	32.3	3.5	5.6	14.9	1.1	8.8	7.4	35.4	6.3	0.0	7.4
Cycle Q Clear(g_c), s	1.0	32.3	3.5	5.6	14.9	1.1	8.8	7.4	35.4	6.3	0.0	7.4
Prop In Lane	1.00		1.00	1.00		1.00	1.00		1.00	1.00		0.38
Lane Grp Cap(c), veh/h	98	1221	683	254	1382	738	541	637	658	397	0	579
V/C Ratio(X)	0.33	0.90	0.12	0.73	0.71	0.10	0.40	0.27	0.85	0.40	0.00	0.28
Avail Cap(c_a), veh/h	156	1239	691	735	1834	940	541	637	658	410	0	579
HCM Platoon Ratio	1.00	1.00	1.00	2.00	2.00	2.00	1.00	1.00	1.00	1.00	1.00	1.00
Upstream Filter(I)	1.00	1.00	1.00	0.75	0.75	0.75	1.00	1.00	1.00	1.00	0.00	1.00
Uniform Delay (d), s/veh	52.4	34.2	18.8	45.8	9.0	5.7	21.5	26.2	29.1	21.5	0.0	27.1
Incr Delay (d2), s/veh	1.9	8.8	0.1	3.0	0.6	0.0	0.5	1.0	13.3	0.6	0.0	1.2
Initial Q Delay(d3),s/veh	0.0	0.0	0.0	0.0	0.0	0.0	0.0	0.0	0.0	0.0	0.0	0.0
%ile BackOfQ(95%),veh/ln	0.9	23.9	2.7	5.0	10.6	0.8	7.8	7.2	24.7	5.7	0.0	6.7
LnGrp Delay(d),s/veh	54.3	42.9	18.8	48.9	9.6	5.8	22.0	27.3	42.4	22.1	0.0	28.3
LnGrp LOS	D	D	B	D	A	A	C	C	D	C		C
Approach Vol, veh/h		1210			1236			950			317	
Approach Delay, s/veh		41.6			15.3			35.0			25.2	
Approach LOS		D			B			D			C	

Timer	1	2	3	4	5	6	7	8
Assigned Phs	1	2	3	4	5	6	7	8
Phs Duration (G+Y+Rc), s	12.8	42.1	12.6	42.5	14.0	40.9	7.6	47.4
Change Period (Y+Rc), s	4.5	4.5	4.5	4.5	4.5	4.5	4.5	4.5
Max Green Setting (Gmax), s	9.1	20.9	23.5	38.5	9.5	20.5	5.0	57.0
Max Q Clear Time (g_c+I1), s	8.3	37.4	7.6	34.3	10.8	9.4	3.0	16.9
Green Ext Time (p_c), s	0.0	0.0	0.5	3.7	0.0	3.2	0.0	21.6

Intersection Summary	
HCM 2010 Ctrl Delay	29.7
HCM 2010 LOS	C

Movement	EBL	EBT	EBR	WBL	WBT	WBR	NBL	NBT	NBR	SBL	SBT	SBR
Lane Configurations												
Traffic Volume (veh/h)	66	1276	241	339	1310	93	186	149	258	171	194	123
Future Volume (veh/h)	66	1276	241	339	1310	93	186	149	258	171	194	123
Number	7	4	14	3	8	18	5	2	12	1	6	16
Initial Q (Qb), veh	0	0	0	0	0	0	0	0	0	0	0	0
Ped-Bike Adj(A_pbT)	1.00		1.00	1.00		1.00	1.00		1.00	1.00		1.00
Parking Bus, Adj	1.00	1.00	1.00	1.00	1.00	1.00	1.00	1.00	1.00	1.00	1.00	1.00
Adj Sat Flow, veh/h/ln	1863	1863	1863	1863	1863	1863	1863	1863	1863	1863	1863	1863
Adj Flow Rate, veh/h	72	1387	262	368	1424	101	202	162	280	186	211	134
Adj No. of Lanes	2	2	1	2	2	1	1	1	1	1	1	1
Peak Hour Factor	0.92	0.92	0.92	0.92	0.92	0.92	0.92	0.92	0.92	0.92	0.92	0.92
Percent Heavy Veh, %	2	2	2	2	2	2	2	2	2	2	2	2
Cap, veh/h	139	1535	844	423	1827	948	320	367	506	326	337	286
Arrive On Green	0.04	0.43	0.43	0.25	1.00	1.00	0.10	0.20	0.20	0.08	0.18	0.18
Sat Flow, veh/h	3442	3539	1583	3442	3539	1583	1774	1863	1583	1774	1863	1583
Grp Volume(v), veh/h	72	1387	262	368	1424	101	202	162	280	186	211	134
Grp Sat Flow(s),veh/h/ln	1721	1770	1583	1721	1770	1583	1774	1863	1583	1774	1863	1583
Q Serve(g_s), s	2.3	40.1	10.2	11.3	0.0	0.0	10.2	8.4	16.1	9.1	11.5	8.3
Cycle Q Clear(g_c), s	2.3	40.1	10.2	11.3	0.0	0.0	10.2	8.4	16.1	9.1	11.5	8.3
Prop In Lane	1.00		1.00	1.00		1.00	1.00		1.00	1.00		1.00
Lane Grp Cap(c), veh/h	139	1535	844	423	1827	948	320	367	506	326	337	286
V/C Ratio(X)	0.52	0.90	0.31	0.87	0.78	0.11	0.63	0.44	0.55	0.57	0.63	0.47
Avail Cap(c_a), veh/h	172	1544	848	463	1844	956	320	367	506	326	337	286
HCM Platoon Ratio	1.00	1.00	1.00	2.00	2.00	2.00	1.00	1.00	1.00	1.00	1.00	1.00
Upstream Filter(I)	1.00	1.00	1.00	0.23	0.23	0.23	1.00	1.00	1.00	1.00	1.00	1.00
Uniform Delay (d), s/veh	51.7	29.0	14.4	40.7	0.0	0.0	32.9	38.8	30.9	33.8	41.6	40.3
Incr Delay (d2), s/veh	3.0	7.8	0.2	4.2	0.5	0.0	4.0	3.8	4.3	2.4	8.5	5.4
Initial Q Delay(d3),s/veh	0.0	0.0	0.0	0.0	0.0	0.0	0.0	0.0	0.0	0.0	0.0	0.0
%ile BackOfQ(95%),veh/ln	2.0	28.7	7.9	7.4	0.2	0.0	9.1	8.3	12.1	1.4	11.0	7.3
LnGrp Delay(d),s/veh	54.7	36.8	14.6	44.9	0.5	0.0	36.9	42.7	35.2	36.2	50.2	45.8
LnGrp LOS	D	D	B	D	A	A	D	D	D	D	D	D
Approach Vol, veh/h		1721			1893			644			531	
Approach Delay, s/veh		34.2			9.1			37.6			44.2	
Approach LOS		C			A			D			D	

Timer	1	2	3	4	5	6	7	8
Assigned Phs	1	2	3	4	5	6	7	8
Phs Duration (G+Y+Rc), s	13.6	26.2	18.0	52.2	15.4	24.4	8.9	61.3
Change Period (Y+Rc), s	4.5	4.5	4.5	4.5	4.5	4.5	4.5	4.5
Max Green Setting (Gmax), s	9.1	20.1	14.8	48.0	10.9	18.3	5.5	57.3
Max Q Clear Time (g_c+I1), s	11.1	18.1	13.3	42.1	12.2	13.5	4.3	2.0
Green Ext Time (p_c), s	0.0	0.8	0.2	5.6	0.0	1.6	0.0	41.0

Intersection Summary	
HCM 2010 Ctrl Delay	25.8
HCM 2010 LOS	C

Movement	EBL	EBT	EBR	WBL	WBT	WBR	NBL	NBT	NBR	SBL	SBT	SBR
Lane Configurations												
Traffic Volume (veh/h)	148	789	81	125	1290	229	330	428	286	74	113	85
Future Volume (veh/h)	148	789	81	125	1290	229	330	428	286	74	113	85
Number	7	4	14	3	8	18	5	2	12	1	6	16
Initial Q (Qb), veh	0	0	0	0	0	0	0	0	0	0	0	0
Ped-Bike Adj(A_pbT)	1.00		1.00	1.00		1.00	1.00		1.00	1.00		1.00
Parking Bus, Adj	1.00	1.00	1.00	1.00	1.00	1.00	1.00	1.00	1.00	1.00	1.00	1.00
Adj Sat Flow, veh/h/ln	1863	1863	1863	1863	1863	1863	1863	1863	1863	1863	1863	1863
Adj Flow Rate, veh/h	161	858	88	136	1402	249	359	465	311	80	123	92
Adj No. of Lanes	1	2	1	1	2	1	1	2	1	1	2	1
Peak Hour Factor	0.92	0.92	0.92	0.92	0.92	0.92	0.92	0.92	0.92	0.92	0.92	0.92
Percent Heavy Veh, %	2	2	2	2	2	2	2	2	2	2	2	2
Cap, veh/h	197	1448	797	325	1462	731	484	980	542	283	819	463
Arrive On Green	0.06	0.41	0.41	0.07	0.41	0.41	0.09	0.28	0.28	0.05	0.23	0.23
Sat Flow, veh/h	1774	3539	1583	1774	3539	1583	1774	3539	1583	1774	3539	1583
Grp Volume(v), veh/h	161	858	88	136	1402	249	359	465	311	80	123	92
Grp Sat Flow(s),veh/h/ln	1774	1770	1583	1774	1770	1583	1774	1770	1583	1774	1770	1583
Q Serve(g_s), s	4.8	17.0	2.6	3.9	34.7	9.0	8.5	9.8	14.5	3.1	2.5	3.9
Cycle Q Clear(g_c), s	4.8	17.0	2.6	3.9	34.7	9.0	8.5	9.8	14.5	3.1	2.5	3.9
Prop In Lane	1.00		1.00	1.00		1.00	1.00		1.00	1.00		1.00
Lane Grp Cap(c), veh/h	197	1448	797	325	1462	731	484	980	542	283	819	463
V/C Ratio(X)	0.82	0.59	0.11	0.42	0.96	0.34	0.74	0.47	0.57	0.28	0.15	0.20
Avail Cap(c_a), veh/h	197	1448	797	427	1475	737	484	980	542	332	819	463
HCM Platoon Ratio	1.00	1.00	1.00	1.00	1.00	1.00	1.00	1.00	1.00	1.00	1.00	1.00
Upstream Filter(I)	1.00	1.00	1.00	0.41	0.41	0.41	0.30	0.30	0.30	1.00	1.00	1.00
Uniform Delay (d), s/veh	21.4	20.7	11.7	15.6	25.7	15.5	26.8	27.1	24.2	24.6	27.5	23.9
Incr Delay (d2), s/veh	22.9	0.7	0.1	0.4	7.7	0.1	1.8	0.5	1.3	0.5	0.4	1.0
Initial Q Delay(d3),s/veh	0.0	0.0	0.0	0.0	0.0	0.0	0.0	0.0	0.0	0.0	0.0	0.0
%ile BackOfQ(95%),veh/ln	6.4	13.1	2.1	3.4	22.8	6.0	6.3	6.8	8.8	2.8	2.3	3.3
LnGrp Delay(d),s/veh	44.3	21.4	11.8	15.9	33.4	15.6	28.7	27.6	25.6	25.2	27.9	24.9
LnGrp LOS	D	C	B	B	C	B	C	C	C	C	C	C
Approach Vol, veh/h		1107			1787			1135			295	
Approach Delay, s/veh		24.0			29.6			27.4			26.2	
Approach LOS		C			C			C			C	

Timer	1	2	3	4	5	6	7	8
Assigned Phs	1	2	3	4	5	6	7	8
Phs Duration (G+Y+Rc), s	8.9	29.4	10.4	41.3	13.0	25.3	10.0	41.7
Change Period (Y+Rc), s	4.5	4.5	4.5	4.5	4.5	4.5	4.5	4.5
Max Green Setting (Gmax), s	6.9	22.1	11.0	32.0	8.5	20.5	5.5	37.5
Max Q Clear Time (g_c+I1), s	5.1	16.5	5.9	19.0	10.5	5.9	6.8	36.7
Green Ext Time (p_c), s	0.0	2.4	0.1	10.8	0.0	4.3	0.0	0.5

Intersection Summary	
HCM 2010 Ctrl Delay	27.3
HCM 2010 LOS	C

Movement	EBL	EBT	EBR	WBL	WBT	WBR	NBL	NBT	NBR	SBL	SBT	SBR
Lane Configurations												
Traffic Volume (veh/h)	125	1597	348	204	1000	73	221	254	225	283	505	279
Future Volume (veh/h)	125	1597	348	204	1000	73	221	254	225	283	505	279
Number	7	4	14	3	8	18	5	2	12	1	6	16
Initial Q (Qb), veh	0	0	0	0	0	0	0	0	0	0	0	0
Ped-Bike Adj(A_pbT)	1.00		1.00	1.00		1.00	1.00		1.00	1.00		1.00
Parking Bus, Adj	1.00	1.00	1.00	1.00	1.00	1.00	1.00	1.00	1.00	1.00	1.00	1.00
Adj Sat Flow, veh/h/ln	1863	1863	1863	1863	1863	1863	1863	1863	1863	1863	1863	1863
Adj Flow Rate, veh/h	136	1736	378	222	1087	79	240	276	245	308	549	303
Adj No. of Lanes	1	2	1	1	2	1	1	2	1	1	2	1
Peak Hour Factor	0.92	0.92	0.92	0.92	0.92	0.92	0.92	0.92	0.92	0.92	0.92	0.92
Percent Heavy Veh, %	2	2	2	2	2	2	2	2	2	2	2	2
Cap, veh/h	307	1683	918	225	1797	958	260	615	417	329	589	355
Arrive On Green	0.06	0.48	0.48	0.09	0.51	0.51	0.10	0.17	0.17	0.10	0.17	0.17
Sat Flow, veh/h	1774	3539	1583	1774	3539	1583	1774	3539	1583	1774	3539	1583
Grp Volume(v), veh/h	136	1736	378	222	1087	79	240	276	245	308	549	303
Grp Sat Flow(s),veh/h/ln	1774	1770	1583	1774	1770	1583	1774	1770	1583	1774	1770	1583
Q Serve(g_s), s	4.3	52.3	14.5	9.7	24.0	2.3	11.5	7.7	14.8	10.7	16.8	18.3
Cycle Q Clear(g_c), s	4.3	52.3	14.5	9.7	24.0	2.3	11.5	7.7	14.8	10.7	16.8	18.3
Prop In Lane	1.00		1.00	1.00		1.00	1.00		1.00	1.00		1.00
Lane Grp Cap(c), veh/h	307	1683	918	225	1797	958	260	615	417	329	589	355
V/C Ratio(X)	0.44	1.03	0.41	0.99	0.60	0.08	0.92	0.45	0.59	0.94	0.93	0.85
Avail Cap(c_a), veh/h	441	1683	918	225	1797	958	260	615	417	329	589	355
HCM Platoon Ratio	1.00	1.00	1.00	1.00	1.00	1.00	1.00	1.00	1.00	1.00	1.00	1.00
Upstream Filter(I)	1.00	1.00	1.00	0.73	0.73	0.73	0.73	0.73	0.73	1.00	1.00	1.00
Uniform Delay (d), s/veh	15.6	28.9	12.7	34.7	19.2	9.0	36.4	40.7	35.3	40.1	45.2	40.9
Incr Delay (d2), s/veh	1.0	30.5	0.3	47.3	0.4	0.0	29.5	1.7	4.4	33.4	23.7	22.2
Initial Q Delay(d3),s/veh	0.0	0.0	0.0	0.0	0.0	0.0	0.0	0.0	0.0	0.0	0.0	0.0
%ile BackOfQ(95%),veh/ln	3.8	58.7	10.5	14.0	16.5	1.8	6.5	6.7	10.7	11.6	15.4	16.4
LnGrp Delay(d),s/veh	16.6	59.4	13.0	82.0	19.7	9.1	65.9	42.5	39.7	73.4	68.9	63.1
LnGrp LOS	B	F	B	F	B	A	E	D	D	E	E	E
Approach Vol, veh/h		2250			1388			761			1160	
Approach Delay, s/veh		49.0			29.0			48.9			68.6	
Approach LOS		D			C			D			E	

Timer	1	2	3	4	5	6	7	8
Assigned Phs	1	2	3	4	5	6	7	8
Phs Duration (G+Y+Rc), s	15.2	23.6	14.4	56.8	16.0	22.8	10.9	60.3
Change Period (Y+Rc), s	4.5	4.5	4.5	4.5	4.5	4.5	4.5	4.5
Max Green Setting (Gmax), s	10.7	19.1	9.9	52.3	11.5	18.3	14.7	47.5
Max Q Clear Time (g_c+I1), s	12.7	16.8	11.7	54.3	13.5	20.3	6.3	26.0
Green Ext Time (p_c), s	0.0	1.5	0.0	0.0	0.0	0.0	0.2	19.2

Intersection Summary	
HCM 2010 Ctrl Delay	48.1
HCM 2010 LOS	D

Movement	EBL	EBT	EBR	WBL	WBT	WBR	NBL	NBT	NBR	SBL	SBT	SBR
Lane Configurations												
Traffic Volume (veh/h)	289	963	100	111	967	323	322	1919	370	255	828	293
Future Volume (veh/h)	289	963	100	111	967	323	322	1919	370	255	828	293
Number	7	4	14	3	8	18	5	2	12	1	6	16
Initial Q (Qb), veh	0	0	0	0	0	0	0	0	0	0	0	0
Ped-Bike Adj(A_pbT)	1.00		1.00	1.00		1.00	1.00		1.00	1.00		1.00
Parking Bus, Adj	1.00	1.00	1.00	1.00	1.00	1.00	1.00	1.00	1.00	1.00	1.00	1.00
Adj Sat Flow, veh/h/ln	1863	1863	1863	1863	1863	1863	1863	1863	1863	1863	1863	1863
Adj Flow Rate, veh/h	314	1047	109	121	1051	351	350	2086	402	277	900	318
Adj No. of Lanes	3	2	1	3	2	1	2	3	1	2	3	1
Peak Hour Factor	0.92	0.92	0.92	0.92	0.92	0.92	0.92	0.92	0.92	0.92	0.92	0.92
Percent Heavy Veh, %	2	2	2	2	2	2	2	2	2	2	2	2
Cap, veh/h	354	1132	698	205	1026	595	416	2051	703	295	1873	695
Arrive On Green	0.07	0.32	0.32	0.04	0.29	0.29	0.12	0.40	0.40	0.09	0.37	0.37
Sat Flow, veh/h	5003	3539	1583	5003	3539	1583	3442	5085	1583	3442	5085	1583
Grp Volume(v), veh/h	314	1047	109	121	1051	351	350	2086	402	277	900	318
Grp Sat Flow(s),veh/h/ln	1668	1770	1583	1668	1770	1583	1721	1695	1583	1721	1695	1583
Q Serve(g_s), s	7.5	34.3	5.0	2.9	34.8	21.3	11.9	48.4	22.7	9.6	16.3	16.9
Cycle Q Clear(g_c), s	7.5	34.3	5.0	2.9	34.8	21.3	11.9	48.4	22.7	9.6	16.3	16.9
Prop In Lane	1.00		1.00	1.00		1.00	1.00		1.00	1.00		1.00
Lane Grp Cap(c), veh/h	354	1132	698	205	1026	595	416	2051	703	295	1873	695
V/C Ratio(X)	0.89	0.92	0.16	0.59	1.02	0.59	0.84	1.02	0.57	0.94	0.48	0.46
Avail Cap(c_a), veh/h	354	1132	698	238	1026	595	548	2051	703	295	1873	695
HCM Platoon Ratio	1.00	1.00	1.00	1.00	1.00	1.00	1.00	1.00	1.00	1.00	1.00	1.00
Upstream Filter(I)	0.85	0.85	0.85	0.63	0.63	0.63	0.19	0.19	0.19	1.00	1.00	1.00
Uniform Delay (d), s/veh	55.3	39.4	20.1	56.6	42.6	30.0	51.6	35.8	24.8	54.5	29.1	23.6
Incr Delay (d2), s/veh	19.8	11.0	0.1	1.8	28.6	1.0	1.8	13.3	0.6	36.1	0.9	2.2
Initial Q Delay(d3),s/veh	0.0	0.0	0.0	0.0	0.0	0.0	0.0	0.0	0.0	0.0	0.0	0.0
%ile BackOfQ(95%),veh/ln	7.1	24.9	3.9	2.4	37.9	13.5	7.5	45.2	12.3	10.1	12.4	12.4
LnGrp Delay(d),s/veh	75.1	50.4	20.2	58.4	71.2	31.0	53.4	49.1	25.5	90.7	30.0	25.8
LnGrp LOS	E	D	C	E	F	C	D	F	C	F	C	C
Approach Vol, veh/h		1470			1523			2838			1495	
Approach Delay, s/veh		53.4			60.9			46.3			40.3	
Approach LOS		D			E			D			D	

Timer	1	2	3	4	5	6	7	8
Assigned Phs	1	2	3	4	5	6	7	8
Phs Duration (G+Y+Rc), s	14.8	52.9	9.4	42.9	19.0	48.7	13.0	39.3
Change Period (Y+Rc), s	4.5	4.5	4.5	4.5	4.5	4.5	4.5	4.5
Max Green Setting (Gmax), s	10.3	48.4	5.7	37.6	19.1	39.6	8.5	34.8
Max Q Clear Time (g_c+I1), s	11.6	50.4	4.9	36.3	13.9	18.9	9.5	36.8
Green Ext Time (p_c), s	0.0	0.0	0.0	1.2	0.6	19.1	0.0	0.0

Intersection Summary	
HCM 2010 Ctrl Delay	49.6
HCM 2010 LOS	D

Movement	EBL	EBT	EBR	WBL	WBT	WBR	NBL	NBT	NBR	SBL	SBT	SBR
Lane Configurations												
Traffic Volume (veh/h)	526	959	484	503	488	546	264	1162	380	585	1579	406
Future Volume (veh/h)	526	959	484	503	488	546	264	1162	380	585	1579	406
Number	7	4	14	3	8	18	5	2	12	1	6	16
Initial Q (Qb), veh	0	0	0	0	0	0	0	0	0	0	0	0
Ped-Bike Adj(A_pbT)	1.00		1.00	1.00		1.00	1.00		1.00	1.00		1.00
Parking Bus, Adj	1.00	1.00	1.00	1.00	1.00	1.00	1.00	1.00	1.00	1.00	1.00	1.00
Adj Sat Flow, veh/h/ln	1863	1863	1863	1863	1863	1863	1863	1863	1863	1863	1863	1863
Adj Flow Rate, veh/h	572	1042	526	547	530	593	287	1263	413	636	1716	441
Adj No. of Lanes	3	2	1	3	2	1	2	3	1	2	3	1
Peak Hour Factor	0.92	0.92	0.92	0.92	0.92	0.92	0.92	0.92	0.92	0.92	0.92	0.92
Percent Heavy Veh, %	2	2	2	2	2	2	2	2	2	2	2	2
Cap, veh/h	682	1018	602	563	933	709	318	1352	599	634	1818	782
Arrive On Green	0.14	0.29	0.29	0.11	0.26	0.26	0.09	0.27	0.27	0.18	0.36	0.36
Sat Flow, veh/h	5003	3539	1583	5003	3539	1583	3442	5085	1583	3442	5085	1583
Grp Volume(v), veh/h	572	1042	526	547	530	593	287	1263	413	636	1716	441
Grp Sat Flow(s),veh/h/ln	1668	1770	1583	1668	1770	1583	1721	1695	1583	1721	1695	1583
Q Serve(g_s), s	13.4	34.5	34.5	13.1	15.6	31.6	9.9	29.1	26.3	22.1	39.3	23.5
Cycle Q Clear(g_c), s	13.4	34.5	34.5	13.1	15.6	31.6	9.9	29.1	26.3	22.1	39.3	23.5
Prop In Lane	1.00		1.00	1.00		1.00	1.00		1.00	1.00		1.00
Lane Grp Cap(c), veh/h	682	1018	602	563	933	709	318	1352	599	634	1818	782
V/C Ratio(X)	0.84	1.02	0.87	0.97	0.57	0.84	0.90	0.93	0.69	1.00	0.94	0.56
Avail Cap(c_a), veh/h	830	1018	602	563	933	709	318	1352	599	634	1818	782
HCM Platoon Ratio	1.00	1.00	1.00	1.00	1.00	1.00	1.00	1.00	1.00	1.00	1.00	1.00
Upstream Filter(I)	0.19	0.19	0.19	0.45	0.45	0.45	0.77	0.77	0.77	1.00	1.00	1.00
Uniform Delay (d), s/veh	50.5	42.8	34.5	53.1	38.3	29.2	53.9	43.0	31.4	49.0	37.4	21.3
Incr Delay (d2), s/veh	1.3	19.0	3.0	19.0	0.4	4.1	22.3	10.7	4.9	36.6	11.5	2.9
Initial Q Delay(d3),s/veh	0.0	0.0	0.0	0.0	0.0	0.0	0.0	0.0	0.0	0.0	0.0	0.0
%ile BackOfQ(95%),veh/ln	8.0	35.1	19.6	9.9	10.7	22.8	9.1	20.4	17.3	24.7	27.6	16.3
LnGrp Delay(d),s/veh	51.9	61.8	37.6	72.0	38.6	33.3	76.2	53.7	36.3	85.5	48.8	24.2
LnGrp LOS	D	F	D	E	D	C	E	D	D	F	D	C
Approach Vol, veh/h		2140			1670			1963			2793	
Approach Delay, s/veh		53.2			47.7			53.3			53.3	
Approach LOS		D			D			D			D	

Timer	1	2	3	4	5	6	7	8
Assigned Phs	1	2	3	4	5	6	7	8
Phs Duration (G+Y+Rc), s	26.6	36.4	18.0	39.0	15.6	47.4	20.9	36.1
Change Period (Y+Rc), s	4.5	4.5	4.5	4.5	4.5	4.5	4.5	4.5
Max Green Setting (Gmax), s	22.1	31.9	13.5	34.5	11.1	42.9	19.9	28.1
Max Q Clear Time (g_c+I1), s	24.1	31.1	15.1	36.5	11.9	41.3	15.4	33.6
Green Ext Time (p_c), s	0.0	0.8	0.0	0.0	0.0	1.6	1.0	0.0

Intersection Summary	
HCM 2010 Ctrl Delay	52.2
HCM 2010 LOS	D

Movement	EBL	EBT	EBR	WBL	WBT	WBR	NBL	NBT	NBR	SBL	SBT	SBR
Lane Configurations												
Traffic Volume (veh/h)	227	1601	60	120	1223	458	191	637	576	287	197	95
Future Volume (veh/h)	227	1601	60	120	1223	458	191	637	576	287	197	95
Number	7	4	14	3	8	18	5	2	12	1	6	16
Initial Q (Qb), veh	0	0	0	0	0	0	0	0	0	0	0	0
Ped-Bike Adj(A_pbT)	1.00		1.00	1.00		1.00	1.00		1.00	1.00		1.00
Parking Bus, Adj	1.00	1.00	1.00	1.00	1.00	1.00	1.00	1.00	1.00	1.00	1.00	1.00
Adj Sat Flow, veh/h/ln	1863	1863	1863	1863	1863	1863	1863	1863	1863	1863	1863	1863
Adj Flow Rate, veh/h	247	1740	65	130	1329	498	208	692	626	312	214	103
Adj No. of Lanes	2	3	1	2	3	2	2	2	2	2	2	1
Peak Hour Factor	0.92	0.92	0.92	0.92	0.92	0.92	0.92	0.92	0.92	0.92	0.92	0.92
Percent Heavy Veh, %	2	2	2	2	2	2	2	2	2	2	2	2
Cap, veh/h	310	1935	728	189	1756	1264	272	1035	968	373	1139	652
Arrive On Green	0.09	0.38	0.38	0.06	0.35	0.35	0.08	0.29	0.29	0.11	0.32	0.32
Sat Flow, veh/h	3442	5085	1583	3442	5085	2787	3442	3539	2787	3442	3539	1583
Grp Volume(v), veh/h	247	1740	65	130	1329	498	208	692	626	312	214	103
Grp Sat Flow(s),veh/h/ln	1721	1695	1583	1721	1695	1393	1721	1770	1393	1721	1770	1583
Q Serve(g_s), s	7.7	35.4	2.5	4.1	25.5	13.1	6.5	18.9	20.8	9.8	4.8	4.5
Cycle Q Clear(g_c), s	7.7	35.4	2.5	4.1	25.5	13.1	6.5	18.9	20.8	9.8	4.8	4.5
Prop In Lane	1.00		1.00	1.00		1.00	1.00		1.00	1.00		1.00
Lane Grp Cap(c), veh/h	310	1935	728	189	1756	1264	272	1035	968	373	1139	652
V/C Ratio(X)	0.80	0.90	0.09	0.69	0.76	0.39	0.76	0.67	0.65	0.84	0.19	0.16
Avail Cap(c_a), veh/h	379	1935	728	285	1789	1282	366	1035	968	404	1139	652
HCM Platoon Ratio	1.00	1.00	1.00	1.00	1.00	1.00	1.00	1.00	1.00	1.00	1.00	1.00
Upstream Filter(I)	0.43	0.43	0.43	0.41	0.41	0.41	0.35	0.35	0.35	1.00	1.00	1.00
Uniform Delay (d), s/veh	49.0	32.1	16.8	51.0	31.9	20.0	49.6	34.2	30.2	48.1	26.9	20.3
Incr Delay (d2), s/veh	4.2	2.8	0.0	1.8	0.8	0.1	2.4	1.2	1.2	13.5	0.4	0.5
Initial Q Delay(d3),s/veh	0.0	0.0	0.0	0.0	0.0	0.0	0.0	0.0	0.0	0.0	0.0	0.0
%ile BackOfQ(95%),veh/ln	6.0	21.5	2.0	3.5	15.7	7.4	4.9	12.4	10.9	9.1	4.3	3.7
LnGrp Delay(d),s/veh	53.2	34.9	16.8	52.9	32.7	20.1	52.0	35.4	31.4	61.6	27.3	20.9
LnGrp LOS	D	C	B	D	C	C	D	D	C	E	C	C
Approach Vol, veh/h		2052			1957			1526			629	
Approach Delay, s/veh		36.5			30.8			36.0			43.3	
Approach LOS		D			C			D			D	

Timer	1	2	3	4	5	6	7	8
Assigned Phs	1	2	3	4	5	6	7	8
Phs Duration (G+Y+Rc), s	16.4	36.7	10.6	46.4	13.2	39.9	14.4	42.5
Change Period (Y+Rc), s	4.5	4.5	4.5	4.5	4.5	4.5	4.5	4.5
Max Green Setting (Gmax), s	12.9	28.3	9.1	41.7	11.7	29.5	12.1	38.7
Max Q Clear Time (g_c+I1), s	11.8	22.8	6.1	37.4	8.5	6.8	9.7	27.5
Green Ext Time (p_c), s	0.1	3.8	0.1	4.1	0.2	9.9	0.2	10.5

Intersection Summary	
HCM 2010 Ctrl Delay	35.3
HCM 2010 LOS	D

Movement	EBL	EBT	EBR	WBL	WBT	WBR	NBL	NBT	NBR	SBL	SBT	SBR
Lane Configurations												
Traffic Volume (veh/h)	97	1647	157	419	1858	25	76	409	185	369	851	151
Future Volume (veh/h)	97	1647	157	419	1858	25	76	409	185	369	851	151
Number	7	4	14	3	8	18	5	2	12	1	6	16
Initial Q (Qb), veh	0	0	0	0	0	0	0	0	0	0	0	0
Ped-Bike Adj(A_pbT)	1.00		1.00	1.00		1.00	1.00		1.00	1.00		1.00
Parking Bus, Adj	1.00	1.00	1.00	1.00	1.00	1.00	1.00	1.00	1.00	1.00	1.00	1.00
Adj Sat Flow, veh/h/ln	1863	1863	1863	1863	1863	1863	1863	1863	1863	1863	1863	1863
Adj Flow Rate, veh/h	105	1790	171	455	2020	27	83	445	201	401	925	164
Adj No. of Lanes	2	3	1	2	3	2	2	2	2	2	2	1
Peak Hour Factor	0.92	0.92	0.92	0.92	0.92	0.92	0.92	0.92	0.92	0.92	0.92	0.92
Percent Heavy Veh, %	2	2	2	2	2	2	2	2	2	2	2	2
Cap, veh/h	163	1754	618	468	2205	1562	155	750	970	437	1040	540
Arrive On Green	0.05	0.34	0.34	0.14	0.43	0.43	0.05	0.21	0.21	0.13	0.29	0.29
Sat Flow, veh/h	3442	5085	1583	3442	5085	2787	3442	3539	2787	3442	3539	1583
Grp Volume(v), veh/h	105	1790	171	455	2020	27	83	445	201	401	925	164
Grp Sat Flow(s),veh/h/ln	1721	1695	1583	1721	1695	1393	1721	1770	1393	1721	1770	1583
Q Serve(g_s), s	3.0	34.5	7.4	13.2	37.3	0.4	2.4	11.3	5.1	11.5	25.0	7.6
Cycle Q Clear(g_c), s	3.0	34.5	7.4	13.2	37.3	0.4	2.4	11.3	5.1	11.5	25.0	7.6
Prop In Lane	1.00		1.00	1.00		1.00	1.00		1.00	1.00		1.00
Lane Grp Cap(c), veh/h	163	1754	618	468	2205	1562	155	750	970	437	1040	540
V/C Ratio(X)	0.65	1.02	0.28	0.97	0.92	0.02	0.54	0.59	0.21	0.92	0.89	0.30
Avail Cap(c_a), veh/h	176	1754	618	468	2205	1562	176	750	970	437	1040	540
HCM Platoon Ratio	1.00	1.00	1.00	1.00	1.00	1.00	1.00	1.00	1.00	1.00	1.00	1.00
Upstream Filter(I)	0.26	0.26	0.26	0.43	0.43	0.43	0.95	0.95	0.95	1.00	1.00	1.00
Uniform Delay (d), s/veh	46.8	32.8	20.9	43.0	26.6	9.7	46.7	35.5	22.9	43.1	33.7	24.2
Incr Delay (d2), s/veh	1.9	16.5	0.1	20.9	3.1	0.0	2.7	3.3	0.5	24.1	11.3	1.4
Initial Q Delay(d3),s/veh	0.0	0.0	0.0	0.0	0.0	0.0	0.0	0.0	0.0	0.0	0.0	0.0
%ile BackOfQ(95%),veh/ln	2.5	33.8	4.7	10.6	22.6	0.3	2.1	9.7	3.6	11.2	19.9	6.4
LnGrp Delay(d),s/veh	48.7	49.2	20.9	63.9	29.7	9.7	49.5	38.8	23.4	67.3	45.0	25.6
LnGrp LOS	D	F	C	E	C	A	D	D	C	E	D	C
Approach Vol, veh/h		2066			2502			729			1490	
Approach Delay, s/veh		46.8			35.7			35.8			48.9	
Approach LOS		D			D			D			D	

Timer	1	2	3	4	5	6	7	8
Assigned Phs	1	2	3	4	5	6	7	8
Phs Duration (G+Y+Rc), s	17.2	25.7	18.1	39.0	9.0	33.9	9.2	47.9
Change Period (Y+Rc), s	4.5	4.5	4.5	4.5	4.5	4.5	4.5	4.5
Max Green Setting (Gmax), s	12.7	21.2	13.6	34.5	5.1	28.8	5.1	43.0
Max Q Clear Time (g_c+I1), s	13.5	13.3	15.2	36.5	4.4	27.0	5.0	39.3
Green Ext Time (p_c), s	0.0	5.6	0.0	0.0	0.0	1.5	0.0	3.6

Intersection Summary	
HCM 2010 Ctrl Delay	42.0
HCM 2010 LOS	D

Movement	EBL	EBT	EBR	WBL	WBT	WBR	NBL	NBT	NBR	SBL	SBT	SBR
Lane Configurations												
Traffic Volume (veh/h)	1006	624	404	218	463	543	811	1179	587	48	44	67
Future Volume (veh/h)	1006	624	404	218	463	543	811	1179	587	48	44	67
Number	7	4	14	3	8	18	5	2	12	1	6	16
Initial Q (Qb), veh	0	0	0	0	0	0	0	0	0	0	0	0
Ped-Bike Adj(A_pbT)	1.00		1.00	1.00		1.00	1.00		1.00	1.00		1.00
Parking Bus, Adj	1.00	1.00	1.00	1.00	1.00	1.00	1.00	1.00	1.00	1.00	1.00	1.00
Adj Sat Flow, veh/h/ln	1863	1863	1863	1863	1863	1863	1863	1863	1863	1863	1863	1863
Adj Flow Rate, veh/h	1093	678	439	237	503	590	882	1282	638	52	48	73
Adj No. of Lanes	3	3	2	2	3	2	3	3	1	2	3	2
Peak Hour Factor	0.92	0.92	0.92	0.92	0.92	0.92	0.92	0.92	0.92	0.92	0.92	0.92
Percent Heavy Veh, %	2	2	2	2	2	2	2	2	2	2	2	2
Cap, veh/h	1095	1652	1404	324	1017	670	895	1733	688	139	1028	1174
Arrive On Green	0.22	0.32	0.32	0.09	0.20	0.20	0.18	0.34	0.34	0.04	0.20	0.20
Sat Flow, veh/h	5003	5085	2787	3442	5085	2787	5003	5085	1583	3442	5085	2787
Grp Volume(v), veh/h	1093	678	439	237	503	590	882	1282	638	52	48	73
Grp Sat Flow(s),veh/h/ln	1668	1695	1393	1721	1695	1393	1668	1695	1583	1721	1695	1393
Q Serve(g_s), s	19.7	9.3	8.4	6.0	7.9	18.0	15.8	20.0	30.7	1.3	0.7	1.4
Cycle Q Clear(g_c), s	19.7	9.3	8.4	6.0	7.9	18.0	15.8	20.0	30.7	1.3	0.7	1.4
Prop In Lane	1.00		1.00	1.00		1.00	1.00		1.00	1.00		1.00
Lane Grp Cap(c), veh/h	1095	1652	1404	324	1017	670	895	1733	688	139	1028	1174
V/C Ratio(X)	1.00	0.41	0.31	0.73	0.49	0.88	0.99	0.74	0.93	0.37	0.05	0.06
Avail Cap(c_a), veh/h	1095	1652	1404	616	1017	670	895	1733	688	279	1028	1174
HCM Platoon Ratio	1.00	1.00	1.00	1.00	1.00	1.00	1.00	1.00	1.00	1.00	1.00	1.00
Upstream Filter(I)	0.48	0.48	0.48	1.00	1.00	1.00	1.00	1.00	1.00	1.00	1.00	1.00
Uniform Delay (d), s/veh	35.1	23.7	13.2	39.7	32.0	32.9	36.8	26.2	24.1	42.1	28.9	15.5
Incr Delay (d2), s/veh	18.4	0.1	0.1	3.2	0.4	13.0	26.4	2.9	20.4	1.7	0.1	0.1
Initial Q Delay(d3),s/veh	0.0	0.0	0.0	0.0	0.0	0.0	0.0	0.0	0.0	0.0	0.0	0.0
%ile BackOfQ(95%),veh/ln	14.6	6.7	5.3	5.4	6.7	13.0	14.5	15.0	25.9	1.2	0.6	1.0
LnGrp Delay(d),s/veh	53.5	23.8	13.2	42.9	32.3	45.9	63.3	29.0	44.5	43.7	29.0	15.6
LnGrp LOS	D	C	B	D	C	D	E	C	D	D	C	B
Approach Vol, veh/h		2210			1330			2802			173	
Approach Delay, s/veh		36.4			40.2			43.3			27.8	
Approach LOS		D			D			D			C	

Timer	1	2	3	4	5	6	7	8
Assigned Phs	1	2	3	4	5	6	7	8
Phs Duration (G+Y+Rc), s	8.1	35.2	13.0	33.7	20.6	22.7	24.2	22.5
Change Period (Y+Rc), s	4.5	4.5	4.5	4.5	4.5	4.5	4.5	4.5
Max Green Setting (Gmax), s	7.3	27.0	16.1	21.6	16.1	18.2	19.7	18.0
Max Q Clear Time (g_c+I1), s	3.3	32.7	8.0	11.3	17.8	3.4	21.7	20.0
Green Ext Time (p_c), s	0.0	0.0	0.5	7.5	0.0	9.7	0.0	0.0

Intersection Summary	
HCM 2010 Ctrl Delay	39.9
HCM 2010 LOS	D

Movement	EBL	EBT	EBR	WBL	WBT	WBR	NBL	NBT	NBR	SBL	SBT	SBR
Lane Configurations												
Traffic Volume (veh/h)	466	675	708	414	665	273	694	1074	353	394	1622	773
Future Volume (veh/h)	466	675	708	414	665	273	694	1074	353	394	1622	773
Number	7	4	14	3	8	18	5	2	12	1	6	16
Initial Q (Qb), veh	0	0	0	0	0	0	0	0	0	0	0	0
Ped-Bike Adj(A_pbT)	1.00		1.00	1.00		1.00	1.00		1.00	1.00		1.00
Parking Bus, Adj	1.00	1.00	1.00	1.00	1.00	1.00	1.00	1.00	1.00	1.00	1.00	1.00
Adj Sat Flow, veh/h/ln	1863	1863	1863	1863	1863	1863	1863	1863	1863	1863	1863	1863
Adj Flow Rate, veh/h	507	734	770	450	723	297	754	1167	384	428	1763	840
Adj No. of Lanes	3	3	2	2	3	2	3	3	1	2	3	2
Peak Hour Factor	0.92	0.92	0.92	0.92	0.92	0.92	0.92	0.92	0.92	0.92	0.92	0.92
Percent Heavy Veh, %	2	2	2	2	2	2	2	2	2	2	2	2
Cap, veh/h	607	920	931	465	990	944	765	1829	783	496	1785	1316
Arrive On Green	0.12	0.18	0.18	0.14	0.19	0.19	0.15	0.36	0.36	0.14	0.35	0.35
Sat Flow, veh/h	5003	5085	2787	3442	5085	2787	5003	5085	1583	3442	5085	2787
Grp Volume(v), veh/h	507	734	770	450	723	297	754	1167	384	428	1763	840
Grp Sat Flow(s),veh/h/ln	1668	1695	1393	1721	1695	1393	1668	1695	1583	1721	1695	1393
Q Serve(g_s), s	9.9	13.8	18.1	13.0	13.3	7.9	15.0	19.1	16.2	12.2	34.4	22.8
Cycle Q Clear(g_c), s	9.9	13.8	18.1	13.0	13.3	7.9	15.0	19.1	16.2	12.2	34.4	22.8
Prop In Lane	1.00		1.00	1.00		1.00	1.00		1.00	1.00		1.00
Lane Grp Cap(c), veh/h	607	920	931	465	990	944	765	1829	783	496	1785	1316
V/C Ratio(X)	0.83	0.80	0.83	0.97	0.73	0.31	0.99	0.64	0.49	0.86	0.99	0.64
Avail Cap(c_a), veh/h	645	920	931	465	990	944	765	1829	783	540	1785	1316
HCM Platoon Ratio	1.00	1.00	1.00	1.00	1.00	1.00	1.00	1.00	1.00	1.00	1.00	1.00
Upstream Filter(I)	0.24	0.24	0.24	1.00	1.00	1.00	1.00	1.00	1.00	1.00	1.00	1.00
Uniform Delay (d), s/veh	43.0	39.2	30.6	43.0	37.8	24.5	42.2	26.6	16.9	41.8	32.2	19.9
Incr Delay (d2), s/veh	2.4	1.3	1.6	33.6	2.8	0.2	28.7	1.7	2.2	12.7	18.6	2.4
Initial Q Delay(d3),s/veh	0.0	0.0	0.0	0.0	0.0	0.0	0.0	0.0	0.0	0.0	0.0	0.0
%ile BackOfQ(95%),veh/ln	6.4	8.6	12.6	13.1	10.7	5.5	13.9	14.1	11.9	10.9	26.2	14.1
LnGrp Delay(d),s/veh	45.3	40.5	32.3	76.6	40.6	24.7	71.0	28.3	19.0	54.5	50.8	22.3
LnGrp LOS	D	D	C	E	D	C	E	C	B	D	D	C
Approach Vol, veh/h		2011			1470			2305			3031	
Approach Delay, s/veh		38.5			48.4			40.7			43.4	
Approach LOS		D			D			D			D	

Timer	1	2	3	4	5	6	7	8
Assigned Phs	1	2	3	4	5	6	7	8
Phs Duration (G+Y+Rc), s	18.9	40.5	18.0	22.6	19.8	39.6	16.6	24.0
Change Period (Y+Rc), s	4.5	4.5	4.5	4.5	4.5	4.5	4.5	4.5
Max Green Setting (Gmax), s	15.7	34.7	13.5	18.1	15.3	35.1	12.9	18.7
Max Q Clear Time (g_c+I1), s	14.2	21.1	15.0	20.1	17.0	36.4	11.9	15.3
Green Ext Time (p_c), s	0.3	13.1	0.0	0.0	0.0	0.0	0.2	3.0

Intersection Summary	
HCM 2010 Ctrl Delay	42.4
HCM 2010 LOS	D

Movement	EBL	EBT	EBR	WBL	WBT	WBR	NBL	NBT	NBR	SBL	SBT	SBR
Lane Configurations												
Traffic Volume (veh/h)	464	269	11	25	465	52	168	531	23	24	62	176
Future Volume (veh/h)	464	269	11	25	465	52	168	531	23	24	62	176
Number	7	4	14	3	8	18	5	2	12	1	6	16
Initial Q (Qb), veh	0	0	0	0	0	0	0	0	0	0	0	0
Ped-Bike Adj(A_pbT)	1.00		1.00	1.00		1.00	1.00		1.00	1.00		1.00
Parking Bus, Adj	1.00	1.00	1.00	1.00	1.00	1.00	1.00	1.00	1.00	1.00	1.00	1.00
Adj Sat Flow, veh/h/ln	1863	1863	1900	1863	1863	1900	1863	1863	1900	1863	1863	1863
Adj Flow Rate, veh/h	504	292	12	27	505	57	183	577	25	26	67	191
Adj No. of Lanes	2	1	0	1	1	0	1	2	0	1	1	1
Peak Hour Factor	0.92	0.92	0.92	0.92	0.92	0.92	0.92	0.92	0.92	0.92	0.92	0.92
Percent Heavy Veh, %	2	2	2	2	2	2	2	2	2	2	2	2
Cap, veh/h	574	829	34	48	538	61	429	966	42	237	460	655
Arrive On Green	0.17	0.47	0.47	0.03	0.33	0.33	0.06	0.28	0.28	0.03	0.25	0.25
Sat Flow, veh/h	3442	1777	73	1774	1644	186	1774	3456	150	1774	1863	1583
Grp Volume(v), veh/h	504	0	304	27	0	562	183	295	307	26	67	191
Grp Sat Flow(s),veh/h/ln	1721	0	1850	1774	0	1830	1774	1770	1836	1774	1863	1583
Q Serve(g_s), s	12.9	0.0	9.4	1.4	0.0	26.8	5.3	13.0	13.0	1.0	2.5	7.2
Cycle Q Clear(g_c), s	12.9	0.0	9.4	1.4	0.0	26.8	5.3	13.0	13.0	1.0	2.5	7.2
Prop In Lane	1.00		0.04	1.00		0.10	1.00		0.08	1.00		1.00
Lane Grp Cap(c), veh/h	574	0	863	48	0	599	429	494	513	237	460	655
V/C Ratio(X)	0.88	0.00	0.35	0.56	0.00	0.94	0.43	0.60	0.60	0.11	0.15	0.29
Avail Cap(c_a), veh/h	593	0	863	110	0	620	429	494	513	288	460	655
HCM Platoon Ratio	1.00	1.00	1.00	1.00	1.00	1.00	1.00	1.00	1.00	1.00	1.00	1.00
Upstream Filter(I)	1.00	0.00	1.00	0.99	0.00	0.99	1.00	1.00	1.00	0.98	0.98	0.98
Uniform Delay (d), s/veh	36.6	0.0	15.3	43.2	0.0	29.4	24.6	28.0	28.1	24.7	26.5	17.6
Incr Delay (d2), s/veh	13.8	0.0	0.2	9.6	0.0	21.7	0.7	5.2	5.1	0.2	0.7	1.1
Initial Q Delay(d3),s/veh	0.0	0.0	0.0	0.0	0.0	0.0	0.0	0.0	0.0	0.0	0.0	0.0
%ile BackOfQ(95%),veh/ln	11.6	0.0	8.5	1.4	0.0	24.0	2.2	11.4	11.7	0.9	2.5	6.1
LnGrp Delay(d),s/veh	50.4	0.0	15.6	52.8	0.0	51.1	25.3	33.3	33.1	24.9	27.1	18.7
LnGrp LOS	D		B	D		D	C	C	C	C	C	B
Approach Vol, veh/h		808			589			785			284	
Approach Delay, s/veh		37.3			51.2			31.4			21.2	
Approach LOS		D			D			C			C	

Timer	1	2	3	4	5	6	7	8
Assigned Phs	1	2	3	4	5	6	7	8
Phs Duration (G+Y+Rc), s	6.9	29.6	7.0	46.5	9.8	26.7	19.5	33.9
Change Period (Y+Rc), s	4.5	4.5	4.5	4.5	4.5	4.5	4.5	4.5
Max Green Setting (Gmax), s	5.0	21.0	5.6	40.4	5.3	20.7	15.5	30.5
Max Q Clear Time (g_c+I1), s	3.0	15.0	3.4	11.4	7.3	9.2	14.9	28.8
Green Ext Time (p_c), s	0.0	2.2	0.0	6.4	0.0	3.3	0.2	0.6

Intersection Summary	
HCM 2010 Ctrl Delay	36.9
HCM 2010 LOS	D

Movement	EBL	EBT	EBR	WBL	WBT	WBR	NBL	NBT	NBR	SBL	SBT	SBR
Lane Configurations												
Traffic Volume (veh/h)	358	158	244	126	170	185	57	71	27	214	385	458
Future Volume (veh/h)	358	158	244	126	170	185	57	71	27	214	385	458
Number	7	4	14	3	8	18	5	2	12	1	6	16
Initial Q (Qb), veh	0	0	0	0	0	0	0	0	0	0	0	0
Ped-Bike Adj(A_pbT)	1.00		1.00	1.00		1.00	1.00		1.00	1.00		1.00
Parking Bus, Adj	1.00	1.00	1.00	1.00	1.00	1.00	1.00	1.00	1.00	1.00	1.00	1.00
Adj Sat Flow, veh/h/ln	1863	1863	1900	1863	1863	1900	1863	1863	1900	1863	1863	1863
Adj Flow Rate, veh/h	389	172	265	137	185	201	62	77	29	233	418	498
Adj No. of Lanes	2	1	0	1	1	0	1	2	0	1	1	1
Peak Hour Factor	0.92	0.92	0.92	0.92	0.92	0.92	0.92	0.92	0.92	0.92	0.92	0.92
Percent Heavy Veh, %	2	2	2	2	2	2	2	2	2	2	2	2
Cap, veh/h	467	195	301	169	208	226	268	769	276	630	682	794
Arrive On Green	0.14	0.30	0.30	0.10	0.25	0.25	0.04	0.30	0.30	0.11	0.37	0.37
Sat Flow, veh/h	3442	662	1020	1774	818	888	1774	2555	916	1774	1863	1583
Grp Volume(v), veh/h	389	0	437	137	0	386	62	52	54	233	418	498
Grp Sat Flow(s),veh/h/ln	1721	0	1683	1774	0	1706	1774	1770	1701	1774	1863	1583
Q Serve(g_s), s	9.9	0.0	22.3	6.8	0.0	19.6	2.1	1.9	2.1	7.7	16.5	20.6
Cycle Q Clear(g_c), s	9.9	0.0	22.3	6.8	0.0	19.6	2.1	1.9	2.1	7.7	16.5	20.6
Prop In Lane	1.00		0.61	1.00		0.52	1.00		0.54	1.00		1.00
Lane Grp Cap(c), veh/h	467	0	496	169	0	434	268	533	512	630	682	794
V/C Ratio(X)	0.83	0.00	0.88	0.81	0.00	0.89	0.23	0.10	0.11	0.37	0.61	0.63
Avail Cap(c_a), veh/h	532	0	514	207	0	457	289	533	512	652	682	794
HCM Platoon Ratio	1.00	1.00	1.00	1.00	1.00	1.00	1.00	1.00	1.00	1.00	1.00	1.00
Upstream Filter(I)	1.00	0.00	1.00	0.74	0.00	0.74	1.00	1.00	1.00	0.57	0.57	0.57
Uniform Delay (d), s/veh	37.9	0.0	30.2	39.9	0.0	32.3	20.7	22.7	22.7	16.8	23.3	16.3
Incr Delay (d2), s/veh	9.8	0.0	15.8	13.6	0.0	14.4	0.4	0.4	0.4	0.2	2.3	2.1
Initial Q Delay(d3),s/veh	0.0	0.0	0.0	0.0	0.0	0.0	0.0	0.0	0.0	0.0	0.0	0.0
%ile BackOfQ(95%),veh/ln	9.1	0.0	18.3	6.8	0.0	15.6	1.9	1.8	1.9	6.1	12.6	13.2
LnGrp Delay(d),s/veh	47.7	0.0	46.0	53.5	0.0	46.7	21.2	23.0	23.1	17.0	25.7	18.4
LnGrp LOS	D		D	D		D	C	C	C	B	C	B
Approach Vol, veh/h		826			523			168			1149	
Approach Delay, s/veh		46.8			48.5			22.4			20.8	
Approach LOS		D			D			C			C	

Timer	1	2	3	4	5	6	7	8
Assigned Phs	1	2	3	4	5	6	7	8
Phs Duration (G+Y+Rc), s	14.3	31.6	13.1	31.1	8.4	37.4	16.7	27.4
Change Period (Y+Rc), s	4.5	4.5	4.5	4.5	4.5	4.5	4.5	4.5
Max Green Setting (Gmax), s	10.9	23.1	10.5	27.5	5.0	29.0	13.9	24.1
Max Q Clear Time (g_c+I1), s	9.7	4.1	8.8	24.3	4.1	22.6	11.9	21.6
Green Ext Time (p_c), s	0.1	4.6	0.1	1.6	0.0	2.6	0.3	1.3

Intersection Summary	
HCM 2010 Ctrl Delay	34.4
HCM 2010 LOS	C

Movement	EBL	EBT	EBR	WBL	WBT	WBR	NBL	NBT	NBR	SBL	SBT	SBR
Lane Configurations												
Traffic Volume (veh/h)	267	131	82	42	65	135	67	2062	108	96	649	60
Future Volume (veh/h)	267	131	82	42	65	135	67	2062	108	96	649	60
Number	7	4	14	3	8	18	5	2	12	1	6	16
Initial Q (Qb), veh	0	0	0	0	0	0	0	0	0	0	0	0
Ped-Bike Adj(A_pbT)	1.00		1.00	1.00		1.00	1.00		1.00	1.00		1.00
Parking Bus, Adj	1.00	1.00	1.00	1.00	1.00	1.00	1.00	1.00	1.00	1.00	1.00	1.00
Adj Sat Flow, veh/h/ln	1863	1863	1900	1863	1863	1863	1863	1863	1863	1863	1863	1863
Adj Flow Rate, veh/h	290	142	89	46	71	147	73	2241	117	104	705	65
Adj No. of Lanes	1	1	0	1	1	1	1	3	1	1	3	1
Peak Hour Factor	0.92	0.92	0.92	0.92	0.92	0.92	0.92	0.92	0.92	0.92	0.92	0.92
Percent Heavy Veh, %	2	2	2	2	2	2	2	2	2	2	2	2
Cap, veh/h	317	175	109	187	239	285	497	2786	928	200	2810	989
Arrive On Green	0.07	0.16	0.16	0.04	0.13	0.13	0.05	0.55	0.55	0.05	0.55	0.55
Sat Flow, veh/h	1774	1072	672	1774	1863	1583	1774	5085	1583	1774	5085	1583
Grp Volume(v), veh/h	290	0	231	46	71	147	73	2241	117	104	705	65
Grp Sat Flow(s),veh/h/ln	1774	0	1744	1774	1863	1583	1774	1695	1583	1774	1695	1583
Q Serve(g_s), s	6.5	0.0	11.5	2.0	3.1	7.6	1.6	32.1	3.0	2.2	6.5	1.4
Cycle Q Clear(g_c), s	6.5	0.0	11.5	2.0	3.1	7.6	1.6	32.1	3.0	2.2	6.5	1.4
Prop In Lane	1.00		0.39	1.00		1.00	1.00		1.00	1.00		1.00
Lane Grp Cap(c), veh/h	317	0	284	187	239	285	497	2786	928	200	2810	989
V/C Ratio(X)	0.91	0.00	0.81	0.25	0.30	0.52	0.15	0.80	0.13	0.52	0.25	0.07
Avail Cap(c_a), veh/h	317	0	372	224	373	398	515	2786	928	207	2810	989
HCM Platoon Ratio	1.00	1.00	1.00	1.00	1.00	1.00	1.00	1.00	1.00	1.00	1.00	1.00
Upstream Filter(I)	0.96	0.00	0.96	1.00	1.00	1.00	1.00	1.00	1.00	0.88	0.88	0.88
Uniform Delay (d), s/veh	36.6	0.0	36.4	32.5	35.5	33.4	7.9	16.4	8.3	18.8	10.5	6.6
Incr Delay (d2), s/veh	28.9	0.0	9.7	0.7	0.7	1.4	0.1	2.6	0.3	1.9	0.2	0.1
Initial Q Delay(d3),s/veh	0.0	0.0	0.0	0.0	0.0	0.0	0.0	0.0	0.0	0.0	0.0	0.0
%ile BackOfQ(95%),veh/ln	10.7	0.0	10.3	1.8	3.0	6.1	1.4	21.8	2.4	2.7	5.5	1.2
LnGrp Delay(d),s/veh	65.5	0.0	46.0	33.2	36.2	34.8	8.1	19.0	8.6	20.6	10.6	6.7
LnGrp LOS	E		D	C	D	C	A	B	A	C	B	A
Approach Vol, veh/h		521			264			2431			874	
Approach Delay, s/veh		56.9			34.9			18.2			11.5	
Approach LOS		E			C			B			B	

Timer	1	2	3	4	5	6	7	8
Assigned Phs	1	2	3	4	5	6	7	8
Phs Duration (G+Y+Rc), s	9.1	53.8	7.9	19.1	8.7	54.2	11.0	16.1
Change Period (Y+Rc), s	4.5	4.5	4.5	4.5	4.5	4.5	4.5	4.5
Max Green Setting (Gmax), s	5.0	42.5	5.3	19.2	5.1	42.4	6.5	18.0
Max Q Clear Time (g_c+I1), s	4.2	34.1	4.0	13.5	3.6	8.5	8.5	9.6
Green Ext Time (p_c), s	0.0	8.0	0.0	1.1	0.0	28.3	0.0	1.5

Intersection Summary	
HCM 2010 Ctrl Delay	22.8
HCM 2010 LOS	C

Movement	EBL	EBT	EBR	WBL	WBT	WBR	NBL	NBT	NBR	SBL	SBT	SBR
Lane Configurations												
Traffic Volume (veh/h)	156	139	139	135	207	151	123	1152	44	97	2106	270
Future Volume (veh/h)	156	139	139	135	207	151	123	1152	44	97	2106	270
Number	7	4	14	3	8	18	5	2	12	1	6	16
Initial Q (Qb), veh	0	0	0	0	0	0	0	0	0	0	0	0
Ped-Bike Adj(A_pbT)	1.00		1.00	1.00		1.00	1.00		1.00	1.00		1.00
Parking Bus, Adj	1.00	1.00	1.00	1.00	1.00	1.00	1.00	1.00	1.00	1.00	1.00	1.00
Adj Sat Flow, veh/h/ln	1863	1863	1900	1863	1863	1863	1863	1863	1863	1863	1863	1863
Adj Flow Rate, veh/h	170	151	151	147	225	164	134	1252	48	105	2289	293
Adj No. of Lanes	1	1	0	1	1	1	1	3	1	1	3	1
Peak Hour Factor	0.92	0.92	0.92	0.92	0.92	0.92	0.92	0.92	0.92	0.92	0.92	0.92
Percent Heavy Veh, %	2	2	2	2	2	2	2	2	2	2	2	2
Cap, veh/h	274	169	169	215	367	312	186	2493	873	308	2472	867
Arrive On Green	0.06	0.20	0.20	0.06	0.20	0.20	0.06	0.49	0.49	0.05	0.49	0.49
Sat Flow, veh/h	1774	856	856	1774	1863	1583	1774	5085	1583	1774	5085	1583
Grp Volume(v), veh/h	170	0	302	147	225	164	134	1252	48	105	2289	293
Grp Sat Flow(s),veh/h/ln	1774	0	1712	1774	1863	1583	1774	1695	1583	1774	1695	1583
Q Serve(g_s), s	5.5	0.0	15.5	5.5	9.9	8.3	3.4	15.0	1.3	2.6	37.9	9.3
Cycle Q Clear(g_c), s	5.5	0.0	15.5	5.5	9.9	8.3	3.4	15.0	1.3	2.6	37.9	9.3
Prop In Lane	1.00		0.50	1.00		1.00	1.00		1.00	1.00		1.00
Lane Grp Cap(c), veh/h	274	0	338	215	367	312	186	2493	873	308	2472	867
V/C Ratio(X)	0.62	0.00	0.89	0.68	0.61	0.53	0.72	0.50	0.05	0.34	0.93	0.34
Avail Cap(c_a), veh/h	274	0	344	215	375	318	186	2493	873	357	2472	867
HCM Platoon Ratio	1.00	1.00	1.00	1.00	1.00	1.00	1.00	1.00	1.00	1.00	1.00	1.00
Upstream Filter(I)	0.68	0.00	0.68	0.93	0.93	0.93	1.00	1.00	1.00	0.29	0.29	0.29
Uniform Delay (d), s/veh	30.1	0.0	35.2	29.7	33.0	32.4	20.7	15.5	9.3	11.8	21.6	11.3
Incr Delay (d2), s/veh	2.9	0.0	18.0	8.0	2.7	1.4	12.5	0.7	0.1	0.2	2.5	0.3
Initial Q Delay(d3),s/veh	0.0	0.0	0.0	0.0	0.0	0.0	0.0	0.0	0.0	0.0	0.0	0.0
%ile BackOfQ(95%),veh/ln	2.8	0.0	13.0	2.5	9.1	6.8	4.1	11.5	1.0	2.3	21.9	5.9
LnGrp Delay(d),s/veh	33.0	0.0	53.3	37.6	35.7	33.8	33.2	16.2	9.5	12.0	24.1	11.6
LnGrp LOS	C		D	D	D	C	C	B	A	B	C	B
Approach Vol, veh/h		472			536			1434			2687	
Approach Delay, s/veh		46.0			35.6			17.6			22.2	
Approach LOS		D			D			B			C	

Timer	1	2	3	4	5	6	7	8
Assigned Phs	1	2	3	4	5	6	7	8
Phs Duration (G+Y+Rc), s	9.1	48.6	10.0	22.2	9.5	48.3	10.0	22.2
Change Period (Y+Rc), s	4.5	4.5	4.5	4.5	4.5	4.5	4.5	4.5
Max Green Setting (Gmax), s	7.1	41.3	5.5	18.1	5.0	43.4	5.5	18.1
Max Q Clear Time (g_c+I1), s	4.6	17.0	7.5	17.5	5.4	39.9	7.5	11.9
Green Ext Time (p_c), s	0.0	22.9	0.0	0.3	0.0	3.5	0.0	2.0

Intersection Summary	
HCM 2010 Ctrl Delay	24.5
HCM 2010 LOS	C

Movement	EBL	EBR	NBL	NBT	SBT	SBR
Lane Configurations						
Traffic Volume (vph)	331	15	15	1009	204	63
Future Volume (vph)	331	15	15	1009	204	63
Ideal Flow (vphpl)	1900	1900	1900	1900	1900	1900
Total Lost time (s)	4.5	4.5	4.5	4.5	4.5	
Lane Util. Factor	1.00	1.00	1.00	1.00	1.00	
Frt	1.00	0.85	1.00	1.00	0.97	
Flt Protected	0.95	1.00	0.95	1.00	1.00	
Satd. Flow (prot)	1770	1583	1770	1863	1804	
Flt Permitted	0.95	1.00	0.52	1.00	1.00	
Satd. Flow (perm)	1770	1583	962	1863	1804	
Peak-hour factor, PHF	0.92	0.92	0.92	0.92	0.92	0.92
Adj. Flow (vph)	360	16	16	1097	222	68
RTOR Reduction (vph)	0	12	0	0	11	0
Lane Group Flow (vph)	360	4	16	1097	279	0
Turn Type	Perm	Perm	pm+pt	NA	NA	
Protected Phases			5	2	6	
Permitted Phases	4	4	2			
Actuated Green, G (s)	20.6	20.6	60.4	60.4	54.9	
Effective Green, g (s)	20.6	20.6	60.4	60.4	54.9	
Actuated g/C Ratio	0.23	0.23	0.67	0.67	0.61	
Clearance Time (s)	4.5	4.5	4.5	4.5	4.5	
Vehicle Extension (s)	3.0	3.0	3.0	3.0	3.0	
Lane Grp Cap (vph)	405	362	654	1250	1100	
v/s Ratio Prot			0.00	c0.59	0.15	
v/s Ratio Perm	c0.20	0.00	0.02			
v/c Ratio	0.89	0.01	0.02	0.88	0.25	
Uniform Delay, d1	33.6	26.8	5.2	11.8	8.1	
Progression Factor	1.00	1.00	1.00	1.00	1.00	
Incremental Delay, d2	20.4	0.0	0.0	8.9	0.6	
Delay (s)	54.0	26.8	5.2	20.7	8.7	
Level of Service	D	C	A	C	A	
Approach Delay (s)	52.8			20.5	8.7	
Approach LOS	D			C	A	

Intersection Summary			
HCM 2000 Control Delay	25.4	HCM 2000 Level of Service	C
HCM 2000 Volume to Capacity ratio	0.93		
Actuated Cycle Length (s)	90.0	Sum of lost time (s)	13.5
Intersection Capacity Utilization	78.9%	ICU Level of Service	D
Analysis Period (min)	15		

c Critical Lane Group

Movement	EBL	EBR	NBL	NBT	SBT	SBR
Lane Configurations						
Traffic Volume (vph)	68	22	42	433	1057	330
Future Volume (vph)	68	22	42	433	1057	330
Ideal Flow (vphpl)	1900	1900	1900	1900	1900	1900
Total Lost time (s)	4.5	4.5	4.5	4.5	4.5	
Lane Util. Factor	1.00	1.00	1.00	1.00	1.00	
Frt	1.00	0.85	1.00	1.00	0.97	
Flt Protected	0.95	1.00	0.95	1.00	1.00	
Satd. Flow (prot)	1770	1583	1770	1863	1803	
Flt Permitted	0.95	1.00	0.03	1.00	1.00	
Satd. Flow (perm)	1770	1583	60	1863	1803	
Peak-hour factor, PHF	0.92	0.92	0.92	0.92	0.92	0.92
Adj. Flow (vph)	74	24	46	471	1149	359
RTOR Reduction (vph)	0	22	0	0	6	0
Lane Group Flow (vph)	74	2	46	471	1502	0
Turn Type	Perm	Perm	pm+pt	NA	NA	
Protected Phases			5	2	6	
Permitted Phases	4	4	2			
Actuated Green, G (s)	11.6	11.6	129.4	129.4	119.8	
Effective Green, g (s)	11.6	11.6	129.4	129.4	119.8	
Actuated g/C Ratio	0.08	0.08	0.86	0.86	0.80	
Clearance Time (s)	4.5	4.5	4.5	4.5	4.5	
Vehicle Extension (s)	3.0	3.0	3.0	3.0	3.0	
Lane Grp Cap (vph)	136	122	109	1607	1439	
v/s Ratio Prot			c0.01	0.25	c0.83	
v/s Ratio Perm	c0.04	0.00	0.35			
v/c Ratio	0.54	0.02	0.42	0.29	1.04	
Uniform Delay, d1	66.7	63.9	50.9	1.9	15.1	
Progression Factor	1.00	1.00	1.00	1.00	1.00	
Incremental Delay, d2	4.4	0.1	2.6	0.5	36.0	
Delay (s)	71.0	64.0	53.5	2.4	51.1	
Level of Service	E	E	D	A	D	
Approach Delay (s)	69.3			6.9	51.1	
Approach LOS	E			A	D	

Intersection Summary			
HCM 2000 Control Delay	41.2	HCM 2000 Level of Service	D
HCM 2000 Volume to Capacity ratio	0.98		
Actuated Cycle Length (s)	150.0	Sum of lost time (s)	13.5
Intersection Capacity Utilization	87.4%	ICU Level of Service	E
Analysis Period (min)	15		

c Critical Lane Group

Movement	EBL	EBT	EBR	WBL	WBT	WBR	NBL	NBT	NBR	SBL	SBT	SBR
Lane Configurations												
Traffic Volume (veh/h)	0	0	0	851	0	96	73	654	0	0	1206	15
Future Volume (veh/h)	0	0	0	851	0	96	73	654	0	0	1206	15
Number				3	8	18	5	2	12	1	6	16
Initial Q (Qb), veh				0	0	0	0	0	0	0	0	0
Ped-Bike Adj(A_pbT)				1.00		1.00	1.00		1.00	1.00		1.00
Parking Bus, Adj				1.00	1.00	1.00	1.00	1.00	1.00	1.00	1.00	1.00
Adj Sat Flow, veh/h/ln				1863	1863	1900	1863	1863	0	0	1863	1900
Adj Flow Rate, veh/h				925	0	104	79	711	0	0	1311	16
Adj No. of Lanes				2	1	0	1	2	0	0	2	0
Peak Hour Factor				0.92	0.92	0.92	0.92	0.92	0.92	0.92	0.92	0.92
Percent Heavy Veh, %				2	2	2	2	2	0	0	2	2
Cap, veh/h				1051	0	484	259	1979	0	0	1583	19
Arrive On Green				0.31	0.00	0.31	0.05	0.56	0.00	0.00	0.44	0.44
Sat Flow, veh/h				3442	0	1583	1774	3632	0	0	3674	44
Grp Volume(v), veh/h				925	0	104	79	711	0	0	648	679
Grp Sat Flow(s),veh/h/ln				1721	0	1583	1774	1770	0	0	1770	1855
Q Serve(g_s), s				15.1	0.0	2.9	1.3	6.5	0.0	0.0	19.0	19.0
Cycle Q Clear(g_c), s				15.1	0.0	2.9	1.3	6.5	0.0	0.0	19.0	19.0
Prop In Lane				1.00		1.00	1.00		0.00	0.00		0.02
Lane Grp Cap(c), veh/h				1051	0	484	259	1979	0	0	782	820
V/C Ratio(X)				0.88	0.00	0.22	0.31	0.36	0.00	0.00	0.83	0.83
Avail Cap(c_a), veh/h				1108	0	510	382	1979	0	0	782	820
HCM Platoon Ratio				1.00	1.00	1.00	1.00	1.00	1.00	1.00	1.00	1.00
Upstream Filter(I)				1.00	0.00	1.00	1.00	1.00	0.00	0.00	1.00	1.00
Uniform Delay (d), s/veh				19.5	0.0	15.2	11.6	7.2	0.0	0.0	14.5	14.5
Incr Delay (d2), s/veh				8.1	0.0	0.2	0.7	0.5	0.0	0.0	9.8	9.4
Initial Q Delay(d3),s/veh				0.0	0.0	0.0	0.0	0.0	0.0	0.0	0.0	0.0
%ile BackOfQ(95%),veh/ln				13.0	0.0	2.3	1.2	5.9	0.0	0.0	16.8	17.4
LnGrp Delay(d),s/veh				27.6	0.0	15.5	12.3	7.7	0.0	0.0	24.3	23.9
LnGrp LOS				C		B	B	A			C	C
Approach Vol, veh/h					1029			790			1327	
Approach Delay, s/veh					26.3			8.1			24.1	
Approach LOS					C			A			C	

Timer	1	2	3	4	5	6	7	8
Assigned Phs		2			5	6		8
Phs Duration (G+Y+Rc), s		37.0			6.9	30.1		22.0
Change Period (Y+Rc), s		4.0			4.0	4.0		4.0
Max Green Setting (Gmax), s		33.0			7.0	22.0		19.0
Max Q Clear Time (g_c+I1), s		8.5			3.3	21.0		17.1
Green Ext Time (p_c), s		16.1			0.0	0.9		1.0

Intersection Summary	
HCM 2010 Ctrl Delay	20.8
HCM 2010 LOS	C

Movement	EBL	EBT	EBR	WBL	WBT	WBR	NBL	NBT	NBR	SBL	SBT	SBR
Lane Configurations												
Traffic Volume (veh/h)	0	0	0	719	0	201	201	1279	0	0	1066	47
Future Volume (veh/h)	0	0	0	719	0	201	201	1279	0	0	1066	47
Number				3	8	18	5	2	12	1	6	16
Initial Q (Qb), veh				0	0	0	0	0	0	0	0	0
Ped-Bike Adj(A_pbT)				1.00		1.00	1.00		1.00	1.00		1.00
Parking Bus, Adj				1.00	1.00	1.00	1.00	1.00	1.00	1.00	1.00	1.00
Adj Sat Flow, veh/h/ln				1863	1863	1900	1863	1863	0	0	1863	1900
Adj Flow Rate, veh/h				782	0	218	218	1390	0	0	1159	51
Adj No. of Lanes				2	1	0	1	2	0	0	2	0
Peak Hour Factor				0.92	0.92	0.92	0.92	0.92	0.92	0.92	0.92	0.92
Percent Heavy Veh, %				2	2	2	2	2	0	0	2	2
Cap, veh/h				975	0	449	371	2065	0	0	1381	61
Arrive On Green				0.28	0.00	0.28	0.12	0.58	0.00	0.00	0.40	0.40
Sat Flow, veh/h				3442	0	1583	1774	3632	0	0	3547	152
Grp Volume(v), veh/h				782	0	218	218	1390	0	0	594	616
Grp Sat Flow(s),veh/h/ln				1721	0	1583	1774	1770	0	0	1770	1836
Q Serve(g_s), s				12.6	0.0	6.9	3.8	16.2	0.0	0.0	18.2	18.2
Cycle Q Clear(g_c), s				12.6	0.0	6.9	3.8	16.2	0.0	0.0	18.2	18.2
Prop In Lane				1.00		1.00	1.00		0.00	0.00		0.08
Lane Grp Cap(c), veh/h				975	0	449	371	2065	0	0	708	734
V/C Ratio(X)				0.80	0.00	0.49	0.59	0.67	0.00	0.00	0.84	0.84
Avail Cap(c_a), veh/h				975	0	449	371	2065	0	0	708	734
HCM Platoon Ratio				1.00	1.00	1.00	1.00	1.00	1.00	1.00	1.00	1.00
Upstream Filter(I)				1.00	0.00	1.00	1.00	1.00	0.00	0.00	1.00	1.00
Uniform Delay (d), s/veh				19.9	0.0	17.9	12.0	8.6	0.0	0.0	16.3	16.3
Incr Delay (d2), s/veh				6.9	0.0	3.7	6.6	1.8	0.0	0.0	11.4	11.1
Initial Q Delay(d3),s/veh				0.0	0.0	0.0	0.0	0.0	0.0	0.0	0.0	0.0
%ile BackOfQ(95%),veh/ln				11.2	0.0	6.2	4.4	12.9	0.0	0.0	16.4	16.9
LnGrp Delay(d),s/veh				26.9	0.0	21.6	18.6	10.4	0.0	0.0	27.7	27.4
LnGrp LOS				C		C	B	B			C	C
Approach Vol, veh/h					1000			1608			1210	
Approach Delay, s/veh					25.7			11.5			27.5	
Approach LOS					C			B			C	

Timer	1	2	3	4	5	6	7	8
Assigned Phs		2			5	6		8
Phs Duration (G+Y+Rc), s		39.0			11.0	28.0		21.0
Change Period (Y+Rc), s		4.0			4.0	4.0		4.0
Max Green Setting (Gmax), s		35.0			7.0	24.0		17.0
Max Q Clear Time (g_c+I1), s		18.2			5.8	20.2		14.6
Green Ext Time (p_c), s		14.5			0.1	3.6		1.2

Intersection Summary	
HCM 2010 Ctrl Delay	20.3
HCM 2010 LOS	C

Movement	EBL	EBT	EBR	WBL	WBT	WBR	NBL	NBT	NBR	SBL	SBT	SBR
Lane Configurations												
Traffic Volume (vph)	38	0	262	0	0	0	0	703	656	292	1821	0
Future Volume (vph)	38	0	262	0	0	0	0	703	656	292	1821	0
Ideal Flow (vphpl)	1900	1900	1900	1900	1900	1900	1900	1900	1900	1900	1900	1900
Total Lost time (s)		4.0	4.0					4.0	4.0	4.0	4.0	
Lane Util. Factor		1.00	1.00					0.91	0.91	1.00	0.95	
Frt		1.00	0.85					0.96	0.85	1.00	1.00	
Flt Protected		0.95	1.00					1.00	1.00	0.95	1.00	
Satd. Flow (prot)		1770	1583					3262	1441	1770	3539	
Flt Permitted		0.95	1.00					1.00	1.00	0.15	1.00	
Satd. Flow (perm)		1770	1583					3262	1441	280	3539	
Peak-hour factor, PHF	0.92	0.92	0.92	0.92	0.92	0.92	0.92	0.92	0.92	0.92	0.92	0.92
Adj. Flow (vph)	41	0	285	0	0	0	0	764	713	317	1979	0
RTOR Reduction (vph)	0	0	72	0	0	0	0	47	272	0	0	0
Lane Group Flow (vph)	0	41	213	0	0	0	0	974	184	317	1979	0
Turn Type	Perm	NA	Perm					NA	Perm	pm+pt	NA	
Protected Phases		4						2		1	6	
Permitted Phases	4		4						2	6		
Actuated Green, G (s)		11.8	11.8					22.6	22.6	36.2	36.2	
Effective Green, g (s)		11.8	11.8					22.6	22.6	36.2	36.2	
Actuated g/C Ratio		0.21	0.21					0.40	0.40	0.65	0.65	
Clearance Time (s)		4.0	4.0					4.0	4.0	4.0	4.0	
Vehicle Extension (s)		3.0	3.0					3.0	3.0	3.0	3.0	
Lane Grp Cap (vph)		372	333					1316	581	436	2287	
v/s Ratio Prot								0.30		0.12	c0.56	
v/s Ratio Perm		0.02	c0.13						0.13	0.34		
v/c Ratio		0.11	0.64					0.74	0.32	0.73	0.87	
Uniform Delay, d1		17.9	20.2					14.2	11.4	9.5	7.9	
Progression Factor		1.00	1.00					1.00	1.00	1.00	1.00	
Incremental Delay, d2		0.1	4.2					3.8	1.4	6.0	4.7	
Delay (s)		18.0	24.3					18.0	12.8	15.5	12.6	
Level of Service		B	C					B	B	B	B	
Approach Delay (s)		23.5			0.0			16.4			13.0	
Approach LOS		C			A			B			B	

Intersection Summary			
HCM 2000 Control Delay	15.1	HCM 2000 Level of Service	B
HCM 2000 Volume to Capacity ratio	0.88		
Actuated Cycle Length (s)	56.0	Sum of lost time (s)	12.0
Intersection Capacity Utilization	105.9%	ICU Level of Service	G
Analysis Period (min)	15		

c Critical Lane Group

Movement	EBL	EBT	EBR	WBL	WBT	WBR	NBL	NBT	NBR	SBL	SBT	SBR
Lane Configurations												
Traffic Volume (vph)	21	0	85	0	0	0	0	1532	808	225	1622	0
Future Volume (vph)	21	0	85	0	0	0	0	1532	808	225	1622	0
Ideal Flow (vphpl)	1900	1900	1900	1900	1900	1900	1900	1900	1900	1900	1900	1900
Total Lost time (s)		4.0	4.0					4.0	4.0	4.0	4.0	
Lane Util. Factor		1.00	1.00					0.91	0.91	1.00	0.95	
Frt		1.00	0.85					0.99	0.85	1.00	1.00	
Flt Protected		0.95	1.00					1.00	1.00	0.95	1.00	
Satd. Flow (prot)		1770	1583					3358	1441	1770	3539	
Flt Permitted		0.95	1.00					1.00	1.00	0.08	1.00	
Satd. Flow (perm)		1770	1583					3358	1441	148	3539	
Peak-hour factor, PHF	0.92	0.92	0.92	0.92	0.92	0.92	0.92	0.92	0.92	0.92	0.92	0.92
Adj. Flow (vph)	23	0	92	0	0	0	0	1665	878	245	1763	0
RTOR Reduction (vph)	0	0	62	0	0	0	0	5	276	0	0	0
Lane Group Flow (vph)	0	23	30	0	0	0	0	1774	488	245	1763	0
Turn Type	Perm	NA	Perm					NA	Perm	pm+pt	NA	
Protected Phases		4						2		1	6	
Permitted Phases	4		4						2	6		
Actuated Green, G (s)		6.1	6.1					46.2	46.2	58.2	58.2	
Effective Green, g (s)		6.1	6.1					46.2	46.2	58.2	58.2	
Actuated g/C Ratio		0.08	0.08					0.64	0.64	0.80	0.80	
Clearance Time (s)		4.0	4.0					4.0	4.0	4.0	4.0	
Vehicle Extension (s)		3.0	3.0					3.0	3.0	3.0	3.0	
Lane Grp Cap (vph)		149	133					2145	920	298	2848	
v/s Ratio Prot								0.53		c0.09	0.50	
v/s Ratio Perm		0.01	c0.02						0.34	c0.57		
v/c Ratio		0.15	0.22					0.83	0.53	0.82	0.62	
Uniform Delay, d1		30.7	30.9					10.0	7.1	19.9	2.7	
Progression Factor		1.00	1.00					1.00	1.00	1.00	1.00	
Incremental Delay, d2		0.5	0.9					3.8	2.2	16.5	1.0	
Delay (s)		31.2	31.7					13.8	9.3	36.4	3.8	
Level of Service		C	C					B	A	D	A	
Approach Delay (s)		31.6			0.0			12.5			7.7	
Approach LOS		C			A			B			A	

Intersection Summary			
HCM 2000 Control Delay	10.9	HCM 2000 Level of Service	B
HCM 2000 Volume to Capacity ratio	0.80		
Actuated Cycle Length (s)	72.3	Sum of lost time (s)	12.0
Intersection Capacity Utilization	76.7%	ICU Level of Service	D
Analysis Period (min)	15		

c Critical Lane Group

Movement	EBL	EBT	EBR	WBL	WBT	WBR	NBL	NBT	NBR	SBL	SBT	SBR
Lane Configurations												
Traffic Volume (veh/h)	4	60	15	917	636	265	75	1098	467	276	1803	44
Future Volume (veh/h)	4	60	15	917	636	265	75	1098	467	276	1803	44
Number	7	4	14	3	8	18	5	2	12	1	6	16
Initial Q (Qb), veh	0	0	0	0	0	0	0	0	0	0	0	0
Ped-Bike Adj(A_pbT)	1.00		1.00	1.00		1.00	1.00		1.00	1.00		1.00
Parking Bus, Adj	1.00	1.00	1.00	1.00	1.00	1.00	1.00	1.00	1.00	1.00	1.00	1.00
Adj Sat Flow, veh/h/ln	1863	1863	1863	1863	1863	1863	1863	1863	1863	1863	1863	1863
Adj Flow Rate, veh/h	4	65	16	997	691	288	82	1193	508	300	1960	48
Adj No. of Lanes	1	2	1	3	2	1	1	3	2	2	3	1
Peak Hour Factor	0.92	0.92	0.92	0.92	0.92	0.92	0.92	0.92	0.92	0.92	0.92	0.92
Percent Heavy Veh, %	2	2	2	2	2	2	2	2	2	2	2	2
Cap, veh/h	138	376	168	1352	892	515	205	2392	1729	604	2552	795
Arrive On Green	0.00	0.11	0.11	0.15	0.25	0.25	0.04	0.47	0.47	0.07	0.50	0.50
Sat Flow, veh/h	1774	3539	1583	5003	3539	1583	1774	5085	2787	3442	5085	1583
Grp Volume(v), veh/h	4	65	16	997	691	288	82	1193	508	300	1960	48
Grp Sat Flow(s),veh/h/ln	1774	1770	1583	1668	1770	1583	1774	1695	1393	1721	1695	1583
Q Serve(g_s), s	0.2	1.3	0.7	12.0	14.5	12.0	1.9	13.0	6.8	3.4	25.0	1.2
Cycle Q Clear(g_c), s	0.2	1.3	0.7	12.0	14.5	12.0	1.9	13.0	6.8	3.4	25.0	1.2
Prop In Lane	1.00		1.00	1.00		1.00	1.00		1.00	1.00		1.00
Lane Grp Cap(c), veh/h	138	376	168	1352	892	515	205	2392	1729	604	2552	795
V/C Ratio(X)	0.03	0.17	0.10	0.74	0.78	0.56	0.40	0.50	0.29	0.50	0.77	0.06
Avail Cap(c_a), veh/h	219	708	317	1352	1062	591	219	2392	1729	782	2671	832
HCM Platoon Ratio	1.00	1.00	1.00	1.00	1.00	1.00	1.00	1.00	1.00	1.00	1.00	1.00
Upstream Filter(I)	1.00	1.00	1.00	1.00	1.00	1.00	1.00	1.00	1.00	1.00	1.00	1.00
Uniform Delay (d), s/veh	31.8	32.5	32.3	26.5	27.8	22.2	15.1	14.7	7.0	11.3	16.1	10.2
Incr Delay (d2), s/veh	0.1	0.2	0.2	2.2	3.1	1.0	1.3	0.7	0.4	0.6	1.3	0.0
Initial Q Delay(d3),s/veh	0.0	0.0	0.0	0.0	0.0	0.0	0.0	0.0	0.0	0.0	0.0	0.0
%ile BackOfQ(95%),veh/ln	0.1	1.2	0.6	3.2	12.0	9.1	1.8	10.3	4.8	2.9	17.6	1.0
LnGrp Delay(d),s/veh	31.9	32.8	32.5	28.7	30.9	23.2	16.4	15.4	7.5	12.0	17.5	10.3
LnGrp LOS	C	C	C	C	C	C	B	B	A	B	B	B
Approach Vol, veh/h		85			1976			1783			2308	
Approach Delay, s/veh		32.7			28.6			13.2			16.6	
Approach LOS		C			C			B			B	

Timer	1	2	3	4	5	6	7	8
Assigned Phs	1	2	3	4	5	6	7	8
Phs Duration (G+Y+Rc), s	9.9	41.6	16.0	12.5	7.4	44.1	4.3	24.1
Change Period (Y+Rc), s	4.0	4.0	4.0	4.0	4.0	4.0	4.0	4.0
Max Green Setting (Gmax), s	10.0	36.0	12.0	16.0	4.0	42.0	4.0	24.0
Max Q Clear Time (g_c+I1), s	5.4	15.0	14.0	3.3	3.9	27.0	2.2	16.5
Green Ext Time (p_c), s	0.4	19.9	0.0	5.1	0.0	13.1	0.0	3.6

Intersection Summary	
HCM 2010 Ctrl Delay	19.7
HCM 2010 LOS	B

Movement	EBL	EBT	EBR	WBL	WBT	WBR	NBL	NBT	NBR	SBL	SBT	SBR
Lane Configurations												
Traffic Volume (veh/h)	165	317	302	755	194	414	89	1768	992	417	1351	37
Future Volume (veh/h)	165	317	302	755	194	414	89	1768	992	417	1351	37
Number	7	4	14	3	8	18	5	2	12	1	6	16
Initial Q (Qb), veh	0	0	0	0	0	0	0	0	0	0	0	0
Ped-Bike Adj(A_pbT)	1.00		1.00	1.00		1.00	1.00		1.00	1.00		1.00
Parking Bus, Adj	1.00	1.00	1.00	1.00	1.00	1.00	1.00	1.00	1.00	1.00	1.00	1.00
Adj Sat Flow, veh/h/ln	1863	1863	1863	1863	1863	1863	1863	1863	1863	1863	1863	1863
Adj Flow Rate, veh/h	179	345	328	821	211	450	97	1922	1078	453	1468	40
Adj No. of Lanes	1	2	1	3	2	1	1	3	2	2	3	1
Peak Hour Factor	0.92	0.92	0.92	0.92	0.92	0.92	0.92	0.92	0.92	0.92	0.92	0.92
Percent Heavy Veh, %	2	2	2	2	2	2	2	2	2	2	2	2
Cap, veh/h	211	515	340	864	706	532	123	2034	1596	469	2375	927
Arrive On Green	0.12	0.15	0.15	0.17	0.20	0.20	0.07	0.40	0.40	0.14	0.47	0.47
Sat Flow, veh/h	1774	3539	1583	5003	3539	1583	1774	5085	2787	3442	5085	1583
Grp Volume(v), veh/h	179	345	328	821	211	450	97	1922	1078	453	1468	40
Grp Sat Flow(s),veh/h/ln	1774	1770	1583	1668	1770	1583	1774	1695	1393	1721	1695	1583
Q Serve(g_s), s	10.9	10.2	16.0	17.9	5.6	21.9	5.9	40.1	29.7	14.4	23.8	1.2
Cycle Q Clear(g_c), s	10.9	10.2	16.0	17.9	5.6	21.9	5.9	40.1	29.7	14.4	23.8	1.2
Prop In Lane	1.00		1.00	1.00		1.00	1.00		1.00	1.00		1.00
Lane Grp Cap(c), veh/h	211	515	340	864	706	532	123	2034	1596	469	2375	927
V/C Ratio(X)	0.85	0.67	0.96	0.95	0.30	0.85	0.79	0.94	0.68	0.97	0.62	0.04
Avail Cap(c_a), veh/h	306	515	340	864	706	532	258	2034	1596	469	2375	927
HCM Platoon Ratio	1.00	1.00	1.00	1.00	1.00	1.00	1.00	1.00	1.00	1.00	1.00	1.00
Upstream Filter(I)	1.00	1.00	1.00	1.00	1.00	1.00	1.00	1.00	1.00	1.00	1.00	1.00
Uniform Delay (d), s/veh	47.5	44.5	42.8	45.0	37.5	33.9	50.4	31.8	16.4	47.2	22.0	9.7
Incr Delay (d2), s/veh	14.0	3.4	39.3	19.5	0.2	12.0	10.6	10.6	2.3	32.6	0.5	0.0
Initial Q Delay(d3),s/veh	0.0	0.0	0.0	0.0	0.0	0.0	0.0	0.0	0.0	0.0	0.0	0.0
%ile BackOfQ(95%),veh/ln	10.2	9.0	19.6	14.9	4.9	20.6	5.9	28.1	17.5	13.9	16.8	0.9
LnGrp Delay(d),s/veh	61.5	47.9	82.1	64.6	37.7	45.9	61.0	42.5	18.7	79.9	22.5	9.7
LnGrp LOS	E	D	F	E	D	D	E	D	B	E	C	A
Approach Vol, veh/h		852			1482			3097			1961	
Approach Delay, s/veh		63.9			55.1			34.8			35.5	
Approach LOS		E			E			C			D	

Timer	1	2	3	4	5	6	7	8
Assigned Phs	1	2	3	4	5	6	7	8
Phs Duration (G+Y+Rc), s	19.0	48.0	23.0	20.0	11.6	55.4	17.1	25.9
Change Period (Y+Rc), s	4.0	4.0	4.0	4.0	4.0	4.0	4.0	4.0
Max Green Setting (Gmax), s	15.0	44.0	19.0	16.0	16.0	43.0	19.0	16.0
Max Q Clear Time (g_c+I1), s	16.4	42.1	19.9	18.0	7.9	25.8	12.9	23.9
Green Ext Time (p_c), s	0.0	1.9	0.0	0.0	0.1	16.9	0.2	0.0

Intersection Summary	
HCM 2010 Ctrl Delay	42.4
HCM 2010 LOS	D

Movement	EBL	EBT	EBR	WBL	WBT	WBR	NBL	NBT	NBR	SBL	SBT	SBR
Lane Configurations												
Traffic Volume (veh/h)	0	0	0	1010	0	13	37	45	0	0	687	8
Future Volume (veh/h)	0	0	0	1010	0	13	37	45	0	0	687	8
Number				3	8	18	5	2	12	1	6	16
Initial Q (Qb), veh				0	0	0	0	0	0	0	0	0
Ped-Bike Adj(A_pbT)				1.00		1.00	1.00		1.00	1.00		1.00
Parking Bus, Adj				1.00	1.00	1.00	1.00	1.00	1.00	1.00	1.00	1.00
Adj Sat Flow, veh/h/ln				1863	1863	1900	1863	1863	0	0	1863	1863
Adj Flow Rate, veh/h				1098	0	14	40	49	0	0	747	9
Adj No. of Lanes				2	1	0	1	1	0	0	1	1
Peak Hour Factor				0.92	0.92	0.92	0.92	0.92	0.92	0.92	0.92	0.92
Percent Heavy Veh, %				2	2	2	2	2	0	0	2	2
Cap, veh/h				1179	0	542	227	1025	0	0	868	738
Arrive On Green				0.34	0.00	0.34	0.03	0.55	0.00	0.00	0.47	0.47
Sat Flow, veh/h				3442	0	1583	1774	1863	0	0	1863	1583
Grp Volume(v), veh/h				1098	0	14	40	49	0	0	747	9
Grp Sat Flow(s),veh/h/ln				1721	0	1583	1774	1863	0	0	1863	1583
Q Serve(g_s), s				23.0	0.0	0.4	0.8	0.9	0.0	0.0	26.6	0.2
Cycle Q Clear(g_c), s				23.0	0.0	0.4	0.8	0.9	0.0	0.0	26.6	0.2
Prop In Lane				1.00		1.00	1.00		0.00	0.00		1.00
Lane Grp Cap(c), veh/h				1179	0	542	227	1025	0	0	868	738
V/C Ratio(X)				0.93	0.00	0.03	0.18	0.05	0.00	0.00	0.86	0.01
Avail Cap(c_a), veh/h				1201	0	552	269	1025	0	0	868	738
HCM Platoon Ratio				1.00	1.00	1.00	1.00	1.00	1.00	1.00	1.00	1.00
Upstream Filter(I)				1.00	0.00	1.00	1.00	1.00	0.00	0.00	1.00	1.00
Uniform Delay (d), s/veh				23.7	0.0	16.3	14.5	7.7	0.0	0.0	17.7	10.7
Incr Delay (d2), s/veh				12.7	0.0	0.0	0.4	0.1	0.0	0.0	10.9	0.0
Initial Q Delay(d3),s/veh				0.0	0.0	0.0	0.0	0.0	0.0	0.0	0.0	0.0
%ile BackOfQ(95%),veh/ln				18.8	0.0	0.3	0.8	0.9	0.0	0.0	22.7	0.2
LnGrp Delay(d),s/veh				36.4	0.0	16.3	14.9	7.8	0.0	0.0	28.6	10.7
LnGrp LOS				D		B	B	A			C	B
Approach Vol, veh/h					1112			89			756	
Approach Delay, s/veh					36.1			11.0			28.4	
Approach LOS					D			B			C	

Timer	1	2	3	4	5	6	7	8
Assigned Phs		2			5	6		8
Phs Duration (G+Y+Rc), s		45.0			6.3	38.7		29.5
Change Period (Y+Rc), s		4.0			4.0	4.0		4.0
Max Green Setting (Gmax), s		41.0			4.0	33.0		26.0
Max Q Clear Time (g_c+I1), s		2.9			2.8	28.6		25.0
Green Ext Time (p_c), s		6.8			0.0	2.1		0.6

Intersection Summary	
HCM 2010 Ctrl Delay	32.0
HCM 2010 LOS	C

Movement	EBL	EBT	EBR	WBL	WBT	WBR	NBL	NBT	NBR	SBL	SBT	SBR
Lane Configurations												
Traffic Volume (veh/h)	0	0	0	678	0	149	412	658	0	0	224	31
Future Volume (veh/h)	0	0	0	678	0	149	412	658	0	0	224	31
Number				3	8	18	5	2	12	1	6	16
Initial Q (Qb), veh				0	0	0	0	0	0	0	0	0
Ped-Bike Adj(A_pbT)				1.00		1.00	1.00		1.00	1.00		1.00
Parking Bus, Adj				1.00	1.00	1.00	1.00	1.00	1.00	1.00	1.00	1.00
Adj Sat Flow, veh/h/ln				1863	1863	1900	1863	1863	0	0	1863	1863
Adj Flow Rate, veh/h				737	0	162	448	715	0	0	243	34
Adj No. of Lanes				2	1	0	1	1	0	0	1	1
Peak Hour Factor				0.92	0.92	0.92	0.92	0.92	0.92	0.92	0.92	0.92
Percent Heavy Veh, %				2	2	2	2	2	0	0	2	2
Cap, veh/h				893	0	411	730	1123	0	0	642	546
Arrive On Green				0.26	0.00	0.26	0.19	0.60	0.00	0.00	0.34	0.34
Sat Flow, veh/h				3442	0	1583	1774	1863	0	0	1863	1583
Grp Volume(v), veh/h				737	0	162	448	715	0	0	243	34
Grp Sat Flow(s),veh/h/ln				1721	0	1583	1774	1863	0	0	1863	1583
Q Serve(g_s), s				11.7	0.0	4.9	8.5	14.4	0.0	0.0	5.7	0.8
Cycle Q Clear(g_c), s				11.7	0.0	4.9	8.5	14.4	0.0	0.0	5.7	0.8
Prop In Lane				1.00		1.00	1.00		0.00	0.00		1.00
Lane Grp Cap(c), veh/h				893	0	411	730	1123	0	0	642	546
V/C Ratio(X)				0.82	0.00	0.39	0.61	0.64	0.00	0.00	0.38	0.06
Avail Cap(c_a), veh/h				1007	0	463	822	1123	0	0	642	546
HCM Platoon Ratio				1.00	1.00	1.00	1.00	1.00	1.00	1.00	1.00	1.00
Upstream Filter(I)				1.00	0.00	1.00	1.00	1.00	0.00	0.00	1.00	1.00
Uniform Delay (d), s/veh				20.3	0.0	17.7	8.1	7.4	0.0	0.0	14.3	12.7
Incr Delay (d2), s/veh				5.2	0.0	0.6	1.1	2.8	0.0	0.0	1.7	0.2
Initial Q Delay(d3),s/veh				0.0	0.0	0.0	0.0	0.0	0.0	0.0	0.0	0.0
%ile BackOfQ(95%),veh/ln				10.2	0.0	3.9	7.6	12.7	0.0	0.0	5.8	0.7
LnGrp Delay(d),s/veh				25.4	0.0	18.3	9.2	10.2	0.0	0.0	16.0	13.0
LnGrp LOS				C		B	A	B			B	B
Approach Vol, veh/h					899			1163			277	
Approach Delay, s/veh					24.1			9.8			15.7	
Approach LOS					C			A			B	

Timer	1	2	3	4	5	6	7	8
Assigned Phs		2			5	6		8
Phs Duration (G+Y+Rc), s		39.0			15.0	24.0		19.1
Change Period (Y+Rc), s		4.0			4.0	4.0		4.0
Max Green Setting (Gmax), s		35.0			14.0	17.0		17.0
Max Q Clear Time (g_c+I1), s		16.4			10.5	7.7		13.7
Green Ext Time (p_c), s		5.8			0.5	4.0		1.4

Intersection Summary	
HCM 2010 Ctrl Delay	16.0
HCM 2010 LOS	B

Movement	EBL	EBT	EBR	WBL	WBT	WBR	NBL	NBT	NBR	SBL	SBT	SBR
Lane Configurations												
Traffic Volume (vph)	1	0	409	0	0	0	0	89	660	117	1588	0
Future Volume (vph)	1	0	409	0	0	0	0	89	660	117	1588	0
Ideal Flow (vphpl)	1900	1900	1900	1900	1900	1900	1900	1900	1900	1900	1900	1900
Total Lost time (s)	4.0	4.0						4.0	4.0	4.0	4.0	
Lane Util. Factor	1.00	1.00						0.91	0.91	1.00	0.95	
Frt	1.00	0.85						0.88	0.85	1.00	1.00	
Flt Protected	0.95	1.00						1.00	1.00	0.95	1.00	
Satd. Flow (prot)	1770	1583						2990	1441	1770	3539	
Flt Permitted	0.95	1.00						1.00	1.00	0.38	1.00	
Satd. Flow (perm)	1770	1583						2990	1441	710	3539	
Peak-hour factor, PHF	0.92	0.92	0.92	0.92	0.92	0.92	0.92	0.92	0.92	0.92	0.92	0.92
Adj. Flow (vph)	1	0	445	0	0	0	0	97	717	127	1726	0
RTOR Reduction (vph)	0	70	0	0	0	0	0	215	215	0	0	0
Lane Group Flow (vph)	1	375	0	0	0	0	0	241	143	127	1726	0
Turn Type	Perm	NA						NA	Perm	pm+pt	NA	
Protected Phases		4						2		1	6	
Permitted Phases	4								2	6		
Actuated Green, G (s)	16.0	16.0						22.0	22.0	31.0	31.0	
Effective Green, g (s)	16.0	16.0						22.0	22.0	31.0	31.0	
Actuated g/C Ratio	0.29	0.29						0.40	0.40	0.56	0.56	
Clearance Time (s)	4.0	4.0						4.0	4.0	4.0	4.0	
Lane Grp Cap (vph)	514	460						1196	576	496	1994	
v/s Ratio Prot		c0.24						0.08		0.02	c0.49	
v/s Ratio Perm	0.00								0.10	0.12		
v/c Ratio	0.00	0.81						0.20	0.25	0.26	0.87	
Uniform Delay, d1	13.8	18.1						10.8	11.0	5.9	10.2	
Progression Factor	1.00	1.00						1.00	1.00	1.00	1.00	
Incremental Delay, d2	0.0	14.6						0.4	1.0	1.2	5.3	
Delay (s)	13.8	32.8						11.1	12.0	7.2	15.6	
Level of Service	B	C						B	B	A	B	
Approach Delay (s)		32.7			0.0			11.5			15.0	
Approach LOS		C			A			B			B	

Intersection Summary			
HCM 2000 Control Delay	16.6	HCM 2000 Level of Service	B
HCM 2000 Volume to Capacity ratio	0.93		
Actuated Cycle Length (s)	55.0	Sum of lost time (s)	12.0
Intersection Capacity Utilization	78.3%	ICU Level of Service	D
Analysis Period (min)	15		
c Critical Lane Group			

Movement	EBL	EBT	EBR	WBL	WBT	WBR	NBL	NBT	NBR	SBL	SBT	SBR
Lane Configurations												
Traffic Volume (vph)	8	0	49	0	0	0	0	1120	951	111	821	0
Future Volume (vph)	8	0	49	0	0	0	0	1120	951	111	821	0
Ideal Flow (vphpl)	1900	1900	1900	1900	1900	1900	1900	1900	1900	1900	1900	1900
Total Lost time (s)	4.0	4.0						4.0	4.0	4.0	4.0	
Lane Util. Factor	1.00	1.00						0.91	0.91	1.00	0.95	
Frt	1.00	0.85						0.97	0.85	1.00	1.00	
Flt Protected	0.95	1.00						1.00	1.00	0.95	1.00	
Satd. Flow (prot)	1770	1583						3279	1441	1770	3539	
Flt Permitted	0.95	1.00						1.00	1.00	0.10	1.00	
Satd. Flow (perm)	1770	1583						3279	1441	190	3539	
Peak-hour factor, PHF	0.92	0.92	0.92	0.92	0.92	0.92	0.92	0.92	0.92	0.92	0.92	0.92
Adj. Flow (vph)	9	0	53	0	0	0	0	1217	1034	121	892	0
RTOR Reduction (vph)	0	49	0	0	0	0	0	26	242	0	0	0
Lane Group Flow (vph)	9	4	0	0	0	0	0	1532	451	121	892	0
Turn Type	Perm	NA						NA	Perm	pm+pt	NA	
Protected Phases		4						2		1	6	
Permitted Phases	4								2	6		
Actuated Green, G (s)	3.8	3.8						35.3	35.3	42.5	42.5	
Effective Green, g (s)	3.8	3.8						35.3	35.3	42.5	42.5	
Actuated g/C Ratio	0.07	0.07						0.65	0.65	0.78	0.78	
Clearance Time (s)	4.0	4.0						4.0	4.0	4.0	4.0	
Vehicle Extension (s)	3.0	3.0						3.0	3.0	3.0	3.0	
Lane Grp Cap (vph)	123	110						2131	936	241	2769	
v/s Ratio Prot		0.00						c0.47		c0.03	0.25	
v/s Ratio Perm	c0.01								0.31	0.36		
v/c Ratio	0.07	0.03						0.72	0.48	0.50	0.32	
Uniform Delay, d1	23.6	23.5						6.2	4.8	5.6	1.7	
Progression Factor	1.00	1.00						1.00	1.00	1.00	1.00	
Incremental Delay, d2	0.3	0.1						2.1	1.8	1.6	0.3	
Delay (s)	23.9	23.7						8.4	6.6	7.3	2.0	
Level of Service	C	C						A	A	A	A	
Approach Delay (s)		23.7			0.0			7.8			2.7	
Approach LOS		C			A			A			A	

Intersection Summary			
HCM 2000 Control Delay	6.5	HCM 2000 Level of Service	A
HCM 2000 Volume to Capacity ratio	0.65		
Actuated Cycle Length (s)	54.3	Sum of lost time (s)	12.0
Intersection Capacity Utilization	64.0%	ICU Level of Service	B
Analysis Period (min)	15		

c Critical Lane Group

Movement	EBL	EBT	EBR	WBL	WBT	WBR	NBL	NBT	NBR	SBL	SBT	SBR
Lane Configurations												
Traffic Volume (veh/h)	2	6	2	78	202	90	64	621	46	173	1650	243
Future Volume (veh/h)	2	6	2	78	202	90	64	621	46	173	1650	243
Number	7	4	14	3	8	18	5	2	12	1	6	16
Initial Q (Qb), veh	0	0	0	0	0	0	0	0	0	0	0	0
Ped-Bike Adj(A_pbT)	1.00		1.00	1.00		1.00	1.00		1.00	1.00		1.00
Parking Bus, Adj	1.00	1.00	1.00	1.00	1.00	1.00	1.00	1.00	1.00	1.00	1.00	1.00
Adj Sat Flow, veh/h/ln	1900	1863	1900	1900	1863	1900	1863	1863	1900	1863	1863	1900
Adj Flow Rate, veh/h	2	7	2	85	220	98	70	675	50	188	1793	264
Adj No. of Lanes	0	1	0	0	1	0	1	2	0	1	2	0
Peak Hour Factor	0.92	0.92	0.92	0.92	0.92	0.92	0.92	0.92	0.92	0.92	0.92	0.92
Percent Heavy Veh, %	2	2	2	2	2	2	2	2	2	2	2	2
Cap, veh/h	85	263	67	119	231	97	147	1885	139	528	1844	265
Arrive On Green	0.24	0.24	0.24	0.24	0.24	0.24	0.04	0.56	0.56	0.07	0.59	0.59
Sat Flow, veh/h	160	1118	284	297	983	411	1774	3341	247	1774	3107	446
Grp Volume(v), veh/h	11	0	0	403	0	0	70	357	368	188	1002	1055
Grp Sat Flow(s),veh/h/ln	1562	0	0	1692	0	0	1774	1770	1819	1774	1770	1784
Q Serve(g_s), s	0.0	0.0	0.0	17.7	0.0	0.0	1.5	9.8	9.9	3.8	47.4	52.5
Cycle Q Clear(g_c), s	0.4	0.0	0.0	21.0	0.0	0.0	1.5	9.8	9.9	3.8	47.4	52.5
Prop In Lane	0.18		0.18	0.21		0.24	1.00		0.14	1.00		0.25
Lane Grp Cap(c), veh/h	415	0	0	447	0	0	147	998	1026	528	1050	1059
V/C Ratio(X)	0.03	0.00	0.00	0.90	0.00	0.00	0.48	0.36	0.36	0.36	0.95	1.00
Avail Cap(c_a), veh/h	415	0	0	447	0	0	161	998	1026	589	1050	1059
HCM Platoon Ratio	1.00	1.00	1.00	1.00	1.00	1.00	1.00	1.00	1.00	1.00	1.00	1.00
Upstream Filter(I)	1.00	0.00	0.00	1.00	0.00	0.00	1.00	1.00	1.00	1.00	1.00	1.00
Uniform Delay (d), s/veh	26.3	0.0	0.0	34.2	0.0	0.0	21.6	10.6	10.6	7.4	17.0	18.0
Incr Delay (d2), s/veh	0.0	0.0	0.0	21.2	0.0	0.0	2.4	1.0	1.0	0.4	18.7	26.8
Initial Q Delay(d3),s/veh	0.0	0.0	0.0	0.0	0.0	0.0	0.0	0.0	0.0	0.0	0.0	0.0
%ile BackOfQ(95%),veh/ln	0.4	0.0	0.0	18.3	0.0	0.0	1.9	8.7	8.9	3.4	37.0	42.8
LnGrp Delay(d),s/veh	26.3	0.0	0.0	55.4	0.0	0.0	24.0	11.6	11.6	7.8	35.7	44.8
LnGrp LOS	C			E			C	B	B	A	D	D
Approach Vol, veh/h		11			403			795			2245	
Approach Delay, s/veh		26.3			55.4			12.7			37.7	
Approach LOS		C			E			B			D	

Timer	1	2	3	4	5	6	7	8
Assigned Phs	1	2		4	5	6		8
Phs Duration (G+Y+Rc), s	9.9	54.4		25.0	7.3	57.0		25.0
Change Period (Y+Rc), s	4.0	4.0		4.0	4.0	4.0		4.0
Max Green Setting (Gmax), s	9.0	48.0		21.0	4.0	53.0		21.0
Max Q Clear Time (g_c+I1), s	5.8	11.9		2.4	3.5	54.5		23.0
Green Ext Time (p_c), s	0.1	30.2		2.5	0.0	0.0		0.0

Intersection Summary	
HCM 2010 Ctrl Delay	33.9
HCM 2010 LOS	C

Movement	EBL	EBT	EBR	WBL	WBT	WBR	NBL	NBT	NBR	SBL	SBT	SBR
Lane Configurations												
Traffic Volume (veh/h)	195	74	95	104	9	214	1	1651	108	112	855	1
Future Volume (veh/h)	195	74	95	104	9	214	1	1651	108	112	855	1
Number	7	4	14	3	8	18	5	2	12	1	6	16
Initial Q (Qb), veh	0	0	0	0	0	0	0	0	0	0	0	0
Ped-Bike Adj(A_pbT)	1.00		1.00	1.00		1.00	1.00		1.00	1.00		1.00
Parking Bus, Adj	1.00	1.00	1.00	1.00	1.00	1.00	1.00	1.00	1.00	1.00	1.00	1.00
Adj Sat Flow, veh/h/ln	1900	1863	1900	1900	1863	1900	1863	1863	1900	1863	1863	1900
Adj Flow Rate, veh/h	212	80	103	113	10	233	1	1795	117	122	929	1
Adj No. of Lanes	0	1	0	0	1	0	1	2	0	1	2	0
Peak Hour Factor	0.92	0.92	0.92	0.92	0.92	0.92	0.92	0.92	0.92	0.92	0.92	0.92
Percent Heavy Veh, %	2	2	2	2	2	2	2	2	2	2	2	2
Cap, veh/h	247	77	95	184	33	321	310	1722	111	143	1991	2
Arrive On Green	0.33	0.33	0.33	0.33	0.33	0.33	0.00	0.51	0.51	0.04	0.55	0.55
Sat Flow, veh/h	580	235	287	413	100	973	1774	3376	218	1774	3628	4
Grp Volume(v), veh/h	395	0	0	356	0	0	1	932	980	122	453	477
Grp Sat Flow(s),veh/h/ln	1103	0	0	1486	0	0	1774	1770	1824	1774	1770	1862
Q Serve(g_s), s	12.1	0.0	0.0	0.0	0.0	0.0	0.0	51.0	51.0	3.2	15.5	15.5
Cycle Q Clear(g_c), s	33.0	0.0	0.0	20.9	0.0	0.0	0.0	51.0	51.0	3.2	15.5	15.5
Prop In Lane	0.54		0.26	0.32		0.65	1.00		0.12	1.00		0.00
Lane Grp Cap(c), veh/h	419	0	0	538	0	0	310	903	930	143	971	1022
V/C Ratio(X)	0.94	0.00	0.00	0.66	0.00	0.00	0.00	1.03	1.05	0.85	0.47	0.47
Avail Cap(c_a), veh/h	419	0	0	538	0	0	379	903	930	143	971	1022
HCM Platoon Ratio	1.00	1.00	1.00	1.00	1.00	1.00	1.00	1.00	1.00	1.00	1.00	1.00
Upstream Filter(I)	1.00	0.00	0.00	1.00	0.00	0.00	1.00	1.00	1.00	1.00	1.00	1.00
Uniform Delay (d), s/veh	35.9	0.0	0.0	29.3	0.0	0.0	12.6	24.5	24.5	24.0	13.7	13.7
Incr Delay (d2), s/veh	29.7	0.0	0.0	3.0	0.0	0.0	0.0	38.7	44.5	36.4	1.6	1.5
Initial Q Delay(d3),s/veh	0.0	0.0	0.0	0.0	0.0	0.0	0.0	0.0	0.0	0.0	0.0	0.0
%ile BackOfQ(95%),veh/ln	20.5	0.0	0.0	14.0	0.0	0.0	0.0	61.7	66.3	5.8	12.6	13.1
LnGrp Delay(d),s/veh	65.7	0.0	0.0	32.3	0.0	0.0	12.6	63.2	69.0	60.3	15.3	15.2
LnGrp LOS	E			C			B	F	F	E	B	B
Approach Vol, veh/h		395			356			1913			1052	
Approach Delay, s/veh		65.7			32.3			66.2			20.5	
Approach LOS		E			C			E			C	

Timer	1	2	3	4	5	6	7	8
Assigned Phs	1	2		4	5	6		8
Phs Duration (G+Y+Rc), s	8.0	55.0		37.0	4.1	58.9		37.0
Change Period (Y+Rc), s	4.0	4.0		4.0	4.0	4.0		4.0
Max Green Setting (Gmax), s	4.0	51.0		33.0	4.0	51.0		33.0
Max Q Clear Time (g_c+I1), s	5.2	53.0		35.0	2.0	17.5		22.9
Green Ext Time (p_c), s	0.0	0.0		0.0	0.0	26.2		3.8

Intersection Summary	
HCM 2010 Ctrl Delay	49.9
HCM 2010 LOS	D

Movement	EBL	EBT	EBR	WBL	WBT	WBR	NBL	NBT	NBR	SBL	SBT	SBR
Lane Configurations												
Traffic Volume (veh/h)	137	0	94	0	0	0	201	1354	0	0	2241	505
Future Volume (veh/h)	137	0	94	0	0	0	201	1354	0	0	2241	505
Number	7	4	14	3	8	18	5	2	12	1	6	16
Initial Q (Qb), veh	0	0	0	0	0	0	0	0	0	0	0	0
Ped-Bike Adj(A_pbT)	1.00		1.00	1.00		1.00	1.00		1.00	1.00		1.00
Parking Bus, Adj	1.00	1.00	1.00	1.00	1.00	1.00	1.00	1.00	1.00	1.00	1.00	1.00
Adj Sat Flow, veh/h/ln	1863	1863	1863	0	1863	0	1863	1863	0	0	1863	1863
Adj Flow Rate, veh/h	149	0	102	0	0	0	218	1472	0	0	2436	549
Adj No. of Lanes	2	1	1	0	1	0	1	3	0	0	3	1
Peak Hour Factor	0.92	0.92	0.92	0.92	0.92	0.92	0.92	0.92	0.92	0.92	0.92	0.92
Percent Heavy Veh, %	2	2	2	0	2	0	2	2	0	0	2	2
Cap, veh/h	628	198	168	0	198	0	283	3803	0	0	3050	950
Arrive On Green	0.11	0.00	0.11	0.00	0.00	0.00	0.08	0.75	0.00	0.00	0.60	0.60
Sat Flow, veh/h	3442	1863	1583	0	1863	0	1774	5253	0	0	5253	1583
Grp Volume(v), veh/h	149	0	102	0	0	0	218	1472	0	0	2436	549
Grp Sat Flow(s),veh/h/ln	1721	1863	1583	0	1863	0	1774	1695	0	0	1695	1583
Q Serve(g_s), s	2.2	0.0	3.4	0.0	0.0	0.0	2.2	5.6	0.0	0.0	20.2	11.6
Cycle Q Clear(g_c), s	2.2	0.0	3.4	0.0	0.0	0.0	2.2	5.6	0.0	0.0	20.2	11.6
Prop In Lane	1.00		1.00	0.00		0.00	1.00		0.00	0.00		1.00
Lane Grp Cap(c), veh/h	628	198	168	0	198	0	283	3803	0	0	3050	950
V/C Ratio(X)	0.24	0.00	0.61	0.00	0.00	0.00	0.77	0.39	0.00	0.00	0.80	0.58
Avail Cap(c_a), veh/h	1267	544	462	0	544	0	312	3803	0	0	3050	950
HCM Platoon Ratio	1.00	1.00	1.00	1.00	1.00	1.00	1.00	1.00	1.00	1.00	1.00	1.00
Upstream Filter(I)	1.00	0.00	1.00	0.00	0.00	0.00	1.00	1.00	0.00	0.00	1.00	1.00
Uniform Delay (d), s/veh	22.9	0.0	23.4	0.0	0.0	0.0	13.2	2.5	0.0	0.0	8.4	6.7
Incr Delay (d2), s/veh	0.2	0.0	3.5	0.0	0.0	0.0	10.2	0.3	0.0	0.0	2.3	2.6
Initial Q Delay(d3),s/veh	0.0	0.0	0.0	0.0	0.0	0.0	0.0	0.0	0.0	0.0	0.0	0.0
%ile BackOfQ(95%),veh/ln	1.9	0.0	0.3	0.0	0.0	0.0	5.2	4.9	0.0	0.0	15.1	9.6
LnGrp Delay(d),s/veh	23.1	0.0	26.9	0.0	0.0	0.0	23.4	2.8	0.0	0.0	10.7	9.3
LnGrp LOS	C		C				C	A			B	A
Approach Vol, veh/h		251			0			1690			2985	
Approach Delay, s/veh		24.6			0.0			5.4			10.4	
Approach LOS		C						A			B	

Timer	1	2	3	4	5	6	7	8
Assigned Phs		2		4	5	6		8
Phs Duration (G+Y+Rc), s		45.0		9.8	8.1	36.9		9.8
Change Period (Y+Rc), s		4.0		4.0	4.0	4.0		4.0
Max Green Setting (Gmax), s		41.0		16.0	5.0	32.0		16.0
Max Q Clear Time (g_c+I1), s		7.6		5.4	4.2	22.2		0.0
Green Ext Time (p_c), s		32.5		0.6	0.1	9.7		0.0

Intersection Summary	
HCM 2010 Ctrl Delay	9.4
HCM 2010 LOS	A

Movement	EBL	EBT	EBR	WBL	WBT	WBR	NBL	NBT	NBR	SBL	SBT	SBR
Lane Configurations												
Traffic Volume (veh/h)	523	0	224	0	0	0	168	2299	0	0	2067	351
Future Volume (veh/h)	523	0	224	0	0	0	168	2299	0	0	2067	351
Number	7	4	14	3	8	18	5	2	12	1	6	16
Initial Q (Qb), veh	0	0	0	0	0	0	0	0	0	0	0	0
Ped-Bike Adj(A_pbT)	1.00		1.00	1.00		1.00	1.00		1.00	1.00		1.00
Parking Bus, Adj	1.00	1.00	1.00	1.00	1.00	1.00	1.00	1.00	1.00	1.00	1.00	1.00
Adj Sat Flow, veh/h/ln	1863	1863	1863	0	1863	0	1863	1863	0	0	1863	1863
Adj Flow Rate, veh/h	568	0	243	0	0	0	183	2499	0	0	2247	382
Adj No. of Lanes	2	1	1	0	1	0	1	3	0	0	3	1
Peak Hour Factor	0.92	0.92	0.92	0.92	0.92	0.92	0.92	0.92	0.92	0.92	0.92	0.92
Percent Heavy Veh, %	2	2	2	0	2	0	2	2	0	0	2	2
Cap, veh/h	1005	406	345	0	406	0	266	3255	0	0	2531	788
Arrive On Green	0.22	0.00	0.22	0.00	0.00	0.00	0.07	0.64	0.00	0.00	0.50	0.50
Sat Flow, veh/h	3442	1863	1583	0	1863	0	1774	5253	0	0	5253	1583
Grp Volume(v), veh/h	568	0	243	0	0	0	183	2499	0	0	2247	382
Grp Sat Flow(s),veh/h/ln	1721	1863	1583	0	1863	0	1774	1695	0	0	1695	1583
Q Serve(g_s), s	8.7	0.0	8.0	0.0	0.0	0.0	2.6	19.6	0.0	0.0	22.4	9.0
Cycle Q Clear(g_c), s	8.7	0.0	8.0	0.0	0.0	0.0	2.6	19.6	0.0	0.0	22.4	9.0
Prop In Lane	1.00		1.00	0.00		0.00	1.00		0.00	0.00		1.00
Lane Grp Cap(c), veh/h	1005	406	345	0	406	0	266	3255	0	0	2531	788
V/C Ratio(X)	0.56	0.00	0.70	0.00	0.00	0.00	0.69	0.77	0.00	0.00	0.89	0.48
Avail Cap(c_a), veh/h	1235	530	450	0	530	0	266	3255	0	0	2531	788
HCM Platoon Ratio	1.00	1.00	1.00	1.00	1.00	1.00	1.00	1.00	1.00	1.00	1.00	1.00
Upstream Filter(I)	1.00	0.00	1.00	0.00	0.00	0.00	1.00	1.00	0.00	0.00	1.00	1.00
Uniform Delay (d), s/veh	20.6	0.0	20.3	0.0	0.0	0.0	12.7	7.2	0.0	0.0	12.7	9.3
Incr Delay (d2), s/veh	0.5	0.0	3.4	0.0	0.0	0.0	7.3	1.8	0.0	0.0	5.1	2.1
Initial Q Delay(d3),s/veh	0.0	0.0	0.0	0.0	0.0	0.0	0.0	0.0	0.0	0.0	0.0	0.0
%ile BackOfQ(95%),veh/ln	7.5	0.0	0.6	0.0	0.0	0.0	3.7	14.3	0.0	0.0	16.9	7.7
LnGrp Delay(d),s/veh	21.1	0.0	23.7	0.0	0.0	0.0	20.0	9.0	0.0	0.0	17.8	11.5
LnGrp LOS	C		C				C	A			B	B
Approach Vol, veh/h		811			0			2682			2629	
Approach Delay, s/veh		21.9			0.0			9.7			16.9	
Approach LOS		C						A			B	

Timer	1	2	3	4	5	6	7	8
Assigned Phs		2		4	5	6		8
Phs Duration (G+Y+Rc), s		40.0		16.2	8.0	32.0		16.2
Change Period (Y+Rc), s		4.0		4.0	4.0	4.0		4.0
Max Green Setting (Gmax), s		36.0		16.0	4.0	28.0		16.0
Max Q Clear Time (g_c+I1), s		21.6		10.7	4.6	24.4		0.0
Green Ext Time (p_c), s		14.4		1.6	0.0	3.6		0.0

Intersection Summary	
HCM 2010 Ctrl Delay	14.4
HCM 2010 LOS	B

Movement	EBL	EBT	EBR	WBL	WBT	WBR	NBL	NBT	NBR	SBL	SBT	SBR
Lane Configurations												
Traffic Volume (veh/h)	23	37	97	705	127	171	76	1116	212	97	1995	35
Future Volume (veh/h)	23	37	97	705	127	171	76	1116	212	97	1995	35
Number	7	4	14	3	8	18	5	2	12	1	6	16
Initial Q (Qb), veh	0	0	0	0	0	0	0	0	0	0	0	0
Ped-Bike Adj(A_pbT)	1.00		1.00	1.00		1.00	1.00		1.00	1.00		1.00
Parking Bus, Adj	1.00	1.00	1.00	1.00	1.00	1.00	1.00	1.00	1.00	1.00	1.00	1.00
Adj Sat Flow, veh/h/ln	1863	1863	1863	1863	1863	1863	1863	1863	1863	1863	1863	1863
Adj Flow Rate, veh/h	25	40	105	766	138	186	83	1213	230	105	2168	38
Adj No. of Lanes	2	2	1	2	2	1	1	3	1	1	3	1
Peak Hour Factor	0.92	0.92	0.92	0.92	0.92	0.92	0.92	0.92	0.92	0.92	0.92	0.92
Percent Heavy Veh, %	2	2	2	2	2	2	2	2	2	2	2	2
Cap, veh/h	73	363	231	798	1109	581	165	2120	1027	269	2172	710
Arrive On Green	0.02	0.10	0.10	0.23	0.31	0.31	0.04	0.42	0.42	0.05	0.43	0.43
Sat Flow, veh/h	3442	3539	1583	3442	3539	1583	1774	5085	1583	1774	5085	1583
Grp Volume(v), veh/h	25	40	105	766	138	186	83	1213	230	105	2168	38
Grp Sat Flow(s),veh/h/ln	1721	1770	1583	1721	1770	1583	1774	1695	1583	1774	1695	1583
Q Serve(g_s), s	0.6	0.8	5.0	18.0	2.3	6.9	2.2	15.0	4.9	2.7	34.9	1.1
Cycle Q Clear(g_c), s	0.6	0.8	5.0	18.0	2.3	6.9	2.2	15.0	4.9	2.7	34.9	1.1
Prop In Lane	1.00		1.00	1.00		1.00	1.00		1.00	1.00		1.00
Lane Grp Cap(c), veh/h	73	363	231	798	1109	581	165	2120	1027	269	2172	710
V/C Ratio(X)	0.34	0.11	0.45	0.96	0.12	0.32	0.50	0.57	0.22	0.39	1.00	0.05
Avail Cap(c_a), veh/h	168	691	378	798	1339	683	175	2120	1027	369	2172	710
HCM Platoon Ratio	1.00	1.00	1.00	1.00	1.00	1.00	1.00	1.00	1.00	1.00	1.00	1.00
Upstream Filter(I)	1.00	1.00	1.00	1.00	1.00	1.00	1.00	1.00	1.00	1.00	1.00	1.00
Uniform Delay (d), s/veh	39.5	33.4	32.0	31.1	20.1	18.6	19.7	18.3	5.9	14.1	23.4	12.8
Incr Delay (d2), s/veh	2.8	0.1	1.4	22.5	0.0	0.3	2.4	1.1	0.5	0.9	18.9	0.1
Initial Q Delay(d3),s/veh	0.0	0.0	0.0	0.0	0.0	0.0	0.0	0.0	0.0	0.0	0.0	0.0
%ile BackOfQ(95%),veh/ln	0.6	0.8	4.0	16.5	2.0	5.5	2.1	11.6	4.0	2.5	27.4	0.9
LnGrp Delay(d),s/veh	42.3	33.5	33.4	53.7	20.2	18.9	22.0	19.4	6.4	15.1	42.4	12.9
LnGrp LOS	D	C	C	D	C	B	C	B	A	B	D	B
Approach Vol, veh/h		170			1090			1526			2311	
Approach Delay, s/veh		34.7			43.5			17.6			40.6	
Approach LOS		C			D			B			D	

Timer	1	2	3	4	5	6	7	8
Assigned Phs	1	2	3	4	5	6	7	8
Phs Duration (G+Y+Rc), s	8.4	38.2	23.0	12.4	7.5	39.0	5.7	29.7
Change Period (Y+Rc), s	4.0	4.0	4.0	4.0	4.0	4.0	4.0	4.0
Max Green Setting (Gmax), s	9.0	30.0	19.0	16.0	4.0	35.0	4.0	31.0
Max Q Clear Time (g_c+I1), s	4.7	17.0	20.0	7.0	4.2	36.9	2.6	8.9
Green Ext Time (p_c), s	0.1	12.6	0.0	1.4	0.0	0.0	0.0	2.1

Intersection Summary	
HCM 2010 Ctrl Delay	34.2
HCM 2010 LOS	C

Movement	EBL	EBT	EBR	WBL	WBT	WBR	NBL	NBT	NBR	SBL	SBT	SBR
Lane Configurations												
Traffic Volume (veh/h)	57	167	118	296	147	141	80	1756	638	278	1580	35
Future Volume (veh/h)	57	167	118	296	147	141	80	1756	638	278	1580	35
Number	7	4	14	3	8	18	5	2	12	1	6	16
Initial Q (Qb), veh	0	0	0	0	0	0	0	0	0	0	0	0
Ped-Bike Adj(A_pbT)	1.00		1.00	1.00		1.00	1.00		1.00	1.00		1.00
Parking Bus, Adj	1.00	1.00	1.00	1.00	1.00	1.00	1.00	1.00	1.00	1.00	1.00	1.00
Adj Sat Flow, veh/h/ln	1863	1863	1863	1863	1863	1863	1863	1863	1863	1863	1863	1863
Adj Flow Rate, veh/h	62	182	128	322	160	153	87	1909	693	302	1717	38
Adj No. of Lanes	2	2	1	2	2	1	1	3	1	1	3	1
Peak Hour Factor	0.92	0.92	0.92	0.92	0.92	0.92	0.92	0.92	0.92	0.92	0.92	0.92
Percent Heavy Veh, %	2	2	2	2	2	2	2	2	2	2	2	2
Cap, veh/h	125	428	261	398	709	525	242	2244	882	331	2688	895
Arrive On Green	0.04	0.12	0.12	0.12	0.20	0.20	0.04	0.44	0.44	0.13	0.53	0.53
Sat Flow, veh/h	3442	3539	1583	3442	3539	1583	1774	5085	1583	1774	5085	1583
Grp Volume(v), veh/h	62	182	128	322	160	153	87	1909	693	302	1717	38
Grp Sat Flow(s),veh/h/ln	1721	1770	1583	1721	1770	1583	1774	1695	1583	1774	1695	1583
Q Serve(g_s), s	1.5	4.0	6.2	7.7	3.2	6.0	2.2	28.2	28.9	9.3	20.1	0.9
Cycle Q Clear(g_c), s	1.5	4.0	6.2	7.7	3.2	6.0	2.2	28.2	28.9	9.3	20.1	0.9
Prop In Lane	1.00		1.00	1.00		1.00	1.00		1.00	1.00		1.00
Lane Grp Cap(c), veh/h	125	428	261	398	709	525	242	2244	882	331	2688	895
V/C Ratio(X)	0.49	0.42	0.49	0.81	0.23	0.29	0.36	0.85	0.79	0.91	0.64	0.04
Avail Cap(c_a), veh/h	205	675	372	410	886	604	270	2244	882	331	2688	895
HCM Platoon Ratio	1.00	1.00	1.00	1.00	1.00	1.00	1.00	1.00	1.00	1.00	1.00	1.00
Upstream Filter(I)	1.00	1.00	1.00	1.00	1.00	1.00	1.00	1.00	1.00	1.00	1.00	1.00
Uniform Delay (d), s/veh	39.6	34.1	31.8	36.2	28.1	20.7	13.1	20.9	14.6	23.0	14.1	8.1
Incr Delay (d2), s/veh	3.0	0.7	1.4	11.2	0.2	0.3	0.9	4.3	7.0	28.3	1.2	0.1
Initial Q Delay(d3),s/veh	0.0	0.0	0.0	0.0	0.0	0.0	0.0	0.0	0.0	0.0	0.0	0.0
%ile BackOfQ(95%),veh/ln	1.4	3.6	5.1	7.6	2.8	4.8	2.0	20.1	20.4	14.5	14.8	0.7
LnGrp Delay(d),s/veh	42.6	34.8	33.2	47.4	28.2	21.0	14.0	25.2	21.6	51.3	15.2	8.2
LnGrp LOS	D	C	C	D	C	C	B	C	C	D	B	A
Approach Vol, veh/h		372			635			2689			2057	
Approach Delay, s/veh		35.6			36.2			23.9			20.4	
Approach LOS		D			D			C			C	

Timer	1	2	3	4	5	6	7	8
Assigned Phs	1	2	3	4	5	6	7	8
Phs Duration (G+Y+Rc), s	15.0	41.0	13.7	14.1	7.7	48.3	7.1	20.8
Change Period (Y+Rc), s	4.0	4.0	4.0	4.0	4.0	4.0	4.0	4.0
Max Green Setting (Gmax), s	11.0	37.0	10.0	16.0	5.0	43.0	5.0	21.0
Max Q Clear Time (g_c+I1), s	11.3	30.9	9.7	8.2	4.2	22.1	3.5	8.0
Green Ext Time (p_c), s	0.0	6.0	0.0	2.0	0.0	20.4	0.0	2.6

Intersection Summary	
HCM 2010 Ctrl Delay	24.8
HCM 2010 LOS	C

Movement	EBL	EBT	EBR	WBL	WBT	WBR	NBL	NBT	NBR	SBL	SBT	SBR
Lane Configurations												
Traffic Volume (veh/h)	34	451	0	18	1582	1261	5	51	26	536	83	27
Future Volume (veh/h)	34	451	0	18	1582	1261	5	51	26	536	83	27
Number	7	4	14	3	8	18	5	2	12	1	6	16
Initial Q (Qb), veh	0	0	0	0	0	0	0	0	0	0	0	0
Ped-Bike Adj(A_pbT)	1.00		1.00	1.00		1.00	1.00		1.00	1.00		1.00
Parking Bus, Adj	1.00	1.00	1.00	1.00	1.00	1.00	1.00	1.00	1.00	1.00	1.00	1.00
Adj Sat Flow, veh/h/ln	1863	1863	1900	1863	1863	1863	1863	1863	1900	1863	1863	1900
Adj Flow Rate, veh/h	36	475	0	19	1665	1327	5	54	27	564	87	28
Adj No. of Lanes	1	3	0	1	3	2	1	1	0	3	1	0
Peak Hour Factor	0.95	0.95	0.95	0.95	0.95	0.95	0.95	0.95	0.95	0.95	0.95	0.95
Percent Heavy Veh, %	2	2	2	2	2	2	2	2	2	2	2	2
Cap, veh/h	126	1876	0	399	1876	1431	9	334	167	724	573	185
Arrive On Green	0.37	0.37	0.00	0.37	0.37	0.37	0.01	0.29	0.29	0.14	0.42	0.42
Sat Flow, veh/h	80	5253	0	915	5085	2787	1774	1173	586	5003	1351	435
Grp Volume(v), veh/h	36	475	0	19	1665	1327	5	0	81	564	0	115
Grp Sat Flow(s),veh/h/ln	80	1695	0	915	1695	1393	1774	0	1759	1668	0	1786
Q Serve(g_s), s	3.7	3.9	0.0	0.9	18.3	22.0	0.2	0.0	2.1	6.5	0.0	2.4
Cycle Q Clear(g_c), s	22.0	3.9	0.0	4.8	18.3	22.0	0.2	0.0	2.1	6.5	0.0	2.4
Prop In Lane	1.00		0.00	1.00		1.00	1.00		0.33	1.00		0.24
Lane Grp Cap(c), veh/h	126	1876	0	399	1876	1431	9	0	502	724	0	758
V/C Ratio(X)	0.29	0.25	0.00	0.05	0.89	0.93	0.53	0.00	0.16	0.78	0.00	0.15
Avail Cap(c_a), veh/h	126	1876	0	399	1876	1431	119	0	502	755	0	758
HCM Platoon Ratio	1.00	1.00	1.00	1.00	1.00	1.00	1.00	1.00	1.00	1.00	1.00	1.00
Upstream Filter(I)	1.00	1.00	0.00	1.00	1.00	1.00	1.00	0.00	1.00	1.00	0.00	1.00
Uniform Delay (d), s/veh	29.6	13.1	0.0	14.7	17.7	13.5	29.6	0.0	16.0	24.6	0.0	10.6
Incr Delay (d2), s/veh	1.2	0.1	0.0	0.0	5.6	10.7	39.0	0.0	0.7	5.0	0.0	0.4
Initial Q Delay(d3),s/veh	0.0	0.0	0.0	0.0	0.0	0.0	0.0	0.0	0.0	0.0	0.0	0.0
%ile BackOfQ(95%),veh/ln	1.1	3.3	0.0	0.4	14.5	17.8	0.3	0.0	2.0	6.0	0.0	2.2
LnGrp Delay(d),s/veh	30.8	13.2	0.0	14.8	23.3	24.2	68.5	0.0	16.7	29.6	0.0	11.0
LnGrp LOS	C	B		B	C	C	E		B	C		B
Approach Vol, veh/h		511			3011			86			679	
Approach Delay, s/veh		14.4			23.6			19.7			26.5	
Approach LOS		B			C			B			C	

Timer	1	2	3	4	5	6	7	8
Assigned Phs	1	2		4	5	6		8
Phs Duration (G+Y+Rc), s	12.6	21.0		26.0	4.3	29.3		26.0
Change Period (Y+Rc), s	4.0	4.0		4.0	4.0	4.0		4.0
Max Green Setting (Gmax), s	9.0	17.0		22.0	4.0	22.0		22.0
Max Q Clear Time (g_c+I1), s	8.5	4.1		24.0	2.2	4.4		24.0
Green Ext Time (p_c), s	0.1	0.8		0.0	0.0	1.0		0.0

Intersection Summary	
HCM 2010 Ctrl Delay	22.9
HCM 2010 LOS	C

Movement	EBL	EBT	EBR	WBL	WBT	WBR	NBL	NBT	NBR	SBL	SBT	SBR
Lane Configurations												
Traffic Volume (veh/h)	83	1284	5	80	922	1172	6	18	121	1301	48	74
Future Volume (veh/h)	83	1284	5	80	922	1172	6	18	121	1301	48	74
Number	7	4	14	3	8	18	5	2	12	1	6	16
Initial Q (Qb), veh	0	0	0	0	0	0	0	0	0	0	0	0
Ped-Bike Adj(A_pbT)	1.00		1.00	1.00		1.00	1.00		1.00	1.00		1.00
Parking Bus, Adj	1.00	1.00	1.00	1.00	1.00	1.00	1.00	1.00	1.00	1.00	1.00	1.00
Adj Sat Flow, veh/h/ln	1863	1863	1900	1863	1863	1863	1863	1863	1900	1863	1863	1900
Adj Flow Rate, veh/h	87	1352	5	84	971	1234	6	19	127	1369	51	78
Adj No. of Lanes	1	3	0	1	3	2	1	1	0	3	1	0
Peak Hour Factor	0.95	0.95	0.95	0.95	0.95	0.95	0.95	0.95	0.95	0.95	0.95	0.95
Percent Heavy Veh, %	2	2	2	2	2	2	2	2	2	2	2	2
Cap, veh/h	197	1373	5	181	1326	1528	11	42	281	1438	320	490
Arrive On Green	0.05	0.26	0.26	0.05	0.26	0.26	0.01	0.20	0.20	0.29	0.48	0.48
Sat Flow, veh/h	1774	5230	19	1774	5085	2787	1774	210	1405	5003	665	1018
Grp Volume(v), veh/h	87	876	481	84	971	1234	6	0	146	1369	0	129
Grp Sat Flow(s),veh/h/ln	1774	1695	1859	1774	1695	1393	1774	0	1615	1668	0	1683
Q Serve(g_s), s	2.8	20.6	20.6	2.7	14.0	20.9	0.3	0.0	6.4	21.5	0.0	3.4
Cycle Q Clear(g_c), s	2.8	20.6	20.6	2.7	14.0	20.9	0.3	0.0	6.4	21.5	0.0	3.4
Prop In Lane	1.00		0.01	1.00		1.00	1.00		0.87	1.00		0.60
Lane Grp Cap(c), veh/h	197	890	488	181	1326	1528	11	0	323	1438	0	810
V/C Ratio(X)	0.44	0.98	0.98	0.46	0.73	0.81	0.54	0.00	0.45	0.95	0.00	0.16
Avail Cap(c_a), veh/h	216	890	488	181	1326	1528	89	0	323	1438	0	810
HCM Platoon Ratio	1.00	1.00	1.00	1.00	1.00	1.00	1.00	1.00	1.00	1.00	1.00	1.00
Upstream Filter(I)	1.00	1.00	1.00	1.00	1.00	1.00	1.00	0.00	1.00	1.00	0.00	1.00
Uniform Delay (d), s/veh	22.0	29.3	29.3	22.7	27.0	14.6	39.6	0.0	28.1	28.0	0.0	11.7
Incr Delay (d2), s/veh	1.6	26.3	36.7	1.9	2.1	3.3	35.5	0.0	4.5	13.9	0.0	0.4
Initial Q Delay(d3),s/veh	0.0	0.0	0.0	0.0	0.0	0.0	0.0	0.0	0.0	0.0	0.0	0.0
%ile BackOfQ(95%),veh/ln	2.6	18.8	22.0	2.6	11.0	17.1	0.4	0.0	5.8	17.4	0.0	3.0
LnGrp Delay(d),s/veh	23.6	55.7	66.0	24.5	29.1	18.0	75.1	0.0	32.7	41.9	0.0	12.1
LnGrp LOS	C	E	E	C	C	B	E		C	D		B
Approach Vol, veh/h		1444			2289			152			1498	
Approach Delay, s/veh		57.2			23.0			34.3			39.3	
Approach LOS		E			C			C			D	

Timer	1	2	3	4	5	6	7	8
Assigned Phs	1	2	3	4	5	6	7	8
Phs Duration (G+Y+Rc), s	27.0	20.0	8.0	25.0	4.5	42.5	8.1	24.9
Change Period (Y+Rc), s	4.0	4.0	4.0	4.0	4.0	4.0	4.0	4.0
Max Green Setting (Gmax), s	23.0	16.0	4.0	21.0	4.0	35.0	5.0	20.0
Max Q Clear Time (g_c+I1), s	23.5	8.4	4.7	22.6	2.3	5.4	4.8	22.9
Green Ext Time (p_c), s	0.0	0.9	0.0	0.0	0.0	1.8	0.0	0.0

Intersection Summary	
HCM 2010 Ctrl Delay	37.0
HCM 2010 LOS	D

APPENDIX D
CONCEPTUAL ENGINEER OPINIONS OF PROBABLE CONSTRUCTION COST

NEW MEXICO DEPARTMENT OF TRANSPORTATION

ESTIMATE OF PROBABLE CONSTRUCTION COST

March-16
CONCEPTUAL
DESIGN

Name of Road: Santolina: Atrisco Vista and I-40 WB Intersection

County of: Bernalillo

Length of Right-of-Way:

Type: ROADWAY CONSTRUCTION

Pavement:

Prepared by: Bohannan-Huston Inc.

Thickness in center:

Title Consulting Engineer

edges:

NO.	ITEM	UNIT	QTY	PRICE	AMOUNT
608004	CONCRETE SIDEWALK 4"	SY	335	$60.00	$20,100.00
704701	HOT THERMOPLASTIC PAVEMENT MARKING 6"	LF	3200	$1.50	$4,800.00
704715	HOT THERMOPLASTIC PAVEMENT MARKING COMBINATION (THRU/RT) ARROW	EA	3	$150.00	$450.00
704717	HOT THERMOPLASTIC PAVEMENT MARKING RIGHT ARROW	EA	0	$125.00	$0.00
704718	HOT THERMOPLASTIC PAVEMENT MARKING LEFT ARROW	EA	6	$150.00	$900.00
704719	HOT THERMOPLASTIC PAVEMENT MARKING THRU ARROW	EA	0	$125.00	$0.00
704720	HOT THERMOPLASTIC PAVEMENT MARKING WORD (ONLY)	EA	4	$300.00	$1,200.00
7XXXXX	SIGNALIZATION OF INTERSECTION	LS	1	$425,000.00	$425,000.00
	TOTAL				$452,450.00
	ENGINEERING & CONTINGENCIES @ 30%				$135,735.00
	NEW MEXICO GROSS RECEIPTS TAX @ 7.1875%				$42,276.00
	PROJECT TOTAL				**$630,461.00**

NEW MEXICO DEPARTMENT OF TRANSPORTATION

ESTIMATE OF PROBABLE CONSTRUCTION COST

March-16
CONCEPTUAL DESIGN

Name of Road: Santolina: Atrisco Vista and I-40 EB Intersection

County of: Bernalillo

Length of Right-of-Way:

Type: ROADWAY CONSTRUCTION

Pavement:

Prepared by: Bohannan-Huston Inc.

Thickness in center:

Title Consulting Engineer

edges:

NO.	ITEM	UNIT	QTY	PRICE	AMOUNT
608004	CONCRETE SIDEWALK 4"	SY	835	$60.00	$50,100.00
704701	HOT THERMOPLASTIC PAVEMENT MARKING 6"	LF	0	$1.50	$0.00
704715	HOT THERMOPLASTIC PAVEMENT MARKING COMBINATION (THRU/RT) ARROW	EA	3	$150.00	$450.00
704717	HOT THERMOPLASTIC PAVEMENT MARKING RIGHT ARROW	EA	3	$125.00	$375.00
704718	HOT THERMOPLASTIC PAVEMENT MARKING LEFT ARROW	EA	0	$150.00	$0.00
704719	HOT THERMOPLASTIC PAVEMENT MARKING THRU ARROW	EA	3	$125.00	$375.00
704720	HOT THERMOPLASTIC PAVEMENT MARKING WORD (ONLY)	EA	2	$300.00	$600.00
7XXXXX	SIGNALIZATION OF INTERSECTION	LS	1	$425,000.00	$425,000.00
	TOTAL				$476,900.00
	ENGINEERING & CONTINGENCIES @ 30%				$143,070.00
	NEW MEXICO GROSS RECEIPTS TAX @ 7.1875%				$44,560.00
	PROJECT TOTAL				**$664,530.00**

NEW MEXICO DEPARTMENT OF TRANSPORTATION

ESTIMATE OF PROBABLE CONSTRUCTION COST

March-16
CONCEPTUAL DESIGN

Name of Road: Santolina: Atrisco Vista and Central Intersection

County of: Bernalillo

Length of Right-of-Way:

Type: ROADWAY CONSTRUCTION

Pavement:

Prepared by: Bohannan-Huston Inc.

Thickness in center:

Title Consulting Engineer

edges:

NO.	ITEM	UNIT	QTY	PRICE	AMOUNT
45XXXX	INTERSECTION PAVING	SY	5700	$50.00	$285,000.00
608004	CONCRETE SIDEWALK 4"	SY	3180	$60.00	$190,800.00
704701	HOT THERMOPLASTIC PAVEMENT MARKING 6"	LF	7850	$1.50	$11,775.00
704715	HOT THERMOPLASTIC PAVEMENT MARKING COMBINATION (THRU/RT) ARROW	EA	0	$150.00	$0.00
704717	HOT THERMOPLASTIC PAVEMENT MARKING RIGHT ARROW	EA	15	$125.00	$1,875.00
704718	HOT THERMOPLASTIC PAVEMENT MARKING LEFT ARROW	EA	18	$150.00	$2,700.00
704719	HOT THERMOPLASTIC PAVEMENT MARKING THRU ARROW	EA	27	$125.00	$3,375.00
704720	HOT THERMOPLASTIC PAVEMENT MARKING WORD (ONLY)	EA	22	$300.00	$6,600.00
7XXXXX	SIGNALIZATION OF INTERSECTION	LS	1	$425,000.00	$425,000.00
	TOTAL				$927,125.00
	ENGINEERING & CONTINGENCIES @ 30%				$278,138.00
	NEW MEXICO GROSS RECEIPTS TAX @ 7.1875%				$86,628.00
	PROJECT TOTAL				**$1,291,891.00**

NEW MEXICO DEPARTMENT OF TRANSPORTATION

ESTIMATE OF PROBABLE CONSTRUCTION COST

March-16
CONCEPTUAL DESIGN

Name of Road: Santolina: Central and 118th Intersection

County of: Bernalillo

Length of Right-of-Way:

Type: ROADWAY CONSTRUCTION

Pavement:

Prepared by: Bohannan-Huston Inc.

Thickness in center:

Title Consulting Engineer

edges:

NO.	ITEM	UNIT	QTY	PRICE	AMOUNT
45XXXX	INTERSECTION PAVING	SY	6550	$50.00	$327,500.00
608004	CONCRETE SIDEWALK 4"	SY	2370	$60.00	$142,200.00
704701	HOT THERMOPLASTIC PAVEMENT MARKING 6"	LF	5700	$1.50	$8,550.00
704715	HOT THERMOPLASTIC PAVEMENT MARKING COMBINATION (THRU/RT) ARROW	EA	3	$150.00	$450.00
704717	HOT THERMOPLASTIC PAVEMENT MARKING RIGHT ARROW	EA	9	$125.00	$1,125.00
704718	HOT THERMOPLASTIC PAVEMENT MARKING LEFT ARROW	EA	15	$150.00	$2,250.00
704719	HOT THERMOPLASTIC PAVEMENT MARKING THRU ARROW	EA	3	$125.00	$375.00
704720	HOT THERMOPLASTIC PAVEMENT MARKING WORD (ONLY)	EA	16	$300.00	$4,800.00
7XXXXX	SIGNALIZATION OF INTERSECTION	LS	1	$425,000.00	$425,000.00
	TOTAL				$912,250.00
	ENGINEERING & CONTINGENCIES @ 30%				$273,675.00
	NEW MEXICO GROSS RECEIPTS TAX @ 7.1875%				$85,238.00
	PROJECT TOTAL				**$1,271,163.00**

NEW MEXICO DEPARTMENT OF TRANSPORTATION

ESTIMATE OF PROBABLE CONSTRUCTION COST

March-16
CONCEPTUAL DESIGN

Name of Road: Santolina: Gibson and 118th Intersection

County of: Bernalillo

Length of Right-of-Way:

Type: ROADWAY CONSTRUCTION

Pavement:

Prepared by: Bohannan-Huston Inc.

Thickness in center:

Title Consulting Engineer

edges:

NO.	ITEM	UNIT	QTY	PRICE	AMOUNT
45XXXX	INTERSECTION PAVING	SY	27430	$50.00	$1,371,500.00
608004	CONCRETE SIDEWALK 4"	SY	3670	$60.00	$220,200.00
704701	HOT THERMOPLASTIC PAVEMENT MARKING 6"	LF	17000	$1.50	$25,500.00
704715	HOT THERMOPLASTIC PAVEMENT MARKING COMBINATION (THRU/RT) ARROW	EA	9	$150.00	$1,350.00
704717	HOT THERMOPLASTIC PAVEMENT MARKING RIGHT ARROW	EA	6	$125.00	$750.00
704718	HOT THERMOPLASTIC PAVEMENT MARKING LEFT ARROW	EA	18	$150.00	$2,700.00
704719	HOT THERMOPLASTIC PAVEMENT MARKING THRU ARROW	EA	21	$125.00	$2,625.00
704720	HOT THERMOPLASTIC PAVEMENT MARKING WORD (ONLY)	EA	16	$300.00	$4,800.00
7XXXXX	SIGNALIZATION OF INTERSECTION	LS	1	$425,000.00	$425,000.00
	TOTAL				$2,054,425.00
	ENGINEERING & CONTINGENCIES @ 30%				$616,328.00
	NEW MEXICO GROSS RECEIPTS TAX @ 7.1875%				$191,960.00
	PROJECT TOTAL				**$2,862,713.00**

NEW MEXICO DEPARTMENT OF TRANSPORTATION

ESTIMATE OF PROBABLE CONSTRUCTION COST

March-16
CONCEPTUAL DESIGN

Name of Road: Santolina: Dennis Chavez and 118th Intersection

County of: Bernalillo

Length of Right-of-Way:

Type: ROADWAY CONSTRUCTION

Pavement:

Prepared by: Bohannan-Huston Inc.

Thickness in center:

Title Consulting Engineer

edges:

NO.	ITEM	UNIT	QTY	PRICE	AMOUNT
45XXXX	INTERSECTION PAVING	SY	7350	$50.00	$367,500.00
608004	CONCRETE SIDEWALK 4"	SY	3220	$60.00	$193,200.00
704701	HOT THERMOPLASTIC PAVEMENT MARKING 6"	LF	8825	$1.50	$13,237.50
704715	HOT THERMOPLASTIC PAVEMENT MARKING COMBINATION (THRU/RT) ARROW	EA	0	$150.00	$0.00
704717	HOT THERMOPLASTIC PAVEMENT MARKING RIGHT ARROW	EA	12	$125.00	$1,500.00
704718	HOT THERMOPLASTIC PAVEMENT MARKING LEFT ARROW	EA	15	$150.00	$2,250.00
704719	HOT THERMOPLASTIC PAVEMENT MARKING THRU ARROW	EA	24	$125.00	$3,000.00
704720	HOT THERMOPLASTIC PAVEMENT MARKING WORD (ONLY)	EA	18	$300.00	$5,400.00
7XXXXX	SIGNALIZATION OF INTERSECTION	LS	1	$425,000.00	$425,000.00
	TOTAL				$1,011,087.50
	ENGINEERING & CONTINGENCIES @ 30%				$303,326.00
	NEW MEXICO GROSS RECEIPTS TAX @ 7.1875%				$94,473.00
	PROJECT TOTAL				**$1,408,886.50**

NEW MEXICO DEPARTMENT OF TRANSPORTATION

ESTIMATE OF PROBABLE CONSTRUCTION COST

March-16
CONCEPTUAL
DESIGN

Name of Road: Santolina: Gun Club and 118th Intersection

County of: Bernalillo

Length of Right-of-Way:

Type: ROADWAY CONSTRUCTION

Pavement:

Prepared by: Bohannan-Huston Inc.

Thickness in center:

Title Consulting Engineer

edges:

NO.	ITEM	UNIT	QTY	PRICE	AMOUNT
45XXXX	INTERSECTION PAVING	SY	700	$50.00	$35,000.00
608004	CONCRETE SIDEWALK 4"	SY	485	$60.00	$29,100.00
704701	HOT THERMOPLASTIC PAVEMENT MARKING 6"	LF	1050	$1.50	$1,575.00
704715	HOT THERMOPLASTIC PAVEMENT MARKING COMBINATION (THRU/RT) ARROW	EA	0	$150.00	$0.00
704717	HOT THERMOPLASTIC PAVEMENT MARKING RIGHT ARROW	EA	6	$125.00	$750.00
704718	HOT THERMOPLASTIC PAVEMENT MARKING LEFT ARROW	EA	6	$150.00	$900.00
704719	HOT THERMOPLASTIC PAVEMENT MARKING THRU ARROW	EA	6	$125.00	$750.00
704720	HOT THERMOPLASTIC PAVEMENT MARKING WORD (ONLY)	EA	8	$300.00	$2,400.00
7XXXXX	SIGNALIZATION OF INTERSECTION	LS	1	$325,000.00	$325,000.00
	TOTAL				$395,475.00
	ENGINEERING & CONTINGENCIES @ 30%				$118,643.00
	NEW MEXICO GROSS RECEIPTS TAX @ 7.1875%				$36,952.00
	PROJECT TOTAL				**$551,070.00**

NEW MEXICO DEPARTMENT OF TRANSPORTATION

ESTIMATE OF PROBABLE CONSTRUCTION COST

March-16
CONCEPTUAL DESIGN

Name of Road: Santolina: Unser and Dennis Chavez Intersection

County of: Bernalillo

Length of Right-of-Way:

Type: ROADWAY CONSTRUCTION

Pavement:

Prepared by: Bohannan-Huston Inc.

Thickness in center:

Title Consulting Engineer

edges:

NO.	ITEM	UNIT	QTY	PRICE	AMOUNT
45XXXX	INTERSECTION PAVING	SY	10050	$50.00	$502,500.00
608004	CONCRETE SIDEWALK 4"	SY	1885	$60.00	$113,100.00
704701	HOT THERMOPLASTIC PAVEMENT MARKING 6"	LF	10000	$1.50	$15,000.00
704715	HOT THERMOPLASTIC PAVEMENT MARKING COMBINATION (THRU/RT) ARROW	EA	3	$150.00	$450.00
704717	HOT THERMOPLASTIC PAVEMENT MARKING RIGHT ARROW	EA	9	$125.00	$1,125.00
704718	HOT THERMOPLASTIC PAVEMENT MARKING LEFT ARROW	EA	12	$150.00	$1,800.00
704719	HOT THERMOPLASTIC PAVEMENT MARKING THRU ARROW	EA	21	$125.00	$2,625.00
704720	HOT THERMOPLASTIC PAVEMENT MARKING WORD (ONLY)	EA	14	$300.00	$4,200.00
7XXXXX	SIGNALIZATION OF INTERSECTION	LS	1	$425,000.00	$425,000.00
	TOTAL				$1,065,800.00
	ENGINEERING & CONTINGENCIES @ 30%				$319,740.00
	NEW MEXICO GROSS RECEIPTS TAX @ 7.1875%				$99,586.00
	PROJECT TOTAL				**$1,485,126.00**

NEW MEXICO DEPARTMENT OF TRANSPORTATION

ESTIMATE OF PROBABLE CONSTRUCTION COST

March-16
CONCEPTUAL DESIGN

Name of Road: Santolina: Coors and Dennis Chavez/Rio Bravo Intersection

County of: Bernalillo

Length of Right-of-Way:

Type: ROADWAY CONSTRUCTION

Pavement:

Prepared by: Bohannan-Huston Inc.

Thickness in center:

Title Consulting Engineer

edges:

NO.	ITEM	UNIT	QTY	PRICE	AMOUNT
45XXXX	INTERSECTION PAVING	SY	6950	$50.00	$347,500.00
608004	CONCRETE SIDEWALK 4"	SY	2535	$60.00	$152,100.00
704701	HOT THERMOPLASTIC PAVEMENT MARKING 6"	LF	8900	$1.50	$13,350.00
704715	HOT THERMOPLASTIC PAVEMENT MARKING COMBINATION (THRU/RT) ARROW	EA	0	$150.00	$0.00
704717	HOT THERMOPLASTIC PAVEMENT MARKING RIGHT ARROW	EA	12	$125.00	$1,500.00
704718	HOT THERMOPLASTIC PAVEMENT MARKING LEFT ARROW	EA	30	$150.00	$4,500.00
704719	HOT THERMOPLASTIC PAVEMENT MARKING THRU ARROW	EA	30	$125.00	$3,750.00
704720	HOT THERMOPLASTIC PAVEMENT MARKING WORD (ONLY)	EA	28	$300.00	$8,400.00
7XXXXX	SIGNALIZATION OF INTERSECTION	LS	1	$425,000.00	$425,000.00
	TOTAL				$956,100.00
	ENGINEERING & CONTINGENCIES @ 30%				$286,830.00
	NEW MEXICO GROSS RECEIPTS TAX @ 7.1875%				$89,336.00
	PROJECT TOTAL				**$1,332,266.00**

NEW MEXICO DEPARTMENT OF TRANSPORTATION

ESTIMATE OF PROBABLE CONSTRUCTION COST

March-16
CONCEPTUAL DESIGN

Name of Road: Santolina: Isleta and Rio Bravo Intersection

County of: Bernalillo

Length of Right-of-Way:

Type: ROADWAY CONSTRUCTION

Pavement:

Prepared by: Bohannan-Huston Inc.

Thickness in center:

Title Consulting Engineer

edges:

NO.	ITEM	UNIT	QTY	PRICE	AMOUNT
45XXXX	INTERSECTION PAVING	SY	22770	$50.00	$1,138,500.00
608004	CONCRETE SIDEWALK 4"	SY	950	$60.00	$57,000.00
704701	HOT THERMOPLASTIC PAVEMENT MARKING 6"	LF	18000	$1.50	$27,000.00
704715	HOT THERMOPLASTIC PAVEMENT MARKING COMBINATION (THRU/RT) ARROW	EA	0	$150.00	$0.00
704717	HOT THERMOPLASTIC PAVEMENT MARKING RIGHT ARROW	EA	18	$125.00	$2,250.00
704718	HOT THERMOPLASTIC PAVEMENT MARKING LEFT ARROW	EA	21	$150.00	$3,150.00
704719	HOT THERMOPLASTIC PAVEMENT MARKING THRU ARROW	EA	30	$125.00	$3,750.00
704720	HOT THERMOPLASTIC PAVEMENT MARKING WORD (ONLY)	EA	26	$300.00	$7,800.00
7XXXXX	SIGNALIZATION OF INTERSECTION	LS	1	$425,000.00	$425,000.00
	TOTAL				$1,664,450.00
	ENGINEERING & CONTINGENCIES @ 30%				$499,335.00
	NEW MEXICO GROSS RECEIPTS TAX @ 7.1875%				$155,522.00
	PROJECT TOTAL				**$2,319,307.00**

NEW MEXICO DEPARTMENT OF TRANSPORTATION

ESTIMATE OF PROBABLE CONSTRUCTION COST

March-16
CONCEPTUAL
DESIGN

Name of Road: Santolina: Unser and Gun Club Intersection

County of: Bernalillo

Length of Right-of-Way:

Type: ROADWAY CONSTRUCTION

Pavement:

Prepared by: Bohannan-Huston Inc.

Thickness in center:

Title Consulting Engineer

edges:

NO.	ITEM	UNIT	QTY	PRICE	AMOUNT
45XXXX	INTERSECTION PAVING	SY	11760	$50.00	$588,000.00
608004	CONCRETE SIDEWALK 4"	SY	1670	$60.00	$100,200.00
704701	HOT THERMOPLASTIC PAVEMENT MARKING 6"	LF	10000	$1.50	$15,000.00
704715	HOT THERMOPLASTIC PAVEMENT MARKING COMBINATION (THRU/RT) ARROW	EA	9	$150.00	$1,350.00
704717	HOT THERMOPLASTIC PAVEMENT MARKING RIGHT ARROW	EA	3	$125.00	$375.00
704718	HOT THERMOPLASTIC PAVEMENT MARKING LEFT ARROW	EA	15	$150.00	$2,250.00
704719	HOT THERMOPLASTIC PAVEMENT MARKING THRU ARROW	EA	3	$125.00	$375.00
704720	HOT THERMOPLASTIC PAVEMENT MARKING WORD (ONLY)	EA	12	$300.00	$3,600.00
7XXXXX	SIGNALIZATION OF INTERSECTION	LS	1	$325,000.00	$325,000.00
	TOTAL				$1,036,150.00
	ENGINEERING & CONTINGENCIES @ 30%				$310,845.00
	NEW MEXICO GROSS RECEIPTS TAX @ 7.1875%				$96,815.00
	PROJECT TOTAL				**$1,443,810.00**

NEW MEXICO DEPARTMENT OF TRANSPORTATION

ESTIMATE OF PROBABLE CONSTRUCTION COST

March-16
CONCEPTUAL
DESIGN

Name of Road: Santolina: Coors and Gun Club Intersection

County of: Bernalillo

Length of Right-of-Way:

Type: ROADWAY CONSTRUCTION

Pavement:

Prepared by: Bohannan-Huston Inc.

Thickness in center:

Title Consulting Engineer

edges:

NO.	ITEM	UNIT	QTY	PRICE	AMOUNT
45XXXX	INTERSECTION PAVING	SY	8700	$50.00	$435,000.00
608004	CONCRETE SIDEWALK 4"	SY	1020	$60.00	$61,200.00
704701	HOT THERMOPLASTIC PAVEMENT MARKING 6"	LF	2450	$1.50	$3,675.00
704715	HOT THERMOPLASTIC PAVEMENT MARKING COMBINATION (THRU/RT) ARROW	EA	3	$150.00	$450.00
704717	HOT THERMOPLASTIC PAVEMENT MARKING RIGHT ARROW	EA	9	$125.00	$1,125.00
704718	HOT THERMOPLASTIC PAVEMENT MARKING LEFT ARROW	EA	12	$150.00	$1,800.00
704719	HOT THERMOPLASTIC PAVEMENT MARKING THRU ARROW	EA	15	$125.00	$1,875.00
704720	HOT THERMOPLASTIC PAVEMENT MARKING WORD (ONLY)	EA	14	$300.00	$4,200.00
7XXXXX	SIGNALIZATION OF INTERSECTION	LS	1	$325,000.00	$325,000.00
	TOTAL				$834,325.00
	ENGINEERING & CONTINGENCIES @ 30%				$250,298.00
	NEW MEXICO GROSS RECEIPTS TAX @ 7.1875%				$77,957.00
	PROJECT TOTAL				**$1,162,580.00**

NEW MEXICO DEPARTMENT OF TRANSPORTATION

ESTIMATE OF PROBABLE CONSTRUCTION COST

March-16
CONCEPTUAL DESIGN

Name of Road: Santolina: Isleta and Gun Club Intersection

County of: Bernalillo

Length of Right-of-Way:

Type: ROADWAY CONSTRUCTION

Pavement:

Prepared by: Bohannan-Huston Inc.

Thickness in center:

Title Consulting Engineer

edges:

NO.	ITEM	UNIT	QTY	PRICE	AMOUNT
45XXXX	INTERSECTION PAVING	SY	500	$50.00	$25,000.00
608004	CONCRETE SIDEWALK 4"	SY	320	$60.00	$19,200.00
704701	HOT THERMOPLASTIC PAVEMENT MARKING 6"	LF	1000	$1.50	$1,500.00
704715	HOT THERMOPLASTIC PAVEMENT MARKING COMBINATION (THRU/RT) ARROW	EA	3	$150.00	$450.00
704717	HOT THERMOPLASTIC PAVEMENT MARKING RIGHT ARROW	EA	3	$125.00	$375.00
704718	HOT THERMOPLASTIC PAVEMENT MARKING LEFT ARROW	EA	6	$150.00	$900.00
704719	HOT THERMOPLASTIC PAVEMENT MARKING THRU ARROW	EA	6	$125.00	$750.00
704720	HOT THERMOPLASTIC PAVEMENT MARKING WORD (ONLY)	EA	6	$300.00	$1,800.00
7XXXXX	SIGNALIZATION OF INTERSECTION	LS	1	$325,000.00	$325,000.00
	TOTAL				$374,975.00
	ENGINEERING & CONTINGENCIES @ 30%				$112,493.00
	NEW MEXICO GROSS RECEIPTS TAX @ 7.1875%				$35,037.00
	PROJECT TOTAL				**$522,505.00**

NEW MEXICO DEPARTMENT OF TRANSPORTATION

ESTIMATE OF PROBABLE CONSTRUCTION COST

March-16
CONCEPTUAL
DESIGN

Name of Road: Santolina: Broadway and Rio Bravo Intersection

County of: Bernalillo

Length of Right-of-Way:

Type: ROADWAY CONSTRUCTION

Pavement:

Prepared by: Bohannan-Huston Inc.

Thickness in center:

Title Consulting Engineer

edges:

NO.	ITEM	UNIT	QTY	PRICE	AMOUNT
45XXXX	INTERSECTION PAVING	SY	9950	$50.00	$497,500.00
608004	CONCRETE SIDEWALK 4"	SY	2800	$60.00	$168,000.00
704701	HOT THERMOPLASTIC PAVEMENT MARKING 6"	LF	8900	$1.50	$13,350.00
704715	HOT THERMOPLASTIC PAVEMENT MARKING COMBINATION (THRU/RT) ARROW	EA	0	$150.00	$0.00
704717	HOT THERMOPLASTIC PAVEMENT MARKING RIGHT ARROW	EA	21	$125.00	$2,625.00
704718	HOT THERMOPLASTIC PAVEMENT MARKING LEFT ARROW	EA	30	$150.00	$4,500.00
704719	HOT THERMOPLASTIC PAVEMENT MARKING THRU ARROW	EA	36	$125.00	$4,500.00
704720	HOT THERMOPLASTIC PAVEMENT MARKING WORD (ONLY)	EA	34	$300.00	$10,200.00
7XXXXX	SIGNALIZATION OF INTERSECTION	LS	1	$425,000.00	$425,000.00
	TOTAL				$1,125,675.00
	ENGINEERING & CONTINGENCIES @ 30%				$337,703.00
	NEW MEXICO GROSS RECEIPTS TAX @ 7.1875%				$105,180.00
	PROJECT TOTAL				**$1,568,558.00**

NEW MEXICO DEPARTMENT OF TRANSPORTATION

ESTIMATE OF PROBABLE CONSTRUCTION COST

March-16
CONCEPTUAL DESIGN

Name of Road: Santolina: Central and 106th Intersection

County of: Bernalillo

Length of Right-of-Way:

Type: ROADWAY CONSTRUCTION

Pavement:

Prepared by: Bohannan-Huston Inc.

Thickness in center:

Title Consulting Engineer

edges:

NO.	ITEM	UNIT	QTY	PRICE	AMOUNT
45XXXX	INTERSECTION PAVING	SY	11250	$50.00	$562,500.00
608004	CONCRETE SIDEWALK 4"	SY	2250	$60.00	$135,000.00
704701	HOT THERMOPLASTIC PAVEMENT MARKING 6"	LF	10500	$1.50	$15,750.00
704715	HOT THERMOPLASTIC PAVEMENT MARKING COMBINATION (THRU/RT) ARROW	EA	3	$150.00	$450.00
704717	HOT THERMOPLASTIC PAVEMENT MARKING RIGHT ARROW	EA	9	$125.00	$1,125.00
704718	HOT THERMOPLASTIC PAVEMENT MARKING LEFT ARROW	EA	18	$150.00	$2,700.00
704719	HOT THERMOPLASTIC PAVEMENT MARKING THRU ARROW	EA	15	$125.00	$1,875.00
704720	HOT THERMOPLASTIC PAVEMENT MARKING WORD (ONLY)	EA	18	$300.00	$5,400.00
7XXXXX	SIGNALIZATION OF INTERSECTION	LS	1	$425,000.00	$425,000.00
	TOTAL				$1,149,800.00
	ENGINEERING & CONTINGENCIES @ 30%				$344,940.00
	NEW MEXICO GROSS RECEIPTS TAX @ 7.1875%				$107,434.00
	PROJECT TOTAL				**$1,602,174.00**

NEW MEXICO DEPARTMENT OF TRANSPORTATION

ESTIMATE OF PROBABLE CONSTRUCTION COST

March-16
CONCEPTUAL
DESIGN

Name of Road: Santolina: Central and 98th Intersection

County of: Bernalillo

Length of Right-of-Way:

Type: ROADWAY CONSTRUCTION

Pavement:

Prepared by: Bohannan-Huston Inc.

Thickness in center:

Title Consulting Engineer

edges:

NO.	ITEM	UNIT	QTY	PRICE	AMOUNT
45XXXX	INTERSECTION PAVING	SY	4830	$50.00	$241,500.00
608004	CONCRETE SIDEWALK 4"	SY	2520	$60.00	$151,200.00
704701	HOT THERMOPLASTIC PAVEMENT MARKING 6"	LF	6650	$1.50	$9,975.00
704715	HOT THERMOPLASTIC PAVEMENT MARKING COMBINATION (THRU/RT) ARROW	EA	6	$150.00	$900.00
704717	HOT THERMOPLASTIC PAVEMENT MARKING RIGHT ARROW	EA	6	$125.00	$750.00
704718	HOT THERMOPLASTIC PAVEMENT MARKING LEFT ARROW	EA	24	$150.00	$3,600.00
704719	HOT THERMOPLASTIC PAVEMENT MARKING THRU ARROW	EA	18	$125.00	$2,250.00
704720	HOT THERMOPLASTIC PAVEMENT MARKING WORD (ONLY)	EA	20	$300.00	$6,000.00
7XXXXX	SIGNALIZATION OF INTERSECTION	LS	1	$425,000.00	$425,000.00
	TOTAL				$841,175.00
	ENGINEERING & CONTINGENCIES @ 30%				$252,353.00
	NEW MEXICO GROSS RECEIPTS TAX @ 7.1875%				$78,597.00
	PROJECT TOTAL				**$1,172,125.00**

NEW MEXICO DEPARTMENT OF TRANSPORTATION

ESTIMATE OF PROBABLE CONSTRUCTION COST

March-16
CONCEPTUAL DESIGN

Name of Road: Santolina: Principal Arterial

County of: Bernalillo

Length of Right-of-Way:

Type: ROADWAY CONSTRUCTION

Pavement:

Prepared by: Bohannan-Huston Inc.

Thickness in center:

Title Consulting Engineer

edges:

NO.	ITEM	UNIT	QTY	PRICE	AMOUNT
207000	SUBGRADE PREPARATION	SY	63360	$2.00	$126,720.00
303160	BASE COURSE 6"	SY	63360	$7.50	$475,200.00
417000	MISCELLANEOUS PAVING (TRAIL)	SY	3520	$20.00	$70,400.00
423250	HMA SP-III COMPLETE (x2 APPLICATIONS)	SY	63360	$40.00	$2,534,400.00
608004	CONCRETE SIDEWALK 4"	SY	3520	$60.00	$211,200.00
609424	CONCRETE VERTICAL CURB & GUTTER B 6" X 24"	EA	10560	$25.00	$264,000.00
609430	CONCRETE VERTICAL CURB & GUTTER B 6" X 30"	LF	10560	$40.00	$422,400.00
632000	CLASS A SEEDING	AC	5	$5,000.00	$25,000.00
704701	HOT THERMOPLASTIC PAVEMENT MARKINGS 6"	LF	36960	$1.50	$55,440.00
XXXXXX	LIGHTING				
	TOTAL				$4,184,760.00
	ENGINEERING & CONTINGENCIES @ 30%				$1,255,428.00
	NEW MEXICO GROSS RECEIPTS TAX @ 7.1875%				$391,014.00
	TOTAL ROADWAY COST (PER MILE)				**$5,831,202.00**

SANTOLINA MASTER PLAN

2025

3/30/2016

ITEM NO. / CROSS SECTION TYPE	SEGMENT DESCRIPTION	FUNDING SOURCE	QUANTITY	miles	UNIT COST	UNIT	TOTAL COST
A	ATRISCO VISTA (6 LANE PRINCIPAL ARTERIAL)	TRUNK	5,778	1.0943	$5,065,636.90	LIN MILE	$ 5,543,419
	-MAJOR SIGNALIZED INTERSECTIONS	TRUNK	3		$ -	EA	$ -
							$ -
B	ATRISCO VISTA (4 LANE PRINCIPAL ARTERIAL)	TRUNK	2,478	0.4693	$4,153,233.90	LIN MILE	$ 1,949,188
	-MAJOR SIGNALIZED INTERSECTIONS	TRUNK	1		$ -	EA	$ -
	-MINOR SIGNALIZED INTERSECTIONS	TRUNK	2		$ -	EA	$ -
							$ -
E	ATRISCO VISTA (2 LANE PRINCIPAL)	TRUNK	9,096	1.7227	$3,235,381.40	LIN MILE	$ 5,573,680
	-MAJOR SIGNALIZED INTERSECTIONS	TRUNK	1		$ -	EA	$ -
B	SANTOLINA LOOP ROAD (4 LANE PRINCIPAL ARTERIAL)	TRUNK	13,498	2.5564	$4,153,233.90	LIN MILE	$ 10,617,491
	-MINOR SIGNALIZED INTERSECTIONS	TRUNK	5		$ -	EA	$ -
					$ -		**$ -**
							$ -
E	SANTOLINA LOOP ROAD (2 LANE PRINCIPAL)	TRUNK	4,108	0.7780	$3,235,381.40	LIN MILE	$ 2,517,225
	-MINOR SIGNALIZED INTERSECTIONS	TRUNK	9		$ -	EA	$ -
	N2 (2 LANE COLLECTOR)	TRUNK	4,284	0.8114	$3,564,668.40	LIN MILE	$ 2,892,242
							$ -
F	N3 (2 LANE COLLECTOR)	TRUNK	4,659	0.8824	$3,564,668.40	LIN MILE	$ 3,145,415
F	N4 (2 LANE COLLECTOR)	TRUNK	4,340	0.8220	$3,564,668.40	LIN MILE	$ 2,930,049
E	N5 (2 LANE PRINCIPAL)	TRUNK	6,958	1.3178	$3,235,381.40	LIN MILE	$ 4,263,595
F	N6 (2 LANE COLLECTOR)	TRUNK	6,651	1.2597	$3,564,668.40	LIN MILE	$ 4,490,267
F	N7 (2 LANE COLLECTOR)	TRUNK	4,985	0.9441	$3,564,668.40	LIN MILE	$ 3,365,506
E	SHELLY ROAD (2 LANE PRINCIPAL)	TRUNK	5,705	1.0805	$3,235,381.40	LIN MILE	$ 3,495,805
F	PARALLEL ROAD (2 LANE COLLECTOR)	TRUNK	8,009	1.5169	$3,564,668.40	LIN MILE	$ 5,407,089
F	E1 (2 LANE COLLECTOR)	TRUNK	3,684	0.6977	$3,564,668.40	LIN MILE	$ 2,487,166
F	E2 (2 LANE COLLECTOR)	TRUNK	1,791	0.3392	$3,564,668.40	LIN MILE	$ 1,209,152
E	E3 (2 LANE PRINICIPAL)	TRUNK	8,841	1.6744	$3,235,381.40	LIN MILE	$ 5,417,426
E	E4 (2 LANE PRINCIPAL)	TRUNK	7,029	1.3313	$3,235,381.40	LIN MILE	$ 4,307,101
E	GIBSON (2 LANE PRINCIPAL)	TRUNK	10,208	1.9333	$3,235,381.40	LIN MILE	$ 6,255,071
	-MAJOR SIGNALIZED INTERSECTIONS	TRUNK	2		$ -	EA	$ -
	-MINOR SIGNALIZED INTERSECTIONS	TRUNK	3		$ -	EA	$ -
							$ -
F	E5 (2 LANE COLLECTOR)	TRUNK	3,983	0.7544	$3,564,668.40	LIN MILE	$ 2,689,029
F	E6 (2 LANE COLLECTOR)	TRUNK	2,647	0.5013	$3,564,668.40	LIN MILE	$ 1,787,060
	-MAJOR SIGNALIZED INTERSECTIONS	TRUNK	1		$ -	EA	$ -
F	E8 (2 LANE COLLECTOR)	TRUNK	1,546	0.2928	$3,564,668.40	LIN MILE	$ 1,043,746
							$ -
B	DENNIS CHAVEZ (4 LANE PRINCIPAL ARTERIAL)	TRUNK	8,601	1.6290	$4,153,233.90	LIN MILE	$ 6,765,524
	-MAJOR SIGNALIZED INTERSECTIONS	TRUNK	3		$ -	EA	$ -
	-MINOR SIGNALIZED INTERSECTIONS	TRUNK	1		$ -	EA	$ -
							$ -
E	DENNIS CHAVEZ (2 LANE PRINCIPAL)	TRUNK	5,354	1.01402	$3,235,381.40	LIN MILE	$ 3,280,726
	-MAJOR SIGNALIZED INTERSECTIONS	TRUNK	1		$ -	EA	$ -
	-MINOR SIGNALIZED INTERSECTIONS	TRUNK	2		$ -	EA	$ -
	SIGNALIZED INTERSECTIONS	TRUNK	17		$ 425,000.00	EA	$ 7,225,000
					SUBTOTAL:		**$ 98,657,971**

SANTOLINA MASTER PLAN

2040

3/30/2016

ITEM NO. / CROSS SECTION TYPE	SEGMENT DESCRIPTION	FUNDING SOURCE	QUANTITY	miles	UNIT COST	UNIT	TOTAL COST
A	ATRISCO VISTA (6 LANE PRINCIPAL ARTERIAL)	TRUNK	17,353	3.2866	$5,065,636.90	LIN MILE	$ 16,648,484
	-MAJOR SIGNALIZED INTERSECTIONS	TRUNK	3		$ -	EA	$ -
							$ -
E	ATRISCO VISTA (2 LANE PRINCIPAL)	TRUNK	3,923	0.7430	$4,153,233.90	LIN MILE	$ 3,085,821
							$ -
A	SANTOLINA LOOP ROAD (6 LANE PRINCIPAL ARTERIAL)	TRUNK	22,207	4.2059	$5,065,636.90	LIN MILE	$ 21,305,416
	-MINOR SIGNALIZED INTERSECTIONS	TRUNK	5		$ -	EA	$ -
					$ -		**$ -**
E	SANTOLINA LOOP ROAD (2 LANE PRINCIPAL)	TRUNK	13,689	2.5926	$3,235,381.40	LIN MILE	$ 8,388,094
	-MINOR SIGNALIZED INTERSECTIONS	TRUNK	9		$ -	EA	$ -
							$ -
E	PASEO DEL VOLCAN (2 LANE PRINCIPAL)	TRUNK	5,291	1.0021	$3,235,381.40	LIN MILE	$ 3,242,122
B	PASEO DEL VOLCAN (4 LANE PRINCIPAL ARTERIAL)	TRUNK	6,176	1.1697	$4,153,233.90	LIN MILE	$ 4,858,025
C	N1 (4 LANE MINOR ARTERIAL)	TRUNK	1,135	0.2150	$3,910,440.90	LIN MILE	$ 840,597
F	N2 (2 LANE COLLECTOR)	TRUNK	6,914	1.3095	$3,564,668.40	LIN MILE	$ 4,667,825
F	N3 (2 LANE COLLECTOR)	TRUNK	6,681	1.2653	$3,564,668.40	LIN MILE	$ 4,510,521
F	N4 (2 LANE COLLECTOR)	TRUNK	6,361	1.2047	$3,564,668.40	LIN MILE	$ 4,294,480
E	N5 (2 LANE PRINCIPAL)	TRUNK	12,135	2.2983	$3,235,381.40	LIN MILE	$ 7,435,862
F	N6 (2 LANE COLLECTOR)	TRUNK	6,651	1.2597	$3,564,668.40	LIN MILE	$ 4,490,267
F	N7 (2 LANE COLLECTOR)	TRUNK	3,598	0.6814	$3,564,668.40	LIN MILE	$ 2,429,105
F	N8 (2 LANE COLLECTOR	TRUNK	4,865	0.9214	$3,564,668.40	LIN MILE	$ 3,284,491
F	N9 (2 LANE COLLECTOR)	TRUNK	5,162	0.9777	$3,564,668.40	LIN MILE	$ 3,485,003
E	SHELLY ROAD (2 LANE PRINCIPAL)	TRUNK	5,922	1.1216	$3,235,381.40	LIN MILE	$ 3,628,774
A	PARALLEL ROAD (6 LANE PRINCIPAL ARTERIAL)	TRUNK	8,818	1.6701	$5,065,636.90	LIN MILE	$ 8,459,997
C	PARALLEL ROAD (4 LANE MINOR ARTERIAL)	TRUNK	20,226	3.8307	$3,910,440.90	LIN MILE	$ 14,979,655
F	E1 (2 LANE COLLECTOR)	TRUNK	3,976	0.7530	$3,564,668.40	LIN MILE	$ 2,684,303
F	E2 (2 LANE COLLECTOR)	TRUNK	1,791	0.3392	$3,564,668.40	LIN MILE	$ 1,209,152
F	E3 (2 LANE COLLECTOR)	TRUNK	9,736	1.8439	$3,564,668.40	LIN MILE	$ 6,573,032
F	E4 (2 LANE COLLECTOR)	TRUNK	7,939	1.5036	$3,564,668.40	LIN MILE	$ 5,359,830
F	E5 (2 LANE COLLECTOR)	TRUNK	3,983	0.7544	$3,564,668.40	LIN MILE	$ 2,689,029
F	E6 (2 LANE COLLECTOR)	TRUNK	8,199	1.5528	$3,564,668.40	LIN MILE	$ 5,535,363
F	E7 (2 LANE COLLECTOR)	TRUNK	950	0.1799	$3,564,668.40	LIN MILE	$ 641,370
F	E8 (2 LANE COLLECTOR)	TRUNK	3,956	0.7492	$3,564,668.40	LIN MILE	$ 2,670,801
A	GIBSON (6 LANE PRINCIPAL ARTERIAL)	TRUNK	8,727	1.6528	$5,065,636.90	LIN MILE	$ 8,372,692
	-MAJOR SIGNALIZED INTERSECTIONS	TRUNK	2		$ -	EA	$ -
	-MINOR SIGNALIZED INTERSECTIONS	TRUNK	3		$ -	EA	$ -
B	GIBSON (4 LANE PRINCIPAL ARTERIAL)	TRUNK	2,827	0.5354	$4,153,233.90	LIN MILE	$ 2,223,711
E	GIBSON (2 LANE PRINCIPAL)	TRUNK	8,654	1.6390	$3,235,381.40	LIN MILE	$ 5,302,839
							$ -
A	DENNIS CHAVEZ (6 LANE PRINCIPAL ARTERIAL)	TRUNK	8,601	1.6290	$5,065,636.90	LIN MILE	$ 8,251,807
B	DENNIS CHAVEZ (4 LANE PRINCIPAL ARTERIAL)	TRUNK	5,353	1.0138	$4,153,233.90	LIN MILE	$ 4,210,656
	-MAJOR SIGNALIZED INTERSECTIONS	TRUNK	3		$ -	EA	$ -
	-MINOR SIGNALIZED INTERSECTIONS	TRUNK	1		$ -	EA	$ -
							$ -
E	DENNIS CHAVEZ (2 LANE PRINCIPAL)	TRUNK	2,868	0.54318	$3,235,381.40	LIN MILE	$ 1,757,400
	-MAJOR SIGNALIZED INTERSECTIONS	TRUNK	1		$ -	EA	$ -
	-MINOR SIGNALIZED INTERSECTIONS	TRUNK	2		$ -	EA	$ -
	SIGNALIZED INTERSECTIONS	TRUNK	17		$ 425,000.00	EA	$ 7,225,000
					SUBTOTAL:		**$ 184,741,527**

NEW MEXICO DEPARTMENT OF TRANSPORTATION

ESTIMATE OF PROBABLE CONSTRUCTION COST

March-16
CONCEPTUAL DESIGN

Name of Road: Santolina: 6-Lane Principal Arterial

County of: Bernalillo

Length of Right-of-Way:

Type: ROADWAY CONSTRUCTION

Pavement:

Prepared by: Bohannan-Huston Inc.

Thickness in center:

Title Consulting Engineer

edges:

NO.	ITEM	UNIT	QTY	PRICE	AMOUNT
207000	SUBGRADE PREPARATION	SY	50455	$2.00	$100,910.00
303160	BASE COURSE 6"	SY	50455	$7.50	$378,412.50
417000	MISCELLANEOUS PAVING (TRAIL)	SY	3520	$20.00	$70,400.00
423250	HMA SP-III COMPLETE (x2 APPLICATIONS)	SY	50455	$40.00	$2,018,200.00
608004	CONCRETE SIDEWALK 4"	SY	3520	$60.00	$211,200.00
609424	CONCRETE VERTICAL CURB & GUTTER B 6" X 24"	EA	10560	$25.00	$264,000.00
609430	CONCRETE VERTICAL CURB & GUTTER B 6" X 30"	LF	10560	$40.00	$422,400.00
632000	CLASS A SEEDING	AC	5	$5,000.00	$25,000.00
704701	HOT THERMOPLASTIC PAVEMENT MARKINGS 6"	LF	34320	$1.50	$51,480.00
716000	LIGHTING	LF	5280	$17.68	$93,350.40
	TOTAL				$3,635,352.90
	ENGINEERING & CONTINGENCIES @ 30%				$1,090,606.00
	NEW MEXICO GROSS RECEIPTS TAX @ 7.1875%				$339,678.00
	TOTAL ROADWAY COST (PER MILE)				**$5,065,636.90**

NEW MEXICO DEPARTMENT OF TRANSPORTATION

ESTIMATE OF PROBABLE CONSTRUCTION COST

March-16
CONCEPTUAL
DESIGN

Name of Road: Santolina: 4- Lane Minor Principal

County of: Bernalillo

Length of Right-of-Way:

Type: ROADWAY CONSTRUCTION

Pavement:

Prepared by: Bohannan-Huston Inc.

Thickness in center:

Title Consulting Engineer

edges:

NO.	ITEM	UNIT	QTY	PRICE	AMOUNT
207000	SUBGRADE PREPARATION	SY	37547	$2.00	$75,094.00
303160	BASE COURSE 6"	SY	37547	$7.50	$281,602.50
417000	MISCELLANEOUS PAVING (TRAIL)	SY	3520	$20.00	$70,400.00
423250	HMA SP-III COMPLETE (x2 APPLICATIONS)	SY	37547	$40.00	$1,501,880.00
608004	CONCRETE SIDEWALK 4"	SY	3520	$60.00	$211,200.00
609424	CONCRETE VERTICAL CURB & GUTTER B 6" X 24"	EA	10560	$25.00	$264,000.00
609430	CONCRETE VERTICAL CURB & GUTTER B 6" X 30"	LF	10560	$40.00	$422,400.00
632000	CLASS A SEEDING	AC	5	$5,000.00	$25,000.00
704701	HOT THERMOPLASTIC PAVEMENT MARKINGS 6"	LF	23760	$1.50	$35,640.00
716000	LIGHTING	LF	5280	$17.68	$93,350.40
	TOTAL				$2,980,566.90
	ENGINEERING & CONTINGENCIES @ 30%				$894,170.00
	NEW MEXICO GROSS RECEIPTS TAX @ 7.1875%				$278,497.00
	TOTAL ROADWAY COST (PER MILE)				**$4,153,233.90**

NEW MEXICO DEPARTMENT OF TRANSPORTATION

ESTIMATE OF PROBABLE CONSTRUCTION COST

March-16
CONCEPTUAL
DESIGN

Name of Road: Santolina: 4- Lane Minor Arterial

County of: Bernalillo

Length of Right-of-Way:

Type: ROADWAY CONSTRUCTION

Pavement:

Prepared by: Bohannan-Huston Inc.

Thickness in center:

Title Consulting Engineer

edges:

NO.	ITEM	UNIT	QTY	PRICE	AMOUNT
207000	SUBGRADE PREPARATION	SY	34027	$2.00	$68,054.00
303160	BASE COURSE 6"	SY	34027	$7.50	$255,202.50
417000	MISCELLANEOUS PAVING (TRAIL)	SY	3520	$20.00	$70,400.00
423250	HMA SP-III COMPLETE (x2 APPLICATIONS)	SY	34027	$40.00	$1,361,080.00
608004	CONCRETE SIDEWALK 4"	SY	3520	$60.00	$211,200.00
609424	CONCRETE VERTICAL CURB & GUTTER B 6" X 24"	EA	10560	$25.00	$264,000.00
609430	CONCRETE VERTICAL CURB & GUTTER B 6" X 30"	LF	10560	$40.00	$422,400.00
632000	CLASS A SEEDING	AC	5	$5,000.00	$25,000.00
704701	HOT THERMOPLASTIC PAVEMENT MARKINGS 6"	LF	23760	$1.50	$35,640.00
716000	LIGHTING	LF	5280	$17.68	$93,350.40
	TOTAL				$2,806,326.90
	ENGINEERING & CONTINGENCIES @ 30%				$841,898.00
	NEW MEXICO GROSS RECEIPTS TAX @ 7.1875%				$262,216.00
	TOTAL ROADWAY COST (PER MILE)				**$3,910,440.90**

NEW MEXICO DEPARTMENT OF TRANSPORTATION

ESTIMATE OF PROBABLE CONSTRUCTION COST

March-16
CONCEPTUAL
DESIGN

Name of Road: Santolina: 4- Lane Collector w/o Parking

County of: Bernalillo

Length of Right-of-Way:

Type: ROADWAY CONSTRUCTION

Pavement:

Prepared by: Bohannan-Huston Inc.

Thickness in center:

Title Consulting Engineer

edges:

NO.	ITEM	UNIT	QTY	PRICE	AMOUNT
207000	SUBGRADE PREPARATION	SY	34027	$2.00	$68,054.00
303160	BASE COURSE 6"	SY	34027	$7.50	$255,202.50
417000	MISCELLANEOUS PAVING (TRAIL)	SY	3520	$20.00	$70,400.00
423250	HMA SP-III COMPLETE (x2 APPLICATIONS)	SY	34027	$40.00	$1,361,080.00
608004	CONCRETE SIDEWALK 4"	SY	3520	$60.00	$211,200.00
609424	CONCRETE VERTICAL CURB & GUTTER B 6" X 24"	EA	10560	$25.00	$264,000.00
609430	CONCRETE VERTICAL CURB & GUTTER B 6" X 30"	LF	10560	$40.00	$422,400.00
632000	CLASS A SEEDING	AC	3.5	$5,000.00	$17,500.00
704701	HOT THERMOPLASTIC PAVEMENT MARKINGS 6"	LF	23760	$1.50	$35,640.00
716000	LIGHTING	LF	5280	$17.68	$93,350.40
	TOTAL				$2,798,826.90
	ENGINEERING & CONTINGENCIES @ 30%				$839,648.00
	NEW MEXICO GROSS RECEIPTS TAX @ 7.1875%				$261,515.00
	TOTAL ROADWAY COST (PER MILE)				**$3,899,989.90**

NEW MEXICO DEPARTMENT OF TRANSPORTATION

ESTIMATE OF PROBABLE CONSTRUCTION COST

March-16
CONCEPTUAL DESIGN

Name of Road: Santolina: 4- Lane Minor Principal

County of: Bernalillo

Length of Right-of-Way:

Type: ROADWAY CONSTRUCTION

Pavement:

Prepared by: Bohannan-Huston Inc.

Thickness in center:

Title Consulting Engineer

edges:

NO.	ITEM	UNIT	QTY	PRICE	AMOUNT
207000	SUBGRADE PREPARATION	SY	24640	$2.00	$49,280.00
303160	BASE COURSE 6"	SY	24640	$7.50	$184,800.00
417000	MISCELLANEOUS PAVING (TRAIL)	SY	3520	$20.00	$70,400.00
423250	HMA SP-III COMPLETE (x2 APPLICATIONS)	SY	24640	$40.00	$985,600.00
608004	CONCRETE SIDEWALK 4"	SY	3520	$60.00	$211,200.00
609424	CONCRETE VERTICAL CURB & GUTTER B 6" X 24"	EA	10560	$25.00	$264,000.00
609430	CONCRETE VERTICAL CURB & GUTTER B 6" X 30"	LF	10560	$40.00	$422,400.00
632000	CLASS A SEEDING	AC	5	$5,000.00	$25,000.00
704701	HOT THERMOPLASTIC PAVEMENT MARKINGS 6"	LF	10560	$1.50	$15,840.00
716000	LIGHTING	LF	5280	$17.68	$93,350.40
	TOTAL				$2,321,870.40
	ENGINEERING & CONTINGENCIES @ 30%				$696,561.00
	NEW MEXICO GROSS RECEIPTS TAX @ 7.1875%				$216,950.00
	TOTAL ROADWAY COST (PER MILE)				**$3,235,381.40**

NEW MEXICO DEPARTMENT OF TRANSPORTATION

ESTIMATE OF PROBABLE CONSTRUCTION COST

March-16
CONCEPTUAL
DESIGN

Name of Road: Santolina: 4- Lane Collector

County of: Bernalillo

Length of Right-of-Way:

Type: ROADWAY CONSTRUCTION

Pavement:

Prepared by: Bohannan-Huston Inc.

Thickness in center:

Title Consulting Engineer

edges:

NO.	ITEM	UNIT	QTY	PRICE	AMOUNT
207000	SUBGRADE PREPARATION	SY	29334	$2.00	$58,668.00
303160	BASE COURSE 6"	SY	29334	$7.50	$220,005.00
417000	MISCELLANEOUS PAVING (TRAIL)	SY	3520	$20.00	$70,400.00
423250	HMA SP-III COMPLETE (x2 APPLICATIONS)	SY	29334	$40.00	$1,173,360.00
608004	CONCRETE SIDEWALK 4"	SY	3520	$60.00	$211,200.00
609424	CONCRETE VERTICAL CURB & GUTTER B 6" X 24"	EA	10560	$25.00	$264,000.00
609430	CONCRETE VERTICAL CURB & GUTTER B 6" X 30"	LF	10560	$40.00	$422,400.00
632000	CLASS A SEEDING	AC	5	$5,000.00	$25,000.00
704701	HOT THERMOPLASTIC PAVEMENT MARKINGS 6"	LF	13200	$1.50	$19,800.00
716000	LIGHTING	LF	5280	$17.68	$93,350.40
	TOTAL				$2,558,183.40
	ENGINEERING & CONTINGENCIES @ 30%				$767,455.00
	NEW MEXICO GROSS RECEIPTS TAX @ 7.1875%				$239,030.00
	TOTAL ROADWAY COST (PER MILE)				**$3,564,668.40**