Project-level Carbon Monoxide Analysis

Sunport Boulevard Extension
Control Number A300160

Prepared for:

AECOM
6501 Americas Pkwy NE, Ste. 900
Albuquerque, NM 87110

July 2015

Ecosphere Environmental Services

Durango, CO
Cortez, CO
Pagosa Springs, CO
Santa Fe, NM
Farmington, NM

TABLE OF CONTENTS

1. Introduction **1**

2. Transportation related air quality regulations **3**

3. Air quality monitoring data **4**

4. Air quality analysis methodology **5**

5. Conclusions of the Modeling **6**

6. Regional travel data **10**

7. Other Pollutants **11**

8. Conclusions **13**

9. References **13**

Exhibit 1 – MOVES2014 Output Data **1-1**

Exhibit 2 – Traffic Data **2-1**

Exhibit 3 – CAL3QHC Model Data **3-1**

LIST OF TABLES

Table 1. National Ambient Air Quality Standards 3
Table 2. Five Years of Monitoring Data for Carbon Monoxide 5
Table 3. Northbound I-25 Ramps and Sunport Carbon Monoxide Levels* 7
Table 4. Southbound I-25 and Sunport Blvd Carbon Monoxide Levels* 8
Table 5. Broadway Boulevard and Sunport Boulevard Carbon Monoxide Levels* 9
Table 6. 2035 MOVES2014 Output: Northbound I-25/Sunport Ramps E1-2
Table 7. 2035 MOVES2014 Output: Southbound I-25/Sunport Ramps E1-2
Table 8. 2035 MOVES2014 Output: Broadway/Sunport E1-3

LIST OF FIGURES

Figure 1. Project Area Map 2
Figure 2. Subarea Traffic Statistics 10

ABBREVIATIONS/ACRONYMS

Broadway	Broadway Boulevard
CAAA	Clean Air Act of 1970 and subsequent amendments

CO	carbon monoxide
Ecosphere	Ecosphere Environmental Services
EHD	Environmental Health Department, Air Quality Division
EPA	Environmental Protection Agency
FHWA	Federal Highway Administration
Gibson	Gibson Boulevard
I-25	Interstate 25
LMP	Albuquerque/Bernalillo County Limited Maintenance Plan for Carbon Monoxide
MOVES	Motor Vehicles Emission Simulator
MRCOG	Mid-Region Council of Government
MSAT	mobile source air toxics
NAAQS	National Ambient Air Quality Standards
NMDOT	New Mexico Department of Transportation
NO_2	Nitrogen Dioxide
O_3	Ozone
Pb	Lead
PLCMA	Project-Level Carbon Monoxide Analysis
PM-10	Particulate Matter equal to and less than 10 microns in diameter
PM-2.5	particulate matter equal to and less than 2.5 microns in diameter
ppm	parts per million
SIP	State Implementation Plans
SO_2	Sulfur Dioxide
STIP	Statewide Transportation Improvement Plan
Sunport	Sunport Boulevard
VHT	vehicle hours of travel
VMT	vehicle miles of travel
VPD	vehicles per day
Woodward	Woodward Road

1. INTRODUCTION

The following Project-Level Carbon Monoxide Analysis (PLCMA) was prepared to evaluate potential traffic-related effects of proposed improvements for the Sunport Boulevard (Sunport) Extension project, between Interstate 25 (I-25) and Broadway Boulevard (Broadway), in Bernalillo County, New Mexico (see Figure 1) on carbon monoxide (CO) levels. This project is sponsored by Bernalillo County (County) as the local government lead with participation by the Federal Highway Administration (FHWA) and New Mexico Department of Transportation (NMDOT). The project is identified in the NMDOT's FFY 2014-2017 Statewide Transportation Improvement Plan (STIP) (Control Number A300160), with $9.4 million of federal funds, $1.4 million of County matching funds, and $5.0 million of County non-matching funds

The PLCMA is based on the traffic analysis conducted by AECOM (formerly URS Corporation), which was undertaken to develop geometric design improvements for the project and understand related traffic operations and impacts (URS 2013). Three signalized intersections were analyzed: the Northbound I-25/Sunport Ramps, the Southbound I-25/Sunport Ramps, and the Broadway/Sunport Intersection.

The air quality analysis identifies traffic related CO levels with and without the proposed Sunport Extension project (this type of project-specific analysis is termed a CO hot spot analysis). The modeling and assumptions in the analysis were prepared in conformance with guidance issued the U.S. Environmental Protection Agency (EPA) and the City of Albuquerque, Environmental Health Department, Air Quality Division (EHD). The EPA's regulatory recommendations for CO air quality modeling can be found in Guidelines for Modeling Carbon Monoxide from Roadway Intersections (EPA, 1992). Under this guidance, CO hot-spot analyses must be based on the latest planning assumptions at the time of the analysis and include interagency consultation to develop appropriate modeling procedures and assumptions. The EHD is the local agency involved in air quality monitoring and analysis.

In December 2010, EPA approved the Motor Vehicles Emission Simulator (MOVES2010) model for use in CO hot-spot analyses (Federal Register, vol. 75, No. 243/Monday, December 20, 2010/Notices). The original MOVES2010 model was revised in 2014 with the MOVES2014 model (EPA 2014). For the Sunport Extension PLCMA, the MOVES2014 model was utilized to calculate CO emission rates for free-flow and queue traffic conditions. The emission rates were used as input to the EPA-approved CAL3QHC model, which is a dispersion model that predicts CO concentrations at specific receptor sites located in the immediate vicinity of the major project intersections.

The three project intersections with the highest signal delay and traffic volumes were analyzed to evaluate potential CO-related air quality problems. The PLCMA predicts CO levels at these intersections for the highest volume PM peak hours in the 2035 design year and evaluates the results in relation to the National Ambient Air Quality Standards (NAAQS) and the Albuquerque/Bernalillo County Limited Maintenance Plan for Carbon Monoxide (LMP) (Albuquerque Environmental Health Department 2004) standards. The analysis shows that all of the modeled results are well below the NAAQS and LMP standards. It is the conclusion of this report that the proposed Sunport Extension project will not cause or contribute to NAAQS exceedances.

Figure 1. Project Area Map

2. TRANSPORTATION RELATED AIR QUALITY REGULATIONS

The Clean Air Act of 1970 and subsequent amendments (CAAA) establish the framework for nation-wide air quality standards for pollutants. The EPA initially developed the NAAQS for six "criteria" pollutants: Sulfur Dioxide (SO_2), Particulate Matter equal to and less than 10 microns in diameter (PM-10), Nitrogen Dioxide (NO_2), CO, Ozone (O_3), and Lead (Pb). The EPA subsequently developed a NAAQS for Particulate Matter equal to or less than 2.5 microns in diameter (PM-2.5) (see Table 1).

Table 1. National Ambient Air Quality Standards

Pollutant [final rule cite]		Primary/ Secondary	Averaging Time	Level	Form
Carbon Monoxide [76 FR 54294, Aug 31, 2011]		primary	8-hour	9 ppm	Not to be exceeded more than once per year
			1-hour	35 ppm	
Lead [73 FR 66964, Nov 12, 2008]		primary and secondary	Rolling 3 month average	0.15 $\mu g/m^3$	Not to be exceeded
Nitrogen Dioxide [75 FR 6474, Feb 9, 2010] [61 FR 52852, Oct 8, 1996]		primary	1-hour	100 ppb	98th percentile, averaged over 3 years
		primary and secondary	Annual	53 ppb	Annual Mean
Ozone [73 FR 16436, Mar 27, 2008]		primary and secondary	8-hour	0.075 ppm	Annual fourth-highest daily maximum 8-hr concentration, averaged over 3 years
Particle Pollution Dec 14, 2012	$PM_{2.5}$	primary	Annual	12 $\mu g/m^3$	annual mean, averaged over 3 years
		secondary	Annual	15 $\mu g/m^3$	annual mean, averaged over 3 years
		primary and secondary	24-hour	35 $\mu g/m^3$	98th percentile, averaged over 3 years
	PM_{10}	primary and secondary	24-hour	150 $\mu g/m^3$	Not to be exceeded more than once per year on average over 3 years
Sulfur Dioxide [75 FR 35520, Jun 22, 2010] [38 FR 25678, Sept 14, 1973]		primary	1-hour	75 ppb	99th percentile of 1-hour daily maximum concentrations, averaged over 3 years
		secondary	3-hour	0.5 ppm	Not to be exceeded more than once per year

Source: www.cabq.gov/gis/advanced-map-viewer

Notes: ppb = parts per billion; ppm = parts per million; $\mu g/m^3$ = microgram per cubic meter

Under the CAAA, areas designated as being in violation of the NAAQS (nonattainment areas) are required to provide State Implementation Plans (SIPs) to improve air quality. Of critical interest to transportation agencies is the determination of emission reduction targets for transportation conformity. In New Mexico, the agencies affected by these rules include the FHWA and state and local agencies responsible for transportation planning and air quality management.

The Albuquerque Metropolitan Area is the only region in New Mexico where CO standards were exceeded in the 1980s and early 1990s, and that was subject to transportation-related air quality nonattainment status. Throughout recent decades, the Albuquerque Metropolitan Planning Organization and the City of Albuquerque EHD Air Quality Division have developed and implemented regional transportation conformity plans with measures to control and reduce CO emissions.

Since the last violation of the Federal 8-hour CO standard in 1991, area CO levels have been steadily in decline. The current levels measure less than half the NAAQS standard. The county is now designated as "limited maintenance" because it has been in attainment for more than ten years. The region is currently subject to the federally-approved LMP, which is a maintenance plan that meets EPA's criteria and achieves pollutant levels that are significantly below the NAAQS standard.

In its LMP, Albuquerque and Bernalillo County must demonstrate that the average of the values measured at each CO monitor has not exceeded 85% of the NAAQS for CO. The values corresponding to 85% of the NAAQS are 29.8 parts per million (ppm) for the 1-hour standard (.85 x 35 ppm = 29.8 ppm) and 7.7 ppm for the 8-hour standard (.85 x 9.0 ppm = 7.7 ppm). The values are based upon the second highest readings for the most recent two years of data.

3. AIR QUALITY MONITORING DATA

The City of Albuquerque operates several ambient air quality monitoring sites in Bernalillo County, and the measurements at these sites are used to demonstrate that the region is in compliance with the NAAQS. The ambient concentration of CO has steadily decreased since the 1990s and has stabilized. The maximum 1-hour and 8-hour CO concentrations from 2008 through 2012 at the CO monitoring sites were obtained from the City of Albuquerque, and are summarized in Table 2. The monitor at 201 Prosperity SE, just south of Rio Bravo Boulevard, is closest to the project area. The table shows that CO concentrations are considerably lower than the 1-hour NAAQS of 35 ppm and the LMP value of 29.8 ppm and that the levels are lower than the 8-hour NAAQS of 9 ppm and the LMP value of 7.7 ppm.

The data also show that generally there is a relatively small variation across the urban area in background CO levels. The Prosperity site is very close to the average 1-hour CO level of all the monitors and slightly above the average 8-hour level in comparison to the monitors across the county. Over the five year period between 2008 and 2012, 1-hour CO levels were highest in 2009 (about 10 percent of the NAAQS) at the Prosperity site and have since declined. The 8-hour levels were highest in 2010 (29 percent of the NAAQS) and have also since declined.

Table 2. Five Years of Monitoring Data for Carbon Monoxide

1-Hour	2421 Mesilla NE	4700a San Mateo NE	6000 Anderson SE	2200 San Pedro NE	201 Prosperity SE	9819a Second NW	10155 Coors NW
2012	N/A	2.3	N/A	3.6	2.3	1.6	N/A
2011	N/A	1.7	N/A	3.1	2.3	2.1	N/A
2010	2	1.9	N/A	2.9	3.4	2.4	N/A
2009	2.9	1.6	N/A	2.5	3.7	2.1	N/A
2008	4.6	2.2	2.8	3	3.1	2.1	4.9
Average	**3.17**	**1.94**	**2.8**	**3.02**	**2.96**	**2.06**	**4.9**

8-Hour	2421 Mesilla NE	4700a San Mateo NE	6000 Anderson SE	2200 San Pedro NE	201 Prosperity SE	9819a Second NW	10155 Coors NW
2012	N/A	2	N/A	2.2	1.2	1.3	N/A
2011	N/A	1.3	N/A	2.2	1.5	1.5	N/A
2010	1.4	1	N/A	2	2.6	1.7	N/A
2009	1.7	1.1	N/A	N/A	2.4	1.6	N/A
2008	2.6	1.2	1.5	2.3	2	1.4	1.3
Average			**1.5**	**2.12**	**1.94**	**1.5**	**1.3**

Note: N/A = not applicable

4. AIR QUALITY ANALYSIS METHODOLOGY

Computer models were used to estimate the concentrations of CO in the project vicinity. The modeling process includes predictions of CO emission rates for the mix of vehicles at given speeds during the 2035 study year and analysis of CO dispersion from the street network, resulting in CO concentrations at identified receptors. Receptors are sites near the street where members of the public may be vulnerable to CO exposure. Each of the scenarios was evaluated using the EPA's MOVES2014 emissions model and the CAL3QHC air quality dispersion model.

The inputs to the MOVES2014 model were based on EPA default model data and local air quality information developed in conjunction with the EHD Air Quality Division staff. Local data included meteorological conditions (average temperature and humidity in January), the age distribution and composition of the vehicle fleet, and information on the EHD's vehicle inspection and maintenance

program. As recommended in EPA guidance material (EPA 2015), the default MOVES2014 fuel information was used for the analysis.

Emission rates were developed from MOVES2014 for free flow and idle conditions on roadway links for each of three intersections analyzed. Traffic volumes and grades for the build and no-build scenarios were taken from the AECOM traffic report (URS 2013). An estimated average operating speed of 40 miles per hour (mph) was used to generate emission rates for free flowing traffic. The Northbound I-25/Sunport Ramps and Southbound I-25/Sunport Ramps were characterized as Urban Restricted Access facilities and the Broadway/Sunport Intersection was characterized as an Urban Unrestricted Access facility. To provide a conservative analysis, the highest free flow link emission rates for each intersection were used in the dispersion modeling. The idle emission rate was the same in all cases. Exhibit 1 contains the MOVES2014 output emission factor data for each intersection.

To model CO dispersion, the EPA-approved CAL3QHC model was used. This model relies on assumptions about worst-case meteorological, site, and traffic conditions. It produces hourly CO concentrations at specific receptor locations. For this project, 60 receptors were sited in the project area, with 20 at each signalized intersection. The receptors were located according to the criteria in the *Guidelines for Modeling Carbon Monoxide from Roadway Intersections* (EPA, 1992) and EHD recommendations. The traffic data from the AECOM traffic report (URS 2013) (summarized in Exhibit 2) were used to provide information on volumes and operational characteristics for the affected intersections. Additional information for each modeled intersection and the output data from CAL3QHC are included in Exhibit 3. CAL3QHC performs a wind angle search in 5-degree increments to determine which angles will produce the worst-case CO concentrations at the receptors. Other meteorological assumptions include one meter-per-second wind speed, Class D atmospheric stability classification, and a mixing height of 1000 meters.

The background CO level, derived from local monitoring data, and persistence factor, a conservative value initiated by the EHD to convert between 1-hour and 8-hour CO levels, were used in the analysis are as follows:

One-hour background CO level of 3.0 parts per million (ppm)
0.75 persistence factor to convert between 1-hour and 8-hour CO values

5. Conclusions of the Modeling

The results from the CAL3QHC modeling are summarized in Tables 3 through 5 for the three intersections. The modeled results are evaluated in relation to the NAAQS (9.0 ppm over eight-hours and 35.0 ppm during the worst one-hour period) and the LMP standards (7.7 ppm for the 8-hour period and 29.8 ppm for the 1-hour period). All of the modeled results are well below the NAAQS and change very little as a result of the proposed project improvements; therefore, the conclusion of this report is that the proposed Sunport Extension project will not cause or contribute to CO exceedances of the NAAQS.

Table 3. Northbound I-25 Ramps and Sunport Carbon Monoxide Levels*

Receptor #	2035 P.M. Peak Hour Volumes					
	No Build (NB)		Build (B)		Change	
	1-Hr	8-Hr	1-Hr	8-Hr	1-Hr	8-Hr
1	3.3	2.5	3.4	2.6	0.1	0.1
2	3.4	2.6	3.5	2.6	0.1	0.0
3	3.3	2.5	3.5	2.6	0.2	0.1
4	3.5	2.6	3.6	2.7	0.1	0.1
5	3.1	2.3	3.2	2.4	0.1	0.1
6	3.2	2.4	3.2	2.4	0.0	0.0
7	3.4	2.6	3.4	2.6	0.0	0.0
8	3.3	2.5	3.4	2.6	0.1	0.1
9	3.2	2.4	3.3	2.5	0.1	0.1
10	3.3	2.5	3.3	2.5	0.0	0.0
11	3.3	2.5	3.4	2.6	0.1	0.1
12	3.2	2.4	3.4	2.6	0.2	0.2
13	3.1	2.3	3.2	2.4	0.1	0.1
14	3.0	2.3	3.2	2.4	0.2	0.1
15	3.4	2.6	3.3	2.5	-0.1	-0.1
16	3.3	2.5	3.3	2.5	0.0	0.0
17	3.2	2.4	3.2	2.4	0.0	0.0
18	3.2	2.4	3.3	2.5	0.1	0.1
19	3.3	2.5	3.4	2.6	0.1	0.1
20	3.1	2.3	3.4	2.6	0.3	0.3
Average	**3.3**	**2.5**	**3.3**	**2.5**	**0.1**	**0.1**

* All concentrations are in ppm.

** 1-Hour background level is 3.00 ppm.

*** 8-Hour values are calculated by multiplying 1-hour values by a persistence factor of 0.75.

Table 4. Southbound I-25 and Sunport Blvd Carbon Monoxide Levels*

Receptor #	2035 P.M. Peak-Hour Volumes					
	No Build (NB)		Build (B)		Change	
	1-Hr	8-Hr	1-Hr	8-Hr	1-Hr	8-Hr
1	3.3	2.5	3.3	2.5	0.0	0.0
2	3.2	2.4	3.3	2.5	0.1	0.1
3	3.2	2.4	3.3	2.5	0.1	0.1
4	3.3	2.5	3.4	2.6	0.1	0.1
5	3.2	2.4	3.1	2.3	-0.1	-0.1
6	3.2	2.4	3.1	2.3	-0.1	-0.1
7	3.2	2.4	3.2	2.4	0.0	0.0
8	3.2	2.4	3.3	2.5	0.1	0.1
9	3.2	2.4	3.3	2.5	0.1	0.1
10	3.1	2.3	3.1	2.3	0.0	0.0
11	3.2	2.4	3.3	2.5	0.1	0.1
12	3.2	2.4	3.3	2.5	0.1	0.1
13	3.1	2.3	3.1	2.3	0.0	0.0
14	3.1	2.3	3.1	2.3	0.0	0.0
15	3.2	2.4	3.2	2.4	0.0	0.0
16	3.2	2.4	3.3	2.5	0.1	0.1
17	3.1	2.3	3.1	2.3	0.0	0.0
18	3.1	2.3	3.1	2.3	0.0	0.0
19	3.2	2.4	3.3	2.5	0.1	0.1
20	3.2	2.4	3.2	2.4	0.0	0.0
Average	**3.2**	**2.4**	**3.2**	**2.4**	**0.0**	**0.0**

* All concentrations are in ppm.

** 1-Hour background level is 3.00 ppm.

*** 8-Hour values are calculated by multiplying 1-hour values by a persistence factor of 0.75.

Table 5. Broadway Boulevard and Sunport Boulevard Carbon Monoxide Levels*

Receptor #	2035 P.M. Peak Hour Volumes					
	No Build (NB)		Build (B)		Change	
	1-Hr	8-Hr	1-Hr	8-Hr	1-Hr	8-Hr
1	3.4	2.6	3.5	2.6	0.1	0.0
2	3.3	2.5	3.3	2.5	0.0	0.0
3	3.4	2.6	3.5	2.6	0.1	0.0
4	3.4	2.6	3.5	2.6	0.1	0.0
5	3.4	2.6	3.5	2.6	0.1	0.0
6	3.3	2.5	3.3	2.5	0.0	0.0
7	3.2	2.4	3.3	2.5	0.1	0.1
8	3.2	2.4	3.3	2.5	0.1	0.1
9	3.3	2.5	3.4	2.6	0.1	0.1
10	3.3	2.5	3.3	2.5	0.0	0.0
11	3.2	2.4	3.2	2.4	0.0	0.0
12	3.1	2.3	3.2	2.4	0.1	0.1
13	3.3	2.5	3.5	2.6	0.2	0.1
14	3.3	2.5	3.3	2.5	0.0	0.0
15	3.1	2.3	3.2	2.4	0.1	0.1
16	3.1	2.3	3.3	2.5	0.2	0.2
17	3.3	2.5	3.3	2.5	0.0	0.0
18	3.3	2.5	3.3	2.5	0.0	0.0
19	3.1	2.3	3.2	2.4	0.1	0.1
20	3.1	2.3	3.1	2.3	0.0	0.0
Average	**3.3**	**2.5**	**3.3**	**2.5**	**0.1**	**0.0**

* All concentrations are in ppm.

** 1-Hour background level is3.00 ppm.

*** 8-Hour values are calculated by multiplying 1-hour values by a persistence factor of: 0.75.

6. REGIONAL TRAVEL DATA

The Mid-Region Council of Governments' (MRCOG's) developed traffic forecasts for the Sunport Extension project for the years 2015 and 2035. The forecasts provide information about the effects of the Sunport project on traffic volumes on individual links in the street system and the operation of the network within a defined subarea. Figure 2 (Subarea Traffic Data, Source: Mid Region Council of Governments) indicates the effects of the project on the highlighted subarea of the street network. Values are given for total VMT, vehicle hours of travel (VHT), and average speed for the AM peak period, off peak period, PM peak period, and daily period. The subarea analysis includes the build and no build condition for 2015 and 2035. In the 2035 AM forecast, VMT and VHT decrease in the build scenario and average speed increases, indicating that the system is operating more efficiently during the AM peak. In the off peak, PM peak, and daily periods, however, VMT and VHT increase and average speed decreases with the project. The higher VMT (3,516 vehicles per day [vpd] in 2015 and 11,752 vpd in 2035) suggests slight increases in CO emissions in the subarea. The change in speed is negligible in terms of emissions.

Sunport Blvd Interchange, 2035 MTP, Subarea Analysis:
(Subarea defined as below)

	AM PP			OP			PM PP			Daily		
	VMT	VHT	Speed	VMT	VHT	Speed	VMT	VHT	Speed	VMT	VHT	Speed
s15 BD	109725	3255	33.71	289300	6197	46.68	135358	3841	35.24	534383	13293	40.20
s15 NB	108998	3289	33.14	287274	6036	47.59	134595	3784	35.57	530867	13109	40.50
s35 BD	162396	13579	11.96	511759	14616	35.01	209954	17144	12.25	884109	45339	19.50
s35 NB	163457	13814	11.83	503939	14317	35.20	204961	16220	12.64	872357	44351	19.67

(Source: Mid Region Council of Governments)

Figure 2. Subarea Traffic Statistics

The MRCOG forecasts also show that traffic patterns will change as a result of the project. Volumes will increase on Woodward Road (Woodward), west of Broadway (+6,515 vehicles); on Second Street (Second), south of Woodward (+4,895 vehicles); and on the new Sunport Extension (+14,480 vehicles). Conversely, traffic will decrease on Broadway between Woodward and Gibson Boulevard (Gibson) (-5,368 vehicles); on Gibson between Broadway and I-25 (-2,019 vehicles); and on Second north of Woodward (-689 vehicles). More traffic will utilize south Second and Broadway to get to I-25 by way of Woodward and the Sunport Extension. This traffic will be diverted away from the more congested and populated areas along Broadway and Second, between Woodward and Gibson, and from Gibson and the Gibson/I-25 interchange.

7. OTHER POLLUTANTS

CO is considered to be the primary transportation related pollutant; however, NO_2 (an O_3 precursor), particulates (PM-10 and PM-2.5), and certain air toxics are also emitted by vehicles. The entire metropolitan area has experienced high levels of O_3 during summer months, although currently it is an attainment area for O_3 and levels have been trending downward during the past year. High particulate level events have also occurred around the urban area, often related to factors such as high winds, regional forest fires, and local wood burning. Although transportation projects contribute emissions, the region has historically been in attainment for these pollutants and project-specific transportation control measures have not been established.

The SIP (Albuquerque-Bernalillo County Air Quality Control Board, 2010) contains elements that address O_3, PM-10, PM-2.5, and NO_2, including measures such as enforceable limitations on vehicle emissions through the inspection and maintenance program, mandatory air quality monitoring and data analysis, and stationary source permitting. The MRCOG's Long Range Metropolitan Transportation Plan (MTP) (2015) also includes a conformity analysis designed to mitigate congestion and air pollution. The Sunport Extension project is included in the current MTP.

Mobile source air toxics (MSATs) are compounds emitted from highway vehicles and nonroad equipment which are known or suspected to cause cancer and irritation to the respiratory tract, including the exacerbation of asthma. Controlling air toxic emissions became a national priority with the passage of the CAA, whereby Congress mandated that the EPA regulate 188 air toxics. The EPA has assessed this expansive list and identified seven compounds with significant contributions from mobile sources. These are acrolein, benzene, 1,3-butidiene, diesel particulate matter plus diesel exhaust organic gases (diesel PM), formaldehyde, naphthalene, and polycyclic organic matter.

The FHWA has developed a tiered approach with three categories for analyzing MSAT in NEPA documents, depending on specific project circumstances (Interim Guidance Update on Mobile Source Air Toxic Analysis in NEPA, 2012). The three categories include:

- No analysis for projects with no potential for meaningful MSAT effects;
- Qualitative analysis for projects with low potential MSAT effects; or

- Quantitative analysis to differentiate alternatives for projects with higher potential MSAT effects.

The Sunport Extension project is considered to be a project with low potential MSAT effects, requiring a qualitative assessment of MSAT emissions. The types of projects included in this category are minor widening projects, new interchanges, replacing a signalized intersection on a surface street, new roadway segments connecting to an existing limited access highway, or projects where design year traffic is projected to be less than 140,000 to 150,000 annual average daily traffic. A qualitative analysis provides a basis for identifying and comparing the potential differences among MSAT emissions, if any, from the various alternatives.

For each alternative in the Sunport Extension project, the amount of MSAT emitted would be proportional to the vehicle miles traveled, or VMT, assuming that other variables such as fleet mix are the same for each alternative. The MRCOG traffic forecasts, as already described, show that VMT decreases in the 2035 AM peak build scenario, indicating that the system will operate more efficiently during the AM peak and fewer MSAT and other emissions will occur. In the off peak, PM peak, and daily periods, however, VMT increases slightly with the project. Overall, the higher VMT (about 0.6 percent in 2015 and 1.3 percent in 2035) suggests slight increases in MSAT emissions in the subarea.

According to the FHWA, MSAT emissions will likely be lower than present levels in the design year as a result of EPA's national control programs that are projected to reduce annual MSAT emissions by over 80 percent from 2010 to 2050 (2012). Local conditions may differ from these national projections in terms of fleet mix and turnover, VMT growth rates, and local control measures. However, the magnitude of the EPA-projected reductions is so great (even after accounting for VMT growth) that MSAT emissions in the study area are likely to be lower in the future in virtually all locations.

Under the build and no-build scenarios, the MRCOG forecasts show that traffic patterns will change as a result of the project. More traffic will utilize south Second and Broadway to get to I-25 by way of Woodward and the Sunport Extension. This traffic will be diverted away from the more populated areas along Broadway and Second, between Woodward and Gibson, and from Gibson and the Gibson/I-25 interchange, thus emissions will likely decrease in these areas. However, even where increases do occur, they will be substantially reduced in the future due to implementation of EPA's vehicle and fuel regulations.

In compliance with the Council on Environmental Quality (CEQ) regulations (40 CFR 1502.22[b]), it must be disclosed that air toxics analysis is a continuing area of research. While much work has been done to assess the overall health risk of air toxics, many questions remain unanswered. In particular, the tools and techniques for assessing project-specific health outcomes as a result of lifetime MSAT exposure remain limited.

8. CONCLUSIONS

The preceding analysis of CO supports the conclusion that transportation related emissions from the proposed project are not a significant factor affecting NAAQS exceedances. The hot spot analysis shows that CO levels will be well below the NAAQS and LMP standards, even directly adjacent to the intersections with the highest 2035 projected traffic volumes. Monitoring data show that CO levels are generally declining in the region due to improved emissions technology in the fleet of vehicles. Although total VMT will increase in the subarea, much of this travel will be shifted to the south of Woodward to take advantage of the improved access to I-25 from the Sunport Extension. The anticipated improvements to vehicle emissions show modeled air quality degradation to be negligible despite anticipated increases in traffic volumes.

The Albuquerque-Bernalillo County Air Quality Control Board's SIP (2010) and MRCOG's MTP (2015) contain measures designed to reduce and control air pollution and address O_3, PM-10, PM-2.5, and NO_2. Consequently, the region has historically been in attainment for these pollutants and project-specific transportation control measures have not been established. The proposed project is not anticipated to result in exceedance of the NAAQS for these criteria pollutants.

Although the MRCOG forecasts suggest slightly higher VMT in the subarea around the proposed project, the magnitude of the EPA-projected MSAT reductions are so great that MSAT emissions in the study area are likely to be lower in the future. EPA's national control programs are projected to reduce annual MSAT emissions by over 80 percent from 2010 to 2050 (FHWA 2012).

9. REFERENCES

Albuquerque-Bernalillo County Air Quality Control Board. 2010. State Implementation Plan for Air Quality.

Albuquerque Environmental Health Department: Air Quality Division: Control Strategies Section. 2004. State Implementation Plan Revision: Limited Maintenance Plan for Carbon Monoxide: Albuquerque/Bernalillo County, New Mexico.

Environmental Protection Agency (EPA) 1992. Guideline for Modeling Carbon Monoxide from Roadway Intersections. EPA-454/R-92-005.

EPA 2014. MOVES (Motor Vehicle Emission Simulator). Available online at: www.epa.gov/otaq/models/moves/

EPA 2015. Using MOVES2014 in Project Level Carbon Monoxide Analyses, EPA-420-B-15-028. Available online at: www.epa.gov/otaq/models/moves/

Federal Highway Administration (FHWA). 2012. Interim Guidance Update on Mobile Source Air Toxic Analysis in NEPA. Available online at:

(http://www.fhwa.dot.gov/environment/air_quality/air_toxics/policy_and_guidance/aqintguidmem.cfm).

Mid-Region Council of Governments (MRCOG). 2015. Futures 2040 MTP.

NMDOT. 2014. Statewide Transportation Improvement Program (STIP): FY 14-FY 17, Amendment 8, Santa Fe, NM. New Mexico Department of Transportation. 2014.

URS Corporation 2013. Sunport Boulevard Extension: Interchange Modification Report, prepared for Bernalillo County Public Works Division.

Exhibit 1 – MOVES2014 Output Data

Table 6. 2035 MOVES2014 Output: Northbound I-25/Sunport Ramps

movesRun Id	Year Id	Month Id	Day Id	Hour Id	Link Id	Pollutant	GramsPerVeh-Mile	GramsPerVeh-Hour
3	2035	1	5	9	1	CO	1.486232107	0
3	2035	1	5	9	2	CO	1.486232107	0
3	2035	1	5	9	3	CO	1.026313354	0
3	2035	1	5	9	4	CO	1.026313713	0
3	2035	1	5	9	5	CO	1.026312315	0
3	2035	1	5	9	6	CO	1.026315088	0
3	2035	1	5	9	7	CO	0	4.220450544
3	2035	1	5	9	8	CO	0	4.220446255
3	2035	1	5	9	9	CO	0	4.220446296

Table 7. 2035 MOVES2014 Output: Southbound I-25/Sunport Ramps

movesRun Id	Year Id	Month Id	Day Id	Hour Id	Link Id	Pollutant	GramsPerVeh-Mile	GramsPerVeh-Hour
6	2035	1	5	9	1	CO	1.486232107	0
6	2035	1	5	9	2	CO	1.486232107	0
6	2035	1	5	9	3	CO	2.138762352	0
6	2035	1	5	9	4	CO	1.026313713	0
6	2035	1	5	9	5	CO	1.026312315	0
6	2035	1	5	9	6	CO	1.026315088	0
6	2035	1	5	9	7	CO	0	4.220450544
6	2035	1	5	9	8	CO	0	4.220446255
6	2035	1	5	9	9	CO	0	4.220446296

Table 8. 2035 MOVES2014 Output: Broadway/Sunport

movesRun Id	Year Id	Month Id	Day Id	Hour Id	Link Id	Pollutant	GramsPerVeh-Mile	GramsPerVeh-Hour
5	2035	1	5	9	1	CO	1.034539846	0
5	2035	1	5	9	2	CO	1.034539846	0
5	2035	1	5	9	3	CO	1.034540569	0
5	2035	1	5	9	4	CO	1.034541624	0
5	2035	1	5	9	5	CO	1.034538893	0
5	2035	1	5	9	6	CO	1.034539533	0
5	2035	1	5	9	7	CO	1.034541996	0
5	2035	1	5	9	8	CO	1.034541246	0
5	2035	1	5	9	9	CO	0	4.220449703
5	2035	1	5	9	10	CO	0	4.220455408
5	2035	1	5	9	11	CO	0	4.220449703
5	2035	1	5	9	12	CO	0	4.22045256

Exhibit 2 – Traffic Data

2035 PM No Build

Northbound I-25 Ramps and Sunport

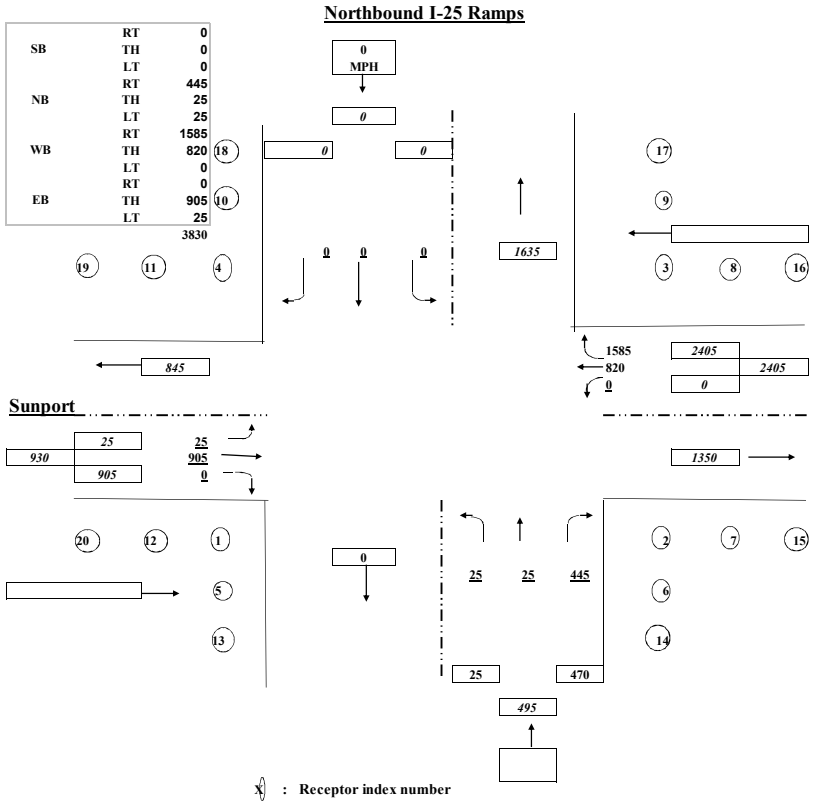

X : Receptor index number

: Approaching speed

C:\data\air\sunport\Round2\1 Sunport-NorthBi25\[15.xls]A

INTERSECTION CONFIGURATION , SIGNAL SETTING, AND EMISSION FACTOR

	EBL	EBT	EBR	WBL	WBT	WBR	NBL	NBT	NBR	SBL	SBT	SBR
LeftTurn Code*	1			1			2			2		
No. of Lanes	1	2	0	0	1	2	0	1	1	0	0	0
Lane Width (ft)	12	12	12	12	12	12	12	12	12	12	12	12
Median (ft)		4			4			0			0	
Offset Receptors and Lanes		0			0			0			0	
Cycle Length (sec)	110	110	110	110	110	110	110	110	110	110	110	110
1st Permitted Phase (inc yellow)	14.5	89.5		0	75	75	20.5	20.5	20.5	0	0	
2nd Permitted Phase (inc yellow)												
3rd Permitted Phase (inc yellow)												
Red Time (sec)	95.5	20.5	NA	NA	35.0	35.0	NA	89.5	89.5	NA	NA	NA
Lost Time (Incld'd. above)	4.5	4.5	NA	NA	4.5	4.5	NA	4.5	4.5	NA	NA	NA
Saturation Flow Rate (vphpl)	1900	1900	NA	NA	1900	1900	NA	1900	1900	NA	NA	NA
Speed (mph)	0			NA			NA			NA		

* Left Turn Code : 1 - Exclusive left 2 - Left shared with through (IF 2 WBL should not be counted as a lane i.e. all LT lanes should be tallied under through)

Quee Links 800
Freeflow Links 1000

CALCULATION OF RECEPTOR'S COORDINATES

	COORDINATES			
RECEPTOR	X	Y	X	Y
#1			-16	-48
#2			46	-42
#3			28	54
#4			-16	36
#5			-16	-128
#6			46	-122
#7			126	-42
#8			108	54
#9			28	134
#10			-16	116
#11			-96	36
#12			-96	-48
#13			-16	-248
#14			46	-242
#15			246	-42
#16			228	54
#17			28	254
#18			-16	236
#19			-216	36
#20			-216	-48

Number of Links 13

CALCULATION OF LINK COORDINATES (w/ widths and lanes)

LINK	X1	Y1	X2	Y2	Width	Lanes
EB Approach	-1000	-20	0	-20	44	2
EB Departure	0	-14	1000	-14	44	2
EB Left	-1000	-2	0	-2	32	1
WB Approach	1000	8	0	8	56	3
WB Departure	0	14	-1000	14	32	1
WB Left	1000	2	0	2	20	0
NB Approach	12	-1000	12	0	44	2
NB Departure	6	0	6	1000	32	1
NB Left	shared	shared	shared	shared	shared	shared
SB Approach	0	1000	0	0	20	0
SB Departure	0	0	0	-1000	20	0
SB Left	shared	shared	shared	shared	shared	shared
EB Left Queue	-6	-2	-806	-2	12	1
EB Through Queue	-6	-20	-806	-20	24	2
EB Right Queue	shared	shared	shared	shared	0	0
WB Left Queue	18	2	818	2	0	0
WB Through Queu	18	8	818	8	12	1
WB Right Queue	18	26	818	26	24	2
NB Left Queue	shared	shared	shared	-800	0	0
NB Through Queue	12	-32	12	-832	12	1
NB Right Queue	24	-32	24	-832	12	1
SB Left Queue	shared	shared	shared	800	0	0
SB Through Queue	0	26	0	826	0	0
SB Right Queue	shared	shared	shared	shared	0	0

2035 PM Build

Northbound I-25 Ramps and Sunport

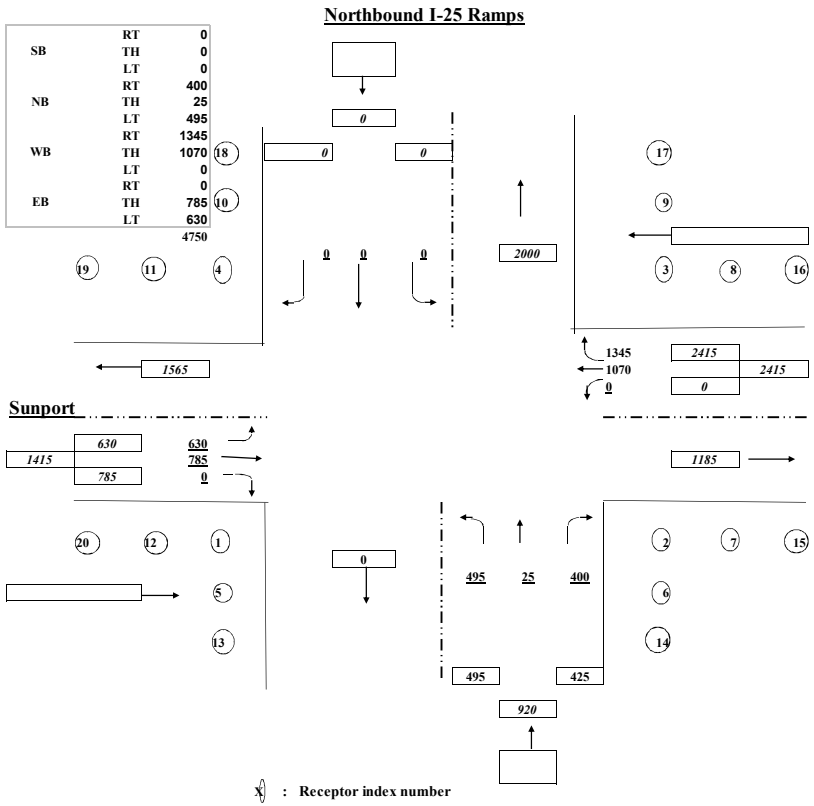

X : Receptor index number

: Approaching speed

C:\data\air\sunport\Round2\1 Sunport-NorthBi25\[16.xls]A

INTERSECTION CONFIGURATION , SIGNAL SETTING, AND EMISSION FACTOR

	EBL	EBT	EBR	WBL	WBT	WBR	NBL	NBT	NBR	SBL	SBT	SBR
LeftTurn Code*	1			1			2			2		
No. of Lanes	2	2	0	0	3	1	0	1	1	0	0	0
Lane Width (ft)	12	12	12	12	12	12	12	12	12	12	12	12
Median (ft)		4			4			0			0	
Offset Receptors and Lanes		0			0			0			0	
Cycle Length (sec)	110	110	110	110	110	110	110	110	110	110	110	110
1st Permitted Phase (inc yellow)	25.4	72.8		0	47.4	47.4	37.2	37.2		0	0	
2nd Permitted Phase (inc yellow)												
3rd Permitted Phase (inc yellow)												
Red Time (sec)	84.6	37.2	NA	NA	62.6	62.6	NA	72.8	110.0	NA	NA	NA
Lost Time (Incld'd. above)	4.5	4.5	NA	NA	4.5	4.5	NA	4.5	4.5	NA	NA	NA
Saturation Flow Rate (vphpl)	1900	1900	NA	NA	1900	1900	NA	1900	1900	NA	NA	NA
Speed (mph)	0			NA			NA			NA		

* Left Turn Code : 1 - Exclusive left 2 - Left shared with through (IF 2 WBL should not be counted as a lane i.e. all LT lanes should be tallied under through)

Quee Links 800
Freeflow Links 1000

CALCULATION OF RECEPTOR'S COORDINATES

	COORDINATES			
RECEPTOR	X	Y	X	Y
#1			-16	-54
#2			46	-42
#3			28	66
#4			-16	66
#5			-16	-134
#6			46	-122
#7			126	-42
#8			108	66
#9			28	146
#10			-16	146
#11			-96	66
#12			-96	-54
#13			-16	-254
#14			46	-242
#15			246	-42
#16			228	66
#17			28	266
#18			-16	266
#19			-216	66
#20			-216	-54

Number of Links 13

CALCULATION OF LINK COORDINATES (w/ widths and lanes)

LINK	X1	Y1	X2	Y2	Width	Lanes
EB Approach	-1000	-26	0	-26	44	2
EB Departure	0	-14	1000	-14	44	2
EB Left	-1000	-2	0	-2	44	2
WB Approach	1000	20	0	20	68	4
WB Departure	0	32	-1000	32	56	3
WB Left	1000	2	0	2	20	0
NB Approach	12	-1000	12	0	44	2
NB Departure	6	0	6	1000	32	1
NB Left	shared	shared	shared	shared	shared	shared
SB Approach	0	1000	0	0	20	0
SB Departure	0	0	0	-1000	20	0
SB Left	shared	shared	shared	shared	shared	shared
EB Left Queue	-6	-2	-806	-2	24	2
EB Through Queue	-6	-26	-806	-26	24	2
EB Right Queue	shared	shared	shared	shared	0	0
WB Left Queue	18	2	818	2	0	0
WB Through Queu	18	20	818	20	36	3
WB Right Queue	18	44	818	44	12	1
NB Left Queue	shared	shared	shared	-800	0	0
NB Through Queue	12	-32	12	-832	12	1
NB Right Queue	24	-32	24	-832	12	1
SB Left Queue	shared	shared	shared	800	0	0
SB Through Queue	0	56	0	856	0	0
SB Right Queue	shared	shared	shared	shared	0	0

2035 PM No Build

Southbound I-25 and Sunport Blvd

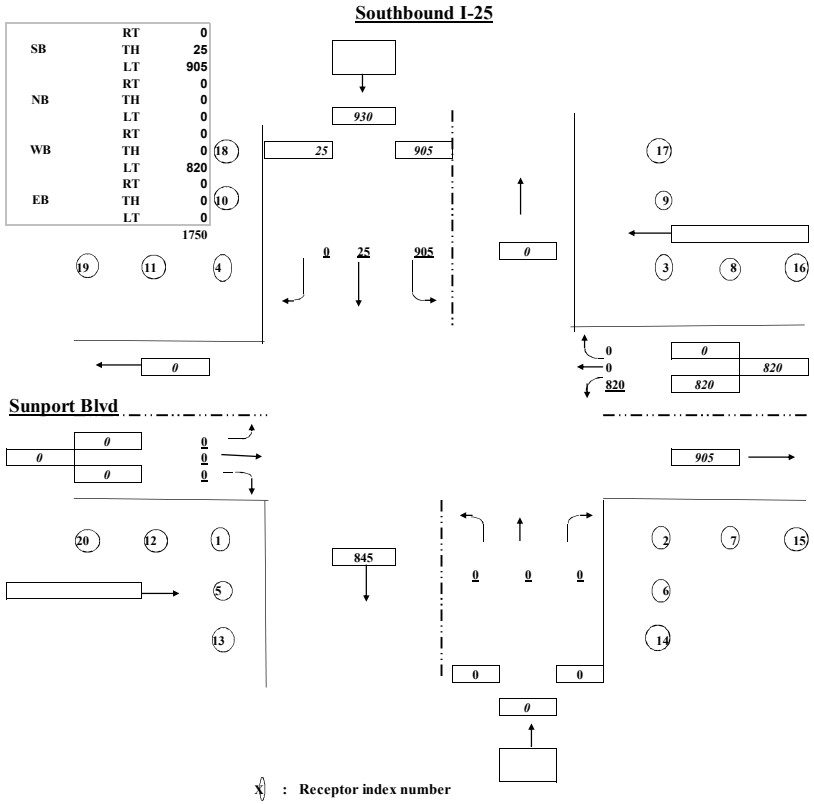

X : Receptor index number

: Approaching speed

C:\data\air\sunport\Round2\2 Sunport-SouthBi25\[25.XLS]A

INTERSECTION CONFIGURATION , SIGNAL SETTING, AND EMISSION FACTOR

	EBL	EBT	EBR	WBL	WBT	WBR	NBL	NBT	NBR	SBL	SBT	SBR
LeftTurn Code*	2			1			2			1		
No. of Lanes	0	0	0	1	1	0	0	0	0	1	1	0
Lane Width (ft)	12	12	12	12	12	12	12	12	12	12	12	12
Median (ft)		4			4			0			0	
Offset Receptors and Lanes		0			0			0			0	
Cycle Length (sec)	110	110	110	110	110	110	110	110	110	110	110	110
1st Permitted Phase (inc yellow)	0	0	0	67	67	0	0	0	0	43	43	46
2nd Permitted Phase (inc yellow)												
3rd Permitted Phase (inc yellow)												
Red Time (sec)	NA	NA	NA	43.0	43.0	NA	NA	NA	NA	67.0	67.0	NA
Lost Time (Incld'd. above)	NA	NA	NA	4.5	4.5	NA	NA	NA	NA	4.5	4.5	4.5
Saturation Flow Rate (vphpl)	1900	NA	NA	1900	1900	NA	NA	NA	NA	1900	1900	NA
Speed (mph)					0			NA			0	

* Left Turn Code : 1 - Exclusive left 2 - Left shared with through (IF 2 WBL should not be counted as a lane i.e. all LT lanes should be tallied under through)

Quee Links 800
Freeflow Links 1000

CALCULATION OF RECEPTOR'S COORDINATES

	COORDINATES			
RECEPTOR	X	Y	X	Y
#1			-28	-18
#2			16	-24
#3			22	36
#4			-34	30
#5			-28	-98
#6			16	-104
#7			96	-24
#8			102	36
#9			22	116
#10			-34	110
#11			-114	30
#12			-108	-18
#13			-28	-218
#14			16	-224
#15			216	-24
#16			222	36
#17			22	236
#18			-34	230
#19			-234	30
#20			-228	-18

Number of Links 10

CALCULATION OF LINK COORDINATES (w/ widths and lanes)

LINK	X1	Y1	X2	Y2	Width	Lanes
EB Approach	-1000	-2	0	-2	20	0
EB Departure	0	-8	1000	-8	20	0
EB Left	shared	shared	shared	shared	shared	shared
WB Approach	1000	14	0	14	32	1
WB Departure	0	8	-1000	8	32	1
WB Left	1000	2	0	2	32	1
NB Approach	0	-1000	0	0	20	0
NB Departure	6	0	6	1000	20	0
NB Left	shared	shared	shared	shared	shared	shared
SB Approach	-12	1000	-12	0	32	1
SB Departure	-6	0	-6	-1000	32	1
SB Left	0	1000	0	0	32	1
EB Left Queue	shared	shared	shared	shared	0	0
EB Through Queue	-18	-2	-818	-2	0	0
EB Right Queue	shared	shared	shared	shared	0	0
WB Left Queue	12	2	812	2	12	1
WB Through Queu	12	14	812	14	12	1
WB Right Queue	shared	shared	800	shared	0	0
NB Left Queue	shared	shared	shared	-800	0	0
NB Through Queue	0	-14	0	-814	0	0
NB Right Queue	shared	shared	shared	shared	0	0
SB Left Queue	0	20	0	820	12	1
SB Through Queue	-12	20	-12	820	12	1
SB Right Queue	shared	shared	shared	shared	0	0

2035 PM Build

Southbound I-25 and Sunport Blvd

SB	RT	395
	TH	25
	LT	790
NB	RT	0
	TH	0
	LT	0
WB	RT	0
	TH	1205
	LT	385
EB	RT	195
	TH	610
	LT	0
		3605

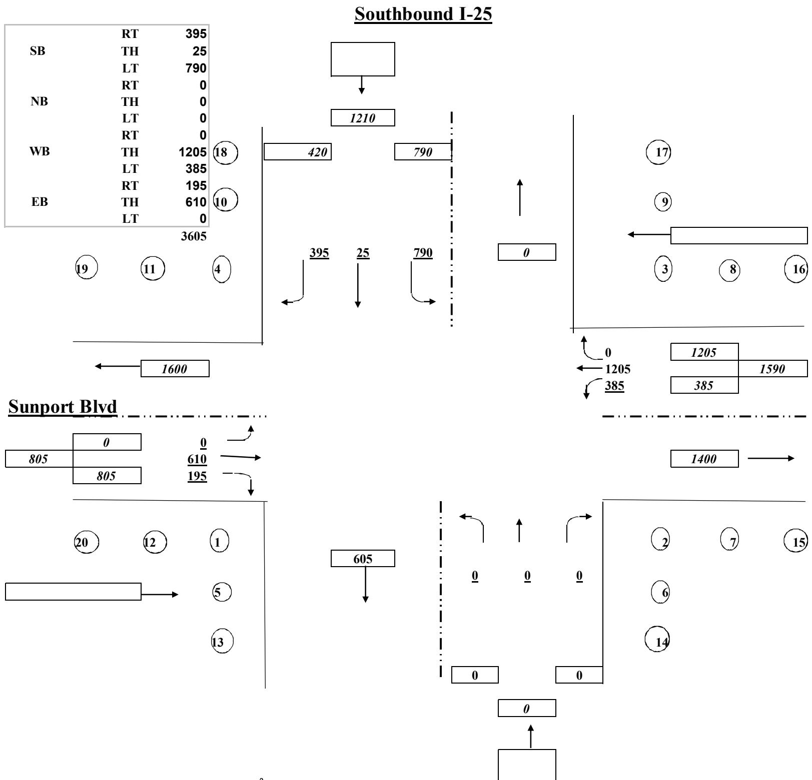

X : Receptor index number

▭ : Approaching speed

C:\data\air\sunport\Round2\2 Sunport-SouthBi25\[26.XLS]A

#

#

INTERSECTION CONFIGURATION , SIGNAL SETTING, AND EMISSION FACTOR

	EBL	EBT	EBR	WBL	WBT	WBR	NBL	NBT	NBR	SBL	SBT	SBR
LeftTurn Code*	1			1			1			1		
No. of Lanes	0	3	1	2	2	0	0	0	0	2	1	1
Lane Width (ft)	12	12	12	12	12	12	12	12	12	12	12	12
Median (ft)		4			4			0			0	
Offset Receptors and Lanes		0			0			0			0	
Cycle Length (sec)	110	110	110	110	110	110	110	110	110	110	110	110
1st Permitted Phase (inc yellow)	0	47	47	17	64	0	0	0	0	46	46	46
2nd Permitted Phase (inc yellow)												
3rd Permitted Phase (inc yellow)												
Red Time (sec)	NA	63.0	63.0	93.0	46.0	NA	NA	NA	NA	64.0	64.0	64.0
Lost Time (Incld'd. above)	NA	4.5	4.5	4.5	4.5	NA	NA	NA	NA	4.5	4.5	4.5
Saturation Flow Rate (vphpl)	1900	1900	1900	1900	1900	NA	NA	NA	NA	1900	1900	1900
Speed (mph)		0			0			NA			0	

* Left Turn Code : 1 - Exclusive left 2 - Left shared with through (IF 2 WBL should not be counted as a lane i.e. all LT lanes should be tallied under through)

Quee Links 800

Freeflow Links 1000

CALCULATION OF RECEPTOR'S COORDINATES

RECEPTOR	X	Y	X	Y
			COORDINATES	
#1			-28	-66
#2			16	-66
#3			28	54
#4			-52	42
#5			-28	-146
#6			16	-146
#7			96	-66
#8			108	54
#9			28	134
#10			-52	122
#11			-132	42
#12			-108	-66
#13			-28	-266
#14			16	-266
#15			216	-66
#16			228	54
#17			28	254
#18			-52	242
#19			-252	42
#20			-228	-66

Number of Links 15

CALCULATION OF LINK COORDINATES (w/ widths and lanes)

LINK	X1	Y1	X2	Y2	Width	Lanes
EB Approach	-1000	-20	0	-20	68	4
EB Departure	0	-32	1000	-32	56	3
EB Left	-1000	-2	0	-2	20	0
WB Approach	1000	26	0	26	44	2
WB Departure	0	14	-1000	14	44	2
WB Left	1000	2	0	2	44	2
NB Approach	0	-1000	0	0	20	0
NB Departure	12	0	12	1000	20	0
NB Left	0	-1000	0	0	20	0
SB Approach	-18	1000	-18	0	44	2
SB Departure	-6	0	-6	-1000	32	1
SB Left	0	1000	0	0	44	2
EB Left Queue	-18	-2	-818	-2	0	0
EB Through Queue	-18	-20	-818	-20	36	3
EB Right Queue	-18	-44	-818	-44	12	1
WB Left Queue	18	2	818	2	24	2
WB Through Queu	18	26	818	26	24	2
WB Right Queue	shared	shared	800	shared	0	0
NB Left Queue	0	-56	0	-856	0	0
NB Through Queue	0	-56	0	-856	0	0
NB Right Queue	shared	shared	shared	shared	0	0
SB Left Queue	0	32	0	832	24	2
SB Through Queue	-18	32	-18	832	12	1
SB Right Queue	-30	32	-30	832	12	1

2035 PM No Build

Broadway Blvd and Sunport Blvd/Woodward Road

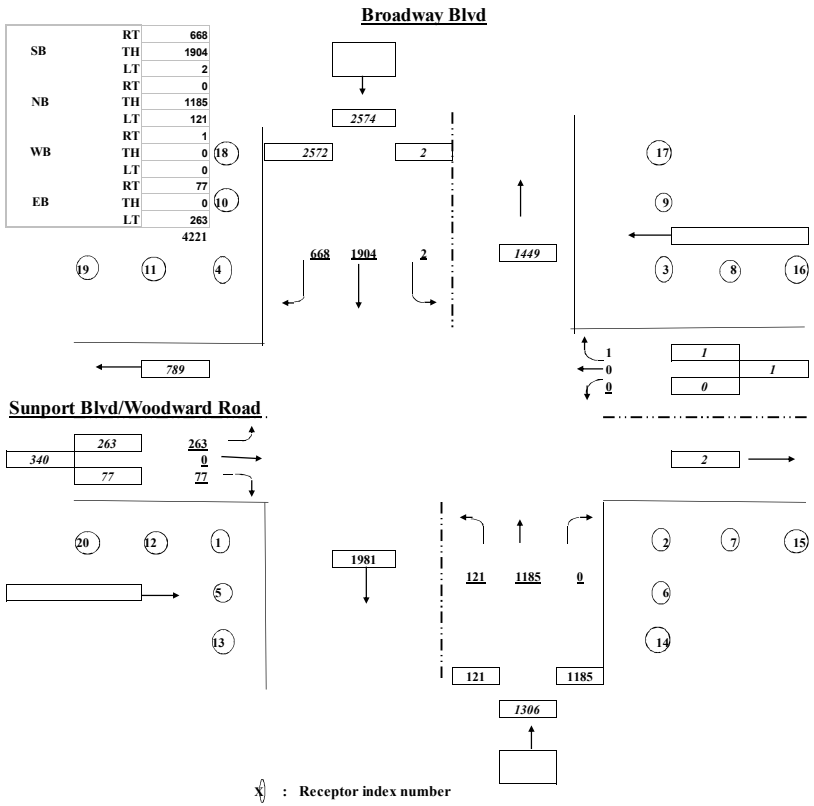

X : Receptor index number

: Approaching speed

C:\data\air\sunport\Round2\3 Sunport-Broadway\[35.XLS]A

INTERSECTION CONFIGURATION , SIGNAL SETTING, AND EMISSION FACTOR

	EBL	EBT	EBR	WBL	WBT	WBR	NBL	NBT	NBR	SBL	SBT	SBR
LeftTurn Code*	2			2			1			1		
No. of Lanes	1	1	0	1	1	0	1	2	0	1	2	1
Lane Width (ft)	12	12	12	12	12	12	12	12	12	12	12	12
Median (ft)		4			4			4			4	
Offset Receptors and Lanes		0			0			0			0	
Cycle Length (sec)	130	130	130	130	130	130	130	130	130	130	130	130
1st Permitted Phase (inc yellow)	34.3	34.3	0	34.3	34.3	0	11.6	84.2		11.5	84.1	84.1
2nd Permitted Phase (inc yellow)												
3rd Permitted Phase (inc yellow)												
Red Time (sec)	NA	95.7	NA	NA	95.7	NA	118.4	45.8	NA	118.5	45.9	41
Lost Time (Incld'd. above)	4.5	4.5	NA	4.5	4.5	NA	4.5	4.5	NA	4.5	4.5	4.5
Saturation Flow Rate (vphpl)	1900	1900	NA	1900	1900	NA	1900	1900	NA	1900	1900	1900
Speed (mph)		0			0			0			0	

* Left Turn Code : 1 - Exclusive left 2 - Left shared with through (IF 2 WBL should not be counted as a lane i.e. all LT lanes should be tallied under through)

Quee Links 800
Freeflow Links 1000

CALCULATION OF RECEPTOR'S COORDINATES

	COORDINATES			
RECEPTOR	X	Y	X	Y
#1			-48	-30
#2			48	-36
#3			48	30
#4			-60	36
#5			-48	-110
#6			48	-116
#7			128	-36
#8			128	30
#9			48	110
#10			-60	116
#11			-140	36
#12			-128	-30
#13			-48	-230
#14			48	-236
#15			248	-36
#16			248	30
#17			48	230
#18			-60	236
#19			-260	36
#20			-248	-30

Number of Links 17

CALCULATION OF LINK COORDINATES (w/ widths and lanes)

LINK	X1	Y1	X2	Y2	Width	Lanes
EB Approach	-1000	-8	0	-8	32	1
EB Departure	0	-14	1000	-14	32	1
EB Left	shared	shared	shared	shared	shared	shared
WB Approach	1000	8	0	8	32	1
WB Departure	0	14	-1000	14	32	1
WB Left	shared	shared	shared	shared	shared	shared
NB Approach	20	-1000	20	0	44	2
NB Departure	20	0	20	1000	44	2
NB Left	2	-1000	2	0	32	1
SB Approach	-20	1000	-20	0	56	3
SB Departure	-20	0	-20	-1000	44	2
SB Left	-2	1000	-2	0	32	1
EB Left Queue	shared	shared	shared	shared	0	0
EB Through Queue	-38	-8	-838	-8	12	1
EB Right Queue	shared	shared	shared	shared	0	0
WB Left Queue	shared	shared	shared	shared	0	0
WB Through Queu	38	8	838	8	12	1
WB Right Queue	shared	shared	800	shared	0	0
NB Left Queue	2	-26	2	-826	12	1
NB Through Queue	20	-26	20	-826	24	2
NB Right Queue	shared	shared	shared	shared	0	0
SB Left Queue	-2	26	-2	826	12	1
SB Through Queue	-20	26	-20	826	24	2
SB Right Queue	-38	26	-38	826	12	1

2035 PM Build

Broadway Blvd and Sunport Blvd/Woodward Road

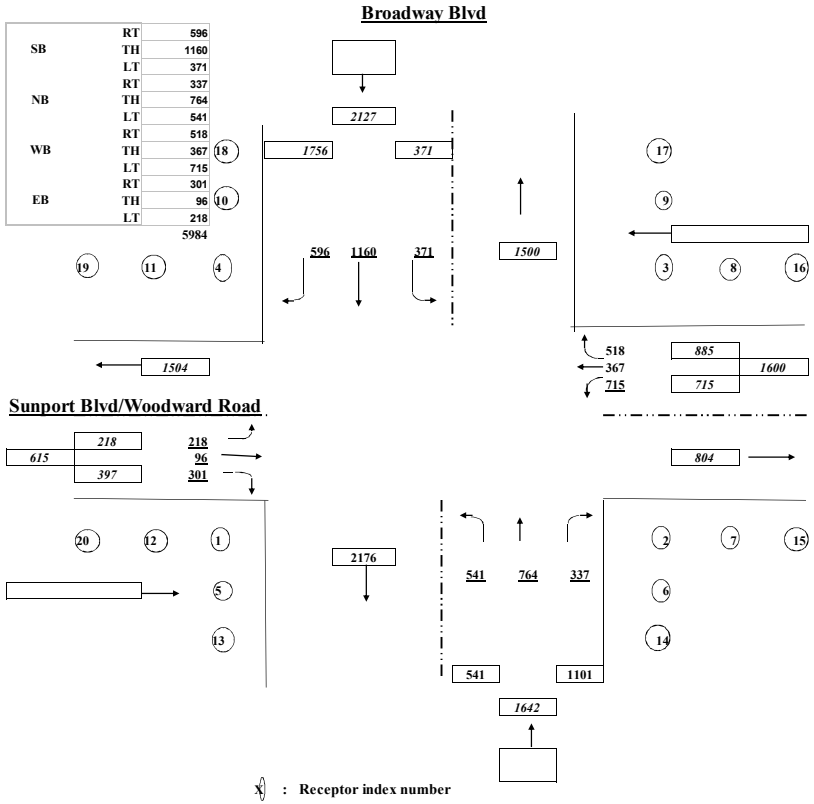

X : Receptor index number

: Approaching speed

C:\data\air\sunport\Round2\3 Sunport-Broadway\[36.XLS]A

INTERSECTION CONFIGURATION , SIGNAL SETTING, AND EMISSION FACTOR

	EBL	EBT	EBR	WBL	WBT	WBR	NBL	NBT	NBR	SBL	SBT	SBR
LeftTurn Code*	1			1			1			1		
No. of Lanes	1	2	1	2	2	1	2	2	1	2	2	1
Lane Width (ft)	12	12	12	12	12	12	12	12	12	12	12	12
Median (ft)		4			4			4			4	
Offset Receptors and Lanes		0			0			0			0	
Cycle Length (sec)	100	100	100	100	100	100	100	100	100	100	100	100
1st Permitted Phase (inc yellow)	11.8	20.6	20.6	17.7	26.5	26.5	19	44.3	44.3	17.4	42.7	42.7
2nd Permitted Phase (inc yellow)												
3rd Permitted Phase (inc yellow)												
Red Time (sec)	88.2	79.4	79.4	82.3	73.5	73.5	81.0	55.7	55.7	82.6	57.3	53
Lost Time (Incld'd. above)	4.5	4.5	4.5	4.5	4.5	4.5	4.5	4.5	4.5	4.5	4.5	4.5
Saturation Flow Rate (vphpl)	1900	1900	1900	1900	1900	1900	1900	1900	1900	1900	1900	1900
Speed (mph)		0			0			0			0	

* Left Turn Code : 1 - Exclusive left 2 - Left shared with through (IF 2 WBL should not be counted as a lane i.e. all LT lanes should be tallied under through)

Quee Links 800
Freeflow Links 1000

CALCULATION OF RECEPTOR'S COORDINATES

	COORDINATES			
RECEPTOR	X	Y	X	Y
#1			-54	-60
#2			66	-54
#3			54	66
#4			-66	48
#5			-54	-140
#6			66	-134
#7			146	-54
#8			134	66
#9			54	146
#10			-66	128
#11			-146	48
#12			-134	-60
#13			-54	-260
#14			66	-254
#15			266	-54
#16			254	66
#17			54	266
#18			-66	248
#19			-266	48
#20			-254	-60

Number of Links 24

CALCULATION OF LINK COORDINATES (w/ widths and lanes)

LINK	X1	Y1	X2	Y2	Width	Lanes
EB Approach	-1000	-20	0	-20	56	3
EB Departure	0	-26	1000	-26	44	2
EB Left	-1000	-2	0	-2	32	1
WB Approach	1000	26	0	26	56	3
WB Departure	0	20	-1000	20	44	2
WB Left	1000	2	0	2	44	2
NB Approach	26	-1000	26	0	56	3
NB Departure	26	0	26	1000	44	2
NB Left	2	-1000	2	0	44	2
SB Approach	-26	1000	-26	0	56	3
SB Departure	-26	0	-26	-1000	44	2
SB Left	-2	1000	-2	0	44	2
EB Left Queue	-44	-2	-844	-2	12	1
EB Through Queue	-44	-20	-844	-20	24	2
EB Right Queue	-44	-38	-844	-38	12	1
WB Left Queue	44	2	844	2	24	2
WB Through Queu	44	26	844	26	24	2
WB Right Queue	44	44	844	44	12	1
NB Left Queue	2	-44	2	-844	24	2
NB Through Queue	26	-44	26	-844	24	2
NB Right Queue	44	-44	44	-844	12	1
SB Left Queue	-2	38	-2	838	24	2
SB Through Queue	-26	38	-26	838	24	2
SB Right Queue	-44	38	-44	838	12	1

Exhibit 3 – CAL3QHC Model Data

1 CAL3QHC (93157)
IBM-PC VERSION (2.01)

RUN NAME: 15.DAT 11111111111111111111

RUN BEGIN ON 05/12/15 AT 19:51

CAL3QHC: LINE SOURCE DISPERSION MODEL - VERSION 2.0, JANUARY 1992

JOB: Sunport I-25 Improvement Project RUN: 1-5 PM No Build Sunport NB-I25

SITE & METEOROLOGICAL VARIABLES

VS = 0.0 CM/S VD = 0.0 CM/S Z0 = 175. CM
U = 1.0 M/S CLAS = 4 (D) ATIM = 60. MINUTES MIXH = 1000. M AMB = 3.0 PPM

LINK VARIABLES

LINK DESCRIPTION	LINK COORDINATES (FT) X1	Y1	X2	Y2	LENGTH (FT)	BRG (DEG)	TYPE	VPH	EF (G/MI)	H (FT)	W (FT)	V/C	QUEUE (VEH)
1. EB A	-1000.0	0.0	0.0	0.0	1000.	90.	AG	905.	1.5	0.0	44.0		
2. EB D	0.0	-14.0	1000.0	-14.0	1000.	90.	AG	1350.	1.5	0.0	44.0		
3. EB L	-1000.0	-2.0	0.0	-2.0	1000.	90.	AG	25.	1.5	0.0	44.0		
4. WB A	1000.0	8.0	0.0	8.0	1000.	270.	AG	2405.	1.5	0.0	56.0		
5. WB D	0.0	14.0	-1000.0	14.0	1000.	270.	AG	845.	1.5	0.0	32.0		
6. NB A	12.0	-1000.0	12.0	0.0	1000.	360.	AG	495.	1.5	0.0	44.0		
7. NB D	6.0	0.0	6.0	1000.0	1000.	360.	AG	1635.	1.5	0.0	32.0		
8. EB L Q	-6.0	-2.0	-19.1	-2.0	13.	270.	AG	10.	100.0	0.0	12.0	0.19	0.7
9. EB TR Q	-6.0	-20.0	-57.9	-20.0	52.	270.	AG	4.	100.0	0.0	24.0	0.32	2.6
10. WB T Q	18.0	8.0	174.9	8.0	157.	90.	AG	4.	100.0	0.0	12.0	0.69	8.0
11. WB R Q	18.0	26.0	169.6	26.0	152.	90.	AG	7.	100.0	0.0	24.0	0.67	7.7
12. NB T Q	12.0	-32.0	12.0	-2746.1	2714.	180.	AG	9.	100.0	0.0	12.0	2.02	137.9
13. NB R Q	24.0	-32.0	24.0	-56.6	25.	180.	AG	9.	100.0	0.0	12.0	0.21	1.3

1

JOB: Sunport I-25 Improvement Project RUN: 1-5 PM No Build Sunport NB-I25

ADDITIONAL QUEUE LINK PARAMETERS

LINK DESCRIPTION	CYCLE LENGTH (SEC)	RED TIME (SEC)	CLEARANCE LOST TIME (SEC)	APPROACH VOL (VPH)	SATURATION FLOW RATE (VPH)	IDLE EM FAC (gm/hr)	SIGNAL TYPE	ARRIVAL RATE
8. EB L Q	110	96	4.5	25	1900	4.22	3	3
9. EB TR Q	110	21	4.5	905	1900	4.22	3	3
10. WB T Q	110	35	4.5	820	1900	4.22	3	3
11. WB R Q	110	35	4.5	1585	1900	4.22	3	3
12. NB T Q	110	90	4.5	470	1900	4.22	3	3
13. NB R Q	110	90	4.5	50	1900	4.22	3	3

RECEPTOR LOCATIONS

RECEPTOR	COORDINATES (FT) X	Y	Z
1. 1	-16.0	-48.0	5.0
2. 2	46.0	-42.0	5.0
3. 3	28.0	54.0	5.0
4. 4	-16.0	36.0	5.0
5. 5	-16.0	-128.0	5.0
6. 6	46.0	-122.0	5.0
7. 7	126.0	-42.0	5.0
8. 8	108.0	54.0	5.0
9. 9	28.0	134.0	5.0
10. 10	-16.0	116.0	5.0
11. 11	-96.0	36.0	5.0
12. 12	-96.0	-48.0	5.0
13. 13	-16.0	-248.0	5.0
14. 14	46.0	-242.0	5.0
15. 15	246.0	-42.0	5.0
16. 16	228.0	54.0	5.0
17. 17	28.0	254.0	5.0
18. 18	-16.0	236.0	5.0
19. 19	-216.0	36.0	5.0
20. 20	-216.0	-48.0	5.0

1

JOB: Sunport I-25 Improvement Project RUN: 1-5 PM No Build Sunport NB-I25

MODEL RESULTS

REMARKS : In search of the angle corresponding to the maximum concentration, only the first angle, of the angles with same maximum concentrations, is indicated as maximum.

WIND ANGLE RANGE: 0.-360.

WIND ANGLE (DEGR)	CONCENTRATION (PPM) REC1	REC2	REC3	REC4	REC5	REC6	REC7	REC8	REC9	REC10	REC11	REC12	REC13	REC14	REC15	REC16	REC17	REC18	REC19	REC20
0.	3.1	3.3	3.1	3.1	3.0	3.0	3.2	3.0	3.1	3.1	3.0	3.0	3.0	3.0	3.2	3.0	3.1	3.1	3.0	3.0
5.	3.1	3.2	3.1	3.1	3.1	3.0	3.2	3.0	3.1	3.1	3.0	3.0	3.0	3.0	3.2	3.0	3.1	3.1	3.0	3.0

10. *	3.1	3.2	3.1	3.1	3.0	3.0	3.2	3.0	3.0	3.1	3.0	3.0	3.0	3.0	3.2	3.0	3.0	3.1	3.0	3.0
15. *	3.1	3.2	3.0	3.1	3.0	3.0	3.2	3.0	3.0	3.1	3.0	3.0	3.0	3.0	3.2	3.0	3.0	3.1	3.0	3.0
20. *	3.1	3.2	3.0	3.1	3.0	3.0	3.2	3.0	3.0	3.1	3.0	3.0	3.0	3.0	3.2	3.0	3.0	3.1	3.0	3.0
25. *	3.2	3.2	3.0	3.1	3.0	3.0	3.2	3.0	3.0	3.1	3.0	3.0	3.0	3.0	3.2	3.0	3.0	3.1	3.0	3.0
30. *	3.1	3.2	3.0	3.1	3.0	3.0	3.2	3.0	3.0	3.1	3.0	3.0	3.0	3.0	3.2	3.0	3.0	3.1	3.0	3.0
35. *	3.1	3.2	3.0	3.1	3.0	3.0	3.2	3.0	3.0	3.1	3.0	3.0	3.0	3.0	3.2	3.0	3.0	3.1	3.0	3.0
40. *	3.1	3.2	3.0	3.1	3.0	3.0	3.2	3.0	3.0	3.1	3.0	3.0	3.0	3.0	3.2	3.0	3.0	3.1	3.0	3.0
45. *	3.1	3.2	3.0	3.1	3.0	3.0	3.2	3.0	3.0	3.1	3.0	3.0	3.0	3.0	3.2	3.0	3.0	3.1	3.0	3.0
50. *	3.2	3.2	3.0	3.1	3.0	3.1	3.2	3.0	3.0	3.1	3.0	3.0	3.0	3.0	3.2	3.0	3.0	3.1	3.0	3.0
55. *	3.2	3.2	3.0	3.1	3.1	3.1	3.2	3.0	3.0	3.1	3.0	3.0	3.0	3.0	3.2	3.0	3.0	3.1	3.0	3.0
60. *	3.2	3.2	3.0	3.1	3.1	3.1	3.2	3.0	3.0	3.1	3.0	3.0	3.0	3.0	3.2	3.0	3.0	3.1	3.0	3.0
65. *	3.2	3.2	3.0	3.1	3.1	3.1	3.2	3.0	3.0	3.1	3.0	3.1	3.0	3.0	3.2	3.0	3.0	3.1	3.0	3.0
70. *	3.2	3.2	3.0	3.1	3.1	3.1	3.2	3.0	3.0	3.1	3.0	3.1	3.0	3.0	3.2	3.0	3.0	3.1	3.0	3.0
75. *	3.2	3.2	3.0	3.2	3.0	3.0	3.2	3.0	3.0	3.1	3.0	3.1	3.0	3.0	3.2	3.0	3.0	3.1	3.0	3.0
80. *	3.2	3.2	3.0	3.2	3.0	3.0	3.2	3.0	3.0	3.1	3.1	3.2	3.0	3.0	3.2	3.0	3.0	3.1	3.0	3.1
85. *	3.2	3.2	3.1	3.2	3.0	3.0	3.2	3.1	3.0	3.1	3.1	3.2	3.0	3.0	3.2	3.1	3.0	3.1	3.0	3.1
90. *	3.2	3.2	3.1	3.3	3.0	3.0	3.2	3.1	3.0	3.1	3.1	3.1	3.0	3.0	3.2	3.1	3.0	3.1	3.1	3.0
95. *	3.0	3.2	3.1	3.4	3.0	3.0	3.1	3.1	3.0	3.1	3.1	3.0	3.0	3.0	3.1	3.1	3.0	3.1	3.1	3.0
100. *	3.0	3.0	3.1	3.4	3.0	3.0	3.0	3.1	3.0	3.2	3.1	3.0	3.0	3.0	3.0	3.1	3.0	3.1	3.2	3.0
105. *	3.0	3.0	3.1	3.4	3.0	3.0	3.0	3.1	3.1	3.2	3.1	3.0	3.0	3.0	3.0	3.1	3.0	3.1	3.1	3.0
110. *	3.0	3.0	3.1	3.4	3.0	3.0	3.0	3.1	3.1	3.2	3.1	3.0	3.0	3.0	3.0	3.1	3.0	3.1	3.1	3.0
115. *	3.0	3.0	3.1	3.3	3.0	3.0	3.0	3.1	3.1	3.2	3.0	3.0	3.0	3.0	3.0	3.1	3.0	3.1	3.1	3.0
120. *	3.0	3.0	3.1	3.3	3.0	3.0	3.0	3.1	3.1	3.2	3.0	3.0	3.0	3.0	3.0	3.1	3.0	3.1	3.1	3.0
125. *	3.0	3.0	3.1	3.3	3.0	3.0	3.0	3.1	3.1	3.2	3.0	3.0	3.0	3.0	3.0	3.1	3.0	3.1	3.1	3.0
130. *	3.0	3.0	3.1	3.2	3.0	3.0	3.0	3.1	3.1	3.2	3.0	3.0	3.0	3.0	3.0	3.1	3.0	3.1	3.0	3.0
135. *	3.0	3.0	3.1	3.2	3.0	3.0	3.0	3.1	3.1	3.2	3.0	3.0	3.0	3.0	3.0	3.1	3.0	3.1	3.0	3.0
140. *	3.0	3.0	3.1	3.2	3.0	3.0	3.0	3.1	3.0	3.2	3.0	3.0	3.0	3.0	3.0	3.1	3.0	3.1	3.0	3.0
145. *	3.0	3.0	3.1	3.2	3.0	3.0	3.0	3.1	3.0	3.1	3.0	3.0	3.0	3.0	3.0	3.1	3.0	3.1	3.0	3.0
150. *	3.0	3.0	3.1	3.2	3.0	3.0	3.0	3.1	3.0	3.1	3.0	3.0	3.0	3.0	3.0	3.1	3.0	3.1	3.0	3.0
155. *	3.0	3.0	3.1	3.1	3.0	3.0	3.0	3.1	3.0	3.1	3.0	3.0	3.0	3.0	3.0	3.1	3.0	3.1	3.0	3.0
160. *	3.0	3.0	3.1	3.0	3.0	3.0	3.0	3.1	3.0	3.1	3.0	3.0	3.0	3.0	3.0	3.1	3.0	3.1	3.0	3.0
165. *	3.0	3.0	3.1	3.0	3.0	3.0	3.0	3.1	3.0	3.1	3.0	3.0	3.0	3.0	3.0	3.1	3.0	3.1	3.0	3.0
170. *	3.0	3.0	3.1	3.0	3.0	3.0	3.0	3.1	3.0	3.1	3.0	3.0	3.0	3.0	3.0	3.1	3.0	3.1	3.0	3.0
175. *	3.0	3.0	3.1	3.0	3.0	3.0	3.0	3.1	3.0	3.1	3.0	3.0	3.0	3.0	3.0	3.1	3.1	3.1	3.0	3.0
180. *	3.0	3.0	3.1	3.0	3.0	3.0	3.0	3.1	3.1	3.0	3.0	3.0	3.0	3.0	3.0	3.1	3.1	3.1	3.0	3.0
185. *	3.0	3.0	3.1	3.0	3.0	3.0	3.0	3.1	3.1	3.0	3.0	3.0	3.0	3.0	3.0	3.1	3.1	3.1	3.0	3.0
190. *	3.0	3.0	3.1	3.0	3.0	3.0	3.0	3.1	3.1	3.0	3.0	3.0	3.0	3.0	3.0	3.1	3.1	3.0	3.0	3.0
195. *	3.0	3.0	3.2	3.0	3.0	3.0	3.0	3.1	3.1	3.0	3.0	3.0	3.0	3.0	3.0	3.1	3.1	3.0	3.0	3.0
200. *	3.0	3.0	3.2	3.0	3.0	3.0	3.0	3.1	3.1	3.0	3.0	3.0	3.0	3.0	3.0	3.1	3.1	3.0	3.0	3.0
205. *	3.0	3.0	3.2	3.0	3.0	3.0	3.0	3.1	3.1	3.0	3.0	3.0	3.0	3.0	3.0	3.1	3.1	3.0	3.0	3.0

1

JOB: Sunport I-25 Improvement Project RUN: 1-5 PM No Build Sunport NB-I25

WIND ANGLE (DEGR) *	CONCENTRATION (PPM) REC1	REC2	REC3	REC4	REC5	REC6	REC7	REC8	REC9	REC10	REC11	REC12	REC13	REC14	REC15	REC16	REC17	REC18	REC19	REC20
210. *	3.0	3.0	3.2	3.0	3.0	3.0	3.0	3.1	3.1	3.0	3.0	3.0	3.0	3.0	3.0	3.1	3.1	3.0	3.0	3.0
215. *	3.0	3.0	3.1	3.0	3.0	3.0	3.0	3.1	3.1	3.0	3.0	3.0	3.0	3.0	3.0	3.1	3.1	3.0	3.0	3.0
220. *	3.0	3.0	3.1	3.0	3.0	3.0	3.0	3.1	3.1	3.0	3.0	3.0	3.0	3.0	3.0	3.1	3.1	3.0	3.0	3.0
225. *	3.0	3.0	3.1	3.0	3.0	3.0	3.0	3.1	3.1	3.0	3.0	3.0	3.0	3.0	3.0	3.1	3.1	3.0	3.0	3.0
230. *	3.0	3.0	3.1	3.0	3.0	3.0	3.0	3.1	3.1	3.0	3.0	3.0	3.0	3.0	3.0	3.1	3.1	3.0	3.0	3.0
235. *	3.0	3.0	3.1	3.1	3.0	3.0	3.0	3.1	3.1	3.0	3.1	3.0	3.0	3.0	3.0	3.1	3.1	3.0	3.1	3.0
240. *	3.0	3.0	3.1	3.1	3.0	3.0	3.0	3.1	3.1	3.0	3.1	3.0	3.0	3.0	3.0	3.1	3.1	3.0	3.1	3.0
245. *	3.0	3.0	3.1	3.2	3.0	3.0	3.0	3.1	3.1	3.0	3.2	3.0	3.0	3.0	3.0	3.1	3.1	3.0	3.2	3.0
250. *	3.0	3.0	3.1	3.2	3.0	3.0	3.0	3.1	3.1	3.0	3.2	3.0	3.0	3.0	3.0	3.1	3.1	3.0	3.2	3.0
255. *	3.0	3.0	3.1	3.2	3.0	3.0	3.0	3.1	3.1	3.0	3.2	3.0	3.0	3.0	3.0	3.1	3.1	3.0	3.2	3.0
260. *	3.0	3.0	3.1	3.2	3.0	3.0	3.0	3.0	3.1	3.0	3.2	3.0	3.0	3.0	3.0	3.1	3.1	3.0	3.2	3.0
265. *	3.0	3.0	3.1	3.1	3.0	3.0	3.0	3.0	3.1	3.0	3.1	3.0	3.0	3.0	3.0	3.1	3.1	3.0	3.1	3.0
270. *	3.0	3.0	3.1	3.1	3.0	3.0	3.0	3.0	3.1	3.0	3.1	3.0	3.0	3.0	3.1	3.0	3.1	3.0	3.0	3.0
275. *	3.0	3.0	3.1	3.0	3.0	3.0	3.1	3.0	3.1	3.0	3.0	3.0	3.0	3.0	3.2	3.0	3.1	3.0	3.0	3.0
280. *	3.0	3.0	3.1	3.0	3.0	3.0	3.1	3.0	3.1	3.0	3.0	3.0	3.0	3.0	3.2	3.0	3.1	3.0	3.0	3.0
285. *	3.0	3.0	3.1	3.0	3.0	3.0	3.2	3.0	3.1	3.0	3.0	3.0	3.0	3.0	3.2	3.0	3.1	3.0	3.0	3.0
290. *	3.0	3.0	3.1	3.0	3.0	3.0	3.2	3.0	3.1	3.0	3.0	3.0	3.0	3.0	3.2	3.0	3.1	3.0	3.0	3.0
295. *	3.0	3.0	3.1	3.0	3.0	3.0	3.2	3.0	3.1	3.0	3.0	3.0	3.0	3.0	3.2	3.0	3.1	3.0	3.0	3.0
300. *	3.0	3.0	3.1	3.0	3.0	3.0	3.2	3.0	3.1	3.0	3.0	3.0	3.0	3.0	3.2	3.0	3.1	3.0	3.0	3.0
305. *	3.0	3.1	3.1	3.0	3.0	3.0	3.2	3.0	3.1	3.0	3.0	3.0	3.0	3.0	3.2	3.0	3.1	3.0	3.0	3.0
310. *	3.0	3.1	3.1	3.0	3.0	3.0	3.2	3.0	3.1	3.0	3.0	3.0	3.0	3.0	3.2	3.0	3.1	3.0	3.0	3.0
315. *	3.0	3.1	3.1	3.0	3.0	3.0	3.2	3.0	3.1	3.0	3.0	3.0	3.0	3.0	3.2	3.0	3.1	3.0	3.0	3.0
320. *	3.0	3.2	3.1	3.0	3.0	3.0	3.2	3.0	3.1	3.0	3.0	3.0	3.0	3.0	3.2	3.0	3.1	3.0	3.0	3.0
325. *	3.0	3.2	3.1	3.0	3.0	3.0	3.2	3.0	3.1	3.0	3.0	3.0	3.0	3.0	3.2	3.0	3.1	3.0	3.0	3.0
330. *	3.0	3.3	3.1	3.0	3.0	3.0	3.2	3.0	3.1	3.0	3.0	3.0	3.0	3.0	3.2	3.0	3.1	3.0	3.0	3.0
335. *	3.0	3.3	3.1	3.0	3.0	3.0	3.2	3.0	3.1	3.0	3.0	3.0	3.0	3.0	3.2	3.0	3.1	3.0	3.0	3.0
340. *	3.0	3.3	3.1	3.0	3.0	3.0	3.2	3.0	3.1	3.0	3.0	3.0	3.0	3.0	3.2	3.0	3.1	3.0	3.0	3.0
345. *	3.0	3.3	3.1	3.0	3.0	3.0	3.2	3.0	3.1	3.0	3.0	3.0	3.0	3.0	3.2	3.0	3.1	3.0	3.0	3.0
350. *	3.0	3.3	3.1	3.1	3.0	3.0	3.2	3.0	3.1	3.0	3.0	3.0	3.0	3.0	3.2	3.0	3.1	3.0	3.0	3.0
355. *	3.1	3.3	3.1	3.1	3.0	3.0	3.2	3.0	3.1	3.1	3.0	3.0	3.0	3.0	3.2	3.0	3.1	3.1	3.0	3.0
360. *	3.1	3.3	3.1	3.1	3.0	3.0	3.2	3.0	3.1	3.1	3.0	3.0	3.0	3.0	3.2	3.0	3.1	3.1	3.0	3.0
MAX *	3.2	3.3	3.2	3.4	3.1	3.1	3.2	3.1	3.1	3.2	3.2	3.2	3.0	3.0	3.2	3.1	3.1	3.1	3.2	3.1
DEGR. *	25	0	195	95	5	50	0	85	0	100	245	80	0	0	0	85	0	0	100	80

THE HIGHEST CONCENTRATION IS 3.40 PPM AT 95 DEGREES FROM REC4 .

1

JOB: Sunport I-25 Improvement Project RUN: 1-5 PM No Build Sunport NB-I25

RECEPTOR - LINK MATRIX FOR THE ANGLE PRODUCING
THE MAXIMUM CONCENTRATION FOR EACH RECEPTOR

	CO/LINK (PPM) ANGLE (DEGREES) REC1	REC2	REC3	REC4	REC5	REC6	REC7	REC8	REC9	REC10	REC11	REC12	REC13	REC14	REC15	REC16	REC17	REC18	REC19	REC20
LINK # *	25	0	195	95	5	50	0	85	0	100	245	80	0	0	0	85	0	0	100	80

1	*	0.0	0.0	0.0	0.0	0.0	0.0	0.0	0.0	0.0	0.0	0.1	0.0	0.0	0.0	0.0	0.0	0.0	0.0	0.0	0.0
2	*	0.0	0.1	0.0	0.1	0.0	0.0	0.1	0.0	0.0	0.0	0.0	0.1	0.0	0.0	0.1	0.0	0.0	0.0	0.0	0.0
3	*	0.0	0.0	0.0	0.0	0.0	0.0	0.0	0.0	0.0	0.0	0.0	0.0	0.0	0.0	0.0	0.0	0.0	0.0	0.0	0.0
4	*	0.1	0.1	0.1	0.2	0.0	0.1	0.1	0.1	0.0	0.1	0.0	0.1	0.0	0.0	0.1	0.1	0.0	0.0	0.1	0.1
5	*	0.0	0.0	0.0	0.0	0.0	0.0	0.0	0.0	0.0	0.0	0.1	0.0	0.0	0.0	0.0	0.0	0.0	0.0	0.1	0.0
6	*	0.0	0.0	0.0	0.0	0.0	0.0	0.0	0.0	0.0	0.0	0.0	0.0	0.0	0.0	0.0	0.0	0.0	0.0	0.0	0.0
7	*	0.1	0.1	0.1	0.1	0.1	0.0	0.0	0.0	0.1	0.1	0.0	0.0	0.0	0.0	0.0	0.0	0.1	0.1	0.0	0.0
8	*	0.0	0.0	0.0	0.0	0.0	0.0	0.0	0.0	0.0	0.0	0.0	0.0	0.0	0.0	0.0	0.0	0.0	0.0	0.0	0.0
9	*	0.0	0.0	0.0	0.0	0.0	0.0	0.0	0.0	0.0	0.0	0.0	0.0	0.0	0.0	0.0	0.0	0.0	0.0	0.0	0.0
10	*	0.0	0.0	0.0	0.0	0.0	0.0	0.0	0.0	0.0	0.0	0.0	0.0	0.0	0.0	0.0	0.0	0.0	0.0	0.0	0.0
11	*	0.0	0.0	0.0	0.0	0.0	0.0	0.0	0.0	0.0	0.0	0.0	0.0	0.0	0.0	0.0	0.0	0.0	0.0	0.0	0.0
12	*	0.0	0.0	0.0	0.0	0.0	0.0	0.0	0.0	0.0	0.0	0.0	0.0	0.0	0.0	0.0	0.0	0.0	0.0	0.0	0.0
13	*	0.0	0.0	0.0	0.0	0.0	0.0	0.0	0.0	0.0	0.0	0.0	0.0	0.0	0.0	0.0	0.0	0.0	0.0	0.0	0.0

RUN ENDED ON 05/12/15 AT 19:51

1 CAL3QHC (93157)
IBM-PC VERSION (2.01)

RUN NAME: 16.DAT 44444444444444444444

RUN BEGIN ON 05/12/15 AT 19:26

CAL3QHC: LINE SOURCE DISPERSION MODEL - VERSION 2.0, JANUARY 1992

JOB: Sunport I-25 Improvement Project RUN: 1-6 PM Build Sunport NB-I25

SITE & METEOROLOGICAL VARIABLES

VS = 0.0 CM/S VD = 0.0 CM/S Z0 = 175. CM
U = 1.0 M/S CLAS = 4 (D) ATIM = 60. MINUTES MIXH = 1000. M AMB = 3.0 PPM

LINK VARIABLES

LINK DESCRIPTION	LINK COORDINATES (FT) X1	Y1	X2	Y2	LENGTH (FT)	BRG (DEG)	TYPE	VPH	EF (G/MI)	H (FT)	W (FT)	V/C	QUEUE (VEH)
1. EB A	-1000.0	-26.0	0.0	-26.0	1000.	90.	AG	1415.	1.5	0.0	44.0		
2. EB D	0.0	-14.0	1000.0	-14.0	1000.	90.	AG	1185.	1.5	0.0	44.0		
3. EB L	-1000.0	-2.0	0.0	-2.0	1000.	90.	AG	630.	1.5	0.0	44.0		
4. WB A	1000.0	20.0	0.0	20.0	1000.	270.	AG	2415.	1.5	0.0	68.0		
5. WB D	0.0	32.0	-1000.0	32.0	1000.	270.	AG	1565.	1.5	0.0	56.0		
6. NB A	12.0	-1000.0	12.0	0.0	1000.	360.	AG	920.	1.5	0.0	44.0		
7. NB D	6.0	0.0	6.0	1000.0	1000.	360.	AG	2000.	1.5	0.0	32.0		
8. EB L Q	-6.0	-2.0	-542.0	-2.0	536.	270.	AG	18.	100.0	0.0	24.0	1.11	27.2
9. EB TR Q	-6.0	-26.0	-85.3	-26.0	79.	270.	AG	8.	100.0	0.0	24.0	0.34	4.0
10. WB T Q	18.0	20.0	140.6	20.0	123.	90.	AG	19.	100.0	0.0	36.0	0.51	6.2
11. WB R Q	18.0	44.0	7087.1	45.3	7069.	90.	AG	6.	100.0	0.0	12.0	1.92	359.1
12. NB T Q	12.0	-32.0	12.0	-42.0	10.	180.	AG	8.	100.0	0.0	12.0	0.05	0.5
13. NB R Q	24.0	-32.0	24.0	-194.7	163.	180.	AG	8.	100.0	0.0	12.0	0.76	8.3

1 PAGE 2

JOB: Sunport I-25 Improvement Project RUN: 1-6 PM Build Sunport NB-I25

ADDITIONAL QUEUE LINK PARAMETERS

LINK DESCRIPTION	CYCLE LENGTH (SEC)	RED TIME (SEC)	CLEARANCE LOST TIME (SEC)	APPROACH VOL (VPH)	SATURATION FLOW RATE (VPH)	IDLE EM FAC (gm/hr)	SIGNAL TYPE	ARRIVAL RATE
8. EB L Q	110	87	4.5	630	1900	4.22	3	3
9. EB TR Q	110	37	4.5	785	1900	4.22	3	3
10. WB T Q	110	63	4.5	1070	1900	4.22	3	3
11. WB R Q	110	63	4.5	1345	1900	4.22	3	3
12. NB T Q	110	73	4.5	25	1900	4.22	3	3
13. NB R Q	110	73	4.5	400	1900	4.22	3	3

RECEPTOR LOCATIONS

RECEPTOR	COORDINATES (FT) X	Y	Z
1. 1	-16.0	-54.0	5.0
2. 2	46.0	-42.0	5.0
3. 3	28.0	66.0	5.0
4. 4	-16.0	66.0	5.0
5. 5	-16.0	-134.0	5.0
6. 6	46.0	-122.0	5.0
7. 7	126.0	-42.0	5.0
8. 8	108.0	66.0	5.0
9. 9	28.0	146.0	5.0
10. 10	-16.0	146.0	5.0
11. 11	-96.0	66.0	5.0
12. 12	-96.0	-54.0	5.0
13. 13	-16.0	-254.0	5.0
14. 14	46.0	-242.0	5.0
15. 15	246.0	-42.0	5.0
16. 16	228.0	66.0	5.0
17. 17	28.0	266.0	5.0
18. 18	-16.0	266.0	5.0
19. 19	-216.0	66.0	5.0
20. 20	-216.0	-54.0	5.0

1 PAGE 3

JOB: Sunport I-25 Improvement Project RUN: 1-6 PM Build Sunport NB-I25

MODEL RESULTS

REMARKS : In search of the angle corresponding to the maximum concentration, only the first angle, of the angles with same maximum concentrations, is indicated as maximum.

WIND ANGLE RANGE: 0.-360.

WIND ANGLE (DEGR)	CONCENTRATION (PPM) REC1	REC2	REC3	REC4	REC5	REC6	REC7	REC8	REC9	REC10	REC11	REC12	REC13	REC14	REC15	REC16	REC17	REC18	REC19	REC20
0.	3.2	3.3	3.1	3.1	3.1	3.1	3.2	3.0	3.1	3.1	3.0	3.1	3.0	3.0	3.2	3.0	3.1	3.1	3.0	3.1
5.	3.2	3.2	3.1	3.1	3.1	3.0	3.2	3.0	3.1	3.1	3.0	3.1	3.0	3.0	3.2	3.0	3.1	3.1	3.0	3.1

10. *	3.2	3.2	3.1	3.2	3.1	3.0	3.2	3.0	3.1	3.2	3.0	3.1	3.1	3.0	3.2	3.0	3.1	3.2	3.0	3.1
15. *	3.2	3.2	3.0	3.2	3.0	3.0	3.2	3.0	3.0	3.2	3.0	3.1	3.1	3.0	3.2	3.0	3.0	3.2	3.0	3.1
20. *	3.1	3.2	3.0	3.1	3.1	3.0	3.2	3.0	3.0	3.1	3.0	3.1	3.1	3.0	3.2	3.0	3.0	3.1	3.0	3.1
25. *	3.2	3.2	3.0	3.1	3.1	3.0	3.2	3.0	3.0	3.1	3.0	3.1	3.1	3.0	3.2	3.0	3.0	3.1	3.0	3.1
30. *	3.1	3.2	3.0	3.1	3.1	3.0	3.2	3.0	3.0	3.1	3.0	3.1	3.1	3.0	3.2	3.0	3.0	3.1	3.0	3.1
35. *	3.1	3.2	3.0	3.1	3.1	3.0	3.2	3.0	3.0	3.1	3.0	3.1	3.1	3.0	3.2	3.0	3.0	3.1	3.0	3.1
40. *	3.1	3.2	3.0	3.1	3.1	3.0	3.2	3.0	3.0	3.1	3.0	3.1	3.1	3.0	3.2	3.0	3.0	3.1	3.0	3.1
45. *	3.1	3.2	3.0	3.1	3.0	3.0	3.2	3.0	3.0	3.1	3.0	3.1	3.0	3.0	3.2	3.0	3.0	3.1	3.0	3.1
50. *	3.1	3.2	3.0	3.1	3.0	3.1	3.2	3.0	3.0	3.1	3.0	3.1	3.0	3.0	3.2	3.0	3.0	3.1	3.0	3.1
55. *	3.1	3.2	3.0	3.1	3.0	3.1	3.2	3.0	3.0	3.1	3.0	3.1	3.0	3.0	3.2	3.0	3.0	3.1	3.0	3.1
60. *	3.2	3.2	3.0	3.1	3.1	3.1	3.2	3.0	3.0	3.1	3.0	3.2	3.0	3.0	3.2	3.0	3.0	3.1	3.0	3.1
65. *	3.2	3.2	3.0	3.1	3.1	3.1	3.2	3.0	3.0	3.1	3.0	3.2	3.0	3.0	3.2	3.0	3.0	3.1	3.0	3.1
70. *	3.2	3.2	3.0	3.1	3.0	3.1	3.2	3.0	3.0	3.1	3.0	3.2	3.0	3.0	3.2	3.0	3.0	3.1	3.0	3.1
75. *	3.2	3.2	3.0	3.1	3.0	3.0	3.2	3.0	3.0	3.1	3.0	3.2	3.0	3.0	3.2	3.0	3.0	3.1	3.0	3.2
80. *	3.2	3.2	3.0	3.1	3.0	3.0	3.2	3.0	3.0	3.1	3.0	3.2	3.0	3.0	3.2	3.0	3.0	3.1	3.0	3.2
85. *	3.2	3.2	3.1	3.2	3.0	3.0	3.2	3.1	3.0	3.1	3.1	3.1	3.0	3.0	3.2	3.1	3.0	3.1	3.0	3.2
90. *	3.1	3.2	3.1	3.2	3.0	3.0	3.2	3.1	3.0	3.1	3.1	3.1	3.0	3.0	3.2	3.1	3.0	3.1	3.2	3.1
95. *	3.0	3.1	3.1	3.2	3.0	3.0	3.1	3.1	3.0	3.1	3.1	3.0	3.0	3.0	3.0	3.1	3.0	3.1	3.2	3.0
100. *	3.0	3.0	3.1	3.2	3.0	3.0	3.0	3.1	3.0	3.1	3.2	3.0	3.0	3.0	3.0	3.1	3.0	3.1	3.2	3.0
105. *	3.0	3.0	3.1	3.2	3.0	3.0	3.0	3.1	3.1	3.2	3.2	3.0	3.0	3.0	3.0	3.1	3.0	3.1	3.1	3.0
110. *	3.0	3.0	3.1	3.2	3.0	3.0	3.0	3.1	3.1	3.2	3.2	3.0	3.0	3.0	3.0	3.1	3.0	3.1	3.1	3.0
115. *	3.0	3.0	3.1	3.2	3.0	3.0	3.0	3.1	3.1	3.2	3.2	3.0	3.0	3.0	3.0	3.1	3.0	3.1	3.1	3.0
120. *	3.0	3.0	3.1	3.2	3.0	3.0	3.0	3.1	3.1	3.2	3.1	3.0	3.0	3.0	3.0	3.1	3.0	3.1	3.1	3.0
125. *	3.0	3.0	3.1	3.2	3.0	3.0	3.0	3.1	3.1	3.2	3.1	3.0	3.0	3.0	3.0	3.1	3.0	3.1	3.1	3.0
130. *	3.0	3.0	3.1	3.2	3.0	3.0	3.0	3.1	3.1	3.2	3.1	3.0	3.0	3.0	3.0	3.1	3.0	3.1	3.1	3.0
135. *	3.0	3.0	3.1	3.2	3.0	3.0	3.0	3.1	3.1	3.2	3.1	3.0	3.0	3.0	3.0	3.1	3.0	3.1	3.1	3.0
140. *	3.1	3.0	3.1	3.2	3.1	3.0	3.0	3.1	3.1	3.1	3.1	3.0	3.1	3.0	3.0	3.1	3.0	3.1	3.1	3.0
145. *	3.1	3.0	3.1	3.2	3.1	3.0	3.0	3.1	3.0	3.1	3.1	3.0	3.1	3.0	3.0	3.1	3.0	3.1	3.1	3.0
150. *	3.1	3.0	3.1	3.2	3.1	3.0	3.0	3.1	3.0	3.1	3.1	3.0	3.1	3.0	3.0	3.1	3.0	3.1	3.1	3.0
155. *	3.1	3.0	3.1	3.2	3.1	3.0	3.0	3.1	3.0	3.1	3.1	3.0	3.1	3.0	3.0	3.1	3.0	3.1	3.1	3.0
160. *	3.1	3.0	3.1	3.1	3.1	3.0	3.0	3.1	3.0	3.1	3.1	3.0	3.1	3.0	3.0	3.1	3.0	3.1	3.1	3.0
165. *	3.1	3.0	3.1	3.1	3.1	3.0	3.0	3.1	3.0	3.1	3.1	3.0	3.1	3.0	3.0	3.1	3.0	3.1	3.1	3.0
170. *	3.1	3.0	3.1	3.2	3.1	3.0	3.0	3.1	3.0	3.1	3.1	3.0	3.1	3.0	3.0	3.1	3.0	3.1	3.1	3.0
175. *	3.1	3.0	3.1	3.2	3.1	3.0	3.0	3.1	3.0	3.1	3.1	3.0	3.1	3.0	3.0	3.1	3.1	3.1	3.1	3.0
180. *	3.1	3.0	3.1	3.1	3.1	3.0	3.0	3.1	3.1	3.1	3.1	3.0	3.1	3.0	3.0	3.1	3.1	3.1	3.1	3.0
185. *	3.0	3.1	3.2	3.1	3.0	3.0	3.0	3.1	3.1	3.0	3.1	3.0	3.0	3.0	3.0	3.1	3.1	3.1	3.1	3.0
190. *	3.0	3.1	3.2	3.1	3.0	3.1	3.0	3.1	3.1	3.0	3.1	3.0	3.0	3.1	3.0	3.1	3.1	3.0	3.1	3.0
195. *	3.0	3.1	3.2	3.1	3.0	3.1	3.0	3.1	3.1	3.0	3.1	3.0	3.0	3.1	3.0	3.1	3.1	3.0	3.1	3.0
200. *	3.0	3.1	3.2	3.1	3.0	3.1	3.0	3.1	3.1	3.0	3.1	3.0	3.0	3.1	3.0	3.1	3.1	3.0	3.1	3.0
205. *	3.0	3.1	3.2	3.1	3.0	3.1	3.0	3.1	3.1	3.0	3.1	3.0	3.0	3.1	3.0	3.1	3.1	3.0	3.1	3.0

1

JOB: Sunport I-25 Improvement Project RUN: 1-6 PM Build Sunport NB-I25

WIND ANGLE (DEGR) *	CONCENTRATION (PPM) REC1	REC2	REC3	REC4	REC5	REC6	REC7	REC8	REC9	REC10	REC11	REC12	REC13	REC14	REC15	REC16	REC17	REC18	REC19	REC20
210. *	3.0	3.1	3.2	3.1	3.0	3.1	3.0	3.1	3.1	3.0	3.1	3.0	3.0	3.1	3.0	3.1	3.1	3.0	3.1	3.0
215. *	3.0	3.0	3.1	3.1	3.0	3.0	3.0	3.1	3.1	3.0	3.1	3.0	3.0	3.0	3.0	3.1	3.1	3.0	3.1	3.0
220. *	3.0	3.0	3.1	3.1	3.0	3.0	3.0	3.1	3.1	3.0	3.1	3.0	3.0	3.0	3.0	3.1	3.1	3.0	3.1	3.0
225. *	3.0	3.0	3.1	3.1	3.0	3.0	3.0	3.1	3.1	3.0	3.1	3.0	3.0	3.0	3.0	3.1	3.1	3.0	3.1	3.0
230. *	3.0	3.0	3.2	3.1	3.0	3.0	3.0	3.1	3.1	3.0	3.1	3.0	3.0	3.0	3.0	3.1	3.1	3.0	3.1	3.0
235. *	3.0	3.0	3.2	3.1	3.0	3.0	3.0	3.1	3.1	3.0	3.1	3.0	3.0	3.0	3.0	3.1	3.1	3.0	3.1	3.0
240. *	3.0	3.0	3.2	3.1	3.0	3.0	3.0	3.1	3.1	3.0	3.1	3.0	3.0	3.0	3.0	3.1	3.1	3.0	3.1	3.0
245. *	3.0	3.0	3.2	3.1	3.0	3.0	3.0	3.1	3.1	3.0	3.1	3.0	3.0	3.0	3.0	3.1	3.1	3.0	3.1	3.0
250. *	3.0	3.0	3.2	3.1	3.0	3.0	3.0	3.1	3.1	3.0	3.1	3.0	3.0	3.0	3.0	3.1	3.1	3.0	3.1	3.0
255. *	3.0	3.0	3.2	3.1	3.0	3.0	3.0	3.2	3.1	3.0	3.1	3.0	3.0	3.0	3.0	3.1	3.1	3.0	3.1	3.0
260. *	3.0	3.1	3.2	3.1	3.0	3.0	3.0	3.2	3.1	3.0	3.1	3.0	3.0	3.0	3.0	3.1	3.1	3.0	3.1	3.0
265. *	3.1	3.1	3.2	3.1	3.0	3.0	3.0	3.1	3.1	3.0	3.1	3.1	3.0	3.0	3.0	3.1	3.1	3.0	3.1	3.1
270. *	3.1	3.1	3.2	3.1	3.0	3.0	3.0	3.1	3.1	3.0	3.1	3.1	3.0	3.0	3.0	3.1	3.1	3.0	3.1	3.1
275. *	3.1	3.1	3.2	3.1	3.0	3.0	3.0	3.0	3.1	3.0	3.1	3.1	3.0	3.0	3.1	3.0	3.1	3.0	3.1	3.1
280. *	3.1	3.2	3.1	3.0	3.0	3.0	3.1	3.0	3.1	3.0	3.0	3.1	3.0	3.0	3.2	3.0	3.1	3.0	3.0	3.1
285. *	3.1	3.2	3.1	3.0	3.0	3.0	3.1	3.0	3.1	3.0	3.0	3.1	3.0	3.0	3.2	3.0	3.1	3.0	3.0	3.1
290. *	3.1	3.2	3.1	3.0	3.0	3.0	3.1	3.0	3.1	3.0	3.0	3.1	3.0	3.0	3.2	3.0	3.1	3.0	3.0	3.1
295. *	3.1	3.1	3.1	3.0	3.0	3.0	3.2	3.0	3.1	3.0	3.0	3.1	3.0	3.0	3.2	3.0	3.1	3.0	3.0	3.1
300. *	3.1	3.0	3.1	3.0	3.0	3.0	3.2	3.0	3.1	3.0	3.0	3.1	3.0	3.0	3.2	3.0	3.1	3.0	3.0	3.1
305. *	3.1	3.0	3.1	3.0	3.0	3.0	3.2	3.0	3.1	3.0	3.0	3.1	3.0	3.0	3.2	3.0	3.1	3.0	3.0	3.1
310. *	3.1	3.0	3.1	3.0	3.0	3.0	3.2	3.0	3.1	3.0	3.0	3.1	3.0	3.0	3.2	3.0	3.1	3.0	3.0	3.1
315. *	3.1	3.1	3.1	3.0	3.0	3.0	3.2	3.0	3.1	3.0	3.0	3.1	3.0	3.0	3.2	3.0	3.1	3.0	3.0	3.1
320. *	3.1	3.1	3.1	3.0	3.0	3.0	3.2	3.0	3.1	3.0	3.0	3.1	3.0	3.0	3.2	3.0	3.1	3.0	3.0	3.1
325. *	3.1	3.2	3.1	3.0	3.0	3.0	3.2	3.0	3.1	3.0	3.0	3.1	3.0	3.0	3.2	3.0	3.1	3.0	3.0	3.1
330. *	3.1	3.3	3.1	3.0	3.0	3.0	3.2	3.0	3.1	3.0	3.0	3.1	3.0	3.0	3.2	3.0	3.1	3.0	3.0	3.1
335. *	3.1	3.3	3.1	3.0	3.0	3.0	3.2	3.0	3.1	3.0	3.0	3.1	3.0	3.1	3.2	3.0	3.1	3.0	3.0	3.1
340. *	3.1	3.3	3.1	3.0	3.0	3.0	3.2	3.0	3.1	3.0	3.0	3.1	3.0	3.0	3.2	3.0	3.1	3.0	3.0	3.1
345. *	3.1	3.3	3.2	3.0	3.0	3.1	3.2	3.0	3.2	3.0	3.0	3.1	3.0	3.0	3.2	3.0	3.2	3.0	3.0	3.1
350. *	3.2	3.3	3.2	3.1	3.0	3.1	3.2	3.0	3.2	3.1	3.0	3.1	3.0	3.0	3.2	3.0	3.2	3.1	3.0	3.1
355. *	3.2	3.3	3.1	3.1	3.0	3.1	3.2	3.0	3.1	3.1	3.0	3.1	3.0	3.0	3.2	3.0	3.1	3.1	3.0	3.1
360. *	3.2	3.3	3.1	3.1	3.1	3.1	3.2	3.0	3.1	3.1	3.0	3.1	3.0	3.0	3.2	3.0	3.1	3.1	3.0	3.1
MAX *	3.2	3.3	3.2	3.2	3.1	3.1	3.2	3.2	3.2	3.2	3.2	3.2	3.1	3.1	3.2	3.1	3.2	3.2	3.2	3.2
DEGR. *	0	0	185	10	0	0	0	255	345	10	100	60	10	190	0	85	345	10	90	75

THE HIGHEST CONCENTRATION IS 3.30 PPM AT 0 DEGREES FROM REC2 .

1

JOB: Sunport I-25 Improvement Project RUN: 1-6 PM Build Sunport NB-I25

RECEPTOR - LINK MATRIX FOR THE ANGLE PRODUCING
THE MAXIMUM CONCENTRATION FOR EACH RECEPTOR

	CO/LINK (PPM) ANGLE (DEGREES) REC1	REC2	REC3	REC4	REC5	REC6	REC7	REC8	REC9	REC10	REC11	REC12	REC13	REC14	REC15	REC16	REC17	REC18	REC19	REC20
LINK # *	0	0	185	10	0	0	0	255	345	10	100	60	10	190	0	85	345	10	90	75

1	*	0.1	0.0	0.0	0.0	0.0	0.0	0.0	0.0	0.0	0.0	0.0	0.1	0.0	0.0	0.0	0.0	0.0	0.0	0.0	0.1
2	*	0.0	0.1	0.0	0.0	0.0	0.0	0.1	0.0	0.0	0.0	0.0	0.0	0.0	0.0	0.1	0.0	0.0	0.0	0.0	0.0
3	*	0.0	0.0	0.0	0.0	0.0	0.0	0.0	0.0	0.0	0.0	0.0	0.0	0.0	0.0	0.0	0.0	0.0	0.0	0.0	0.0
4	*	0.0	0.1	0.1	0.0	0.0	0.0	0.1	0.1	0.0	0.0	0.1	0.1	0.0	0.0	0.1	0.1	0.0	0.0	0.1	0.1
5	*	0.0	0.0	0.0	0.0	0.0	0.0	0.0	0.1	0.0	0.0	0.1	0.0	0.0	0.0	0.0	0.0	0.0	0.0	0.1	0.0
6	*	0.0	0.0	0.0	0.0	0.0	0.0	0.0	0.0	0.0	0.0	0.0	0.0	0.1	0.1	0.0	0.0	0.0	0.0	0.0	0.0
7	*	0.1	0.1	0.1	0.2	0.1	0.1	0.0	0.0	0.2	0.2	0.0	0.0	0.0	0.0	0.0	0.0	0.2	0.2	0.0	0.0
8	*	0.0	0.0	0.0	0.0	0.0	0.0	0.0	0.0	0.0	0.0	0.0	0.0	0.0	0.0	0.0	0.0	0.0	0.0	0.0	0.0
9	*	0.0	0.0	0.0	0.0	0.0	0.0	0.0	0.0	0.0	0.0	0.0	0.0	0.0	0.0	0.0	0.0	0.0	0.0	0.0	0.0
10	*	0.0	0.0	0.0	0.0	0.0	0.0	0.0	0.0	0.0	0.0	0.0	0.0	0.0	0.0	0.0	0.0	0.0	0.0	0.0	0.0
11	*	0.0	0.0	0.0	0.0	0.0	0.0	0.0	0.0	0.0	0.0	0.0	0.0	0.0	0.0	0.0	0.0	0.0	0.0	0.0	0.0
12	*	0.0	0.0	0.0	0.0	0.0	0.0	0.0	0.0	0.0	0.0	0.0	0.0	0.0	0.0	0.0	0.0	0.0	0.0	0.0	0.0
13	*	0.0	0.0	0.0	0.0	0.0	0.0	0.0	0.0	0.0	0.0	0.0	0.0	0.0	0.0	0.0	0.0	0.0	0.0	0.0	0.0

RUN ENDED ON 05/12/15 AT 19:26

1 CAL3QHC (93157)
IBM-PC VERSION (2.01)

RUN NAME: 25.DAT 7777777777777777777

RUN BEGIN ON 05/12/15 AT 19:07

CAL3QHC: LINE SOURCE DISPERSION MODEL - VERSION 2.0, JANUARY 1992

JOB: Sunport I-25 Improvement Proj RUN: 2-5 PM No Build SB-I25 Sunport

SITE & METEOROLOGICAL VARIABLES

VS = 0.0 CM/S VD = 0.0 CM/S Z0 = 175. CM
U = 1.0 M/S CLAS = 4 (D) ATIM = 60. MINUTES MIXH = 1000. M AMB = 3.0 PPM

LINK VARIABLES

LINK DESCRIPTION	LINK COORDINATES (FT) X1	Y1	X2	Y2	LENGTH (FT)	BRG (DEG)	TYPE	VPH	EF (G/MI)	H (FT)	W (FT)	V/C	QUEUE (VEH)
1. WB A	1000.0	14.0	0.0	14.0	1000.	270.	AG	805.	2.1	0.0	32.0		
2. WB D	0.0	8.0	-1000.0	8.0	1000.	270.	AG	1515.	2.1	0.0	32.0		
3. WB L	1000.0	2.0	0.0	2.0	1000.	270.	AG	820.	2.1	0.0	32.0		
4. SB A	-12.0	1000.0	-12.0	0.0	1000.	180.	AG	25.	2.1	0.0	32.0		
5. SB D	-6.0	0.0	-6.0	-1000.0	1000.	180.	AG	1040.	2.1	0.0	32.0		
6. SB L	0.0	1000.0	0.0	0.0	1000.	180.	AG	905.	2.1	0.0	32.0		
7. WB L Q	12.0	2.0	204.8	2.0	193.	90.	AG	4.	100.0	0.0	12.0	0.78	9.8
8. WB T Q	12.0	14.0	12.2	14.0	0.	90.	AG	4.	100.0	0.0	12.0	0.00	0.0
9. SB L Q	0.0	20.0	0.0	3233.6	3214.	360.	AG	7.	100.0	0.0	12.0	1.44	163.3
10. SB T Q	-12.0	20.0	-12.0	29.2	9.	360.	AG	7.	100.0	0.0	12.0	0.04	0.5

1

PAGE 2

JOB: Sunport I-25 Improvement Proj RUN: 2-5 PM No Build SB-I25 Sunport

ADDITIONAL QUEUE LINK PARAMETERS

LINK DESCRIPTION	CYCLE LENGTH (SEC)	RED TIME (SEC)	CLEARANCE LOST TIME (SEC)	APPROACH VOL (VPH)	SATURATION FLOW RATE (VPH)	IDLE EM FAC (gm/hr)	SIGNAL TYPE	ARRIVAL RATE
7. WB L Q	110	43	4.5	820	1900	4.22	3	3
8. WB T Q	110	43	4.5	1	1900	4.22	3	3
9. SB L Q	110	67	4.5	905	1900	4.22	3	3
10. SB T Q	110	67	4.5	25	1900	4.22	3	3

RECEPTOR LOCATIONS

RECEPTOR	COORDINATES (FT) X	Y	Z
1. 1	-28.0	-18.0	5.0
2. 2	16.0	-24.0	5.0
3. 3	22.0	36.0	5.0
4. 4	-34.0	30.0	5.0
5. 5	-28.0	-98.0	5.0
6. 6	16.0	-104.0	5.0
7. 7	96.0	-24.0	5.0
8. 8	102.0	36.0	5.0
9. 9	22.0	116.0	5.0
10. 10	-34.0	110.0	5.0
11. 11	-114.0	30.0	5.0
12. 12	-108.0	-18.0	5.0
13. 13	-28.0	-218.0	5.0
14. 14	16.0	-224.0	5.0
15. 15	216.0	-24.0	5.0
16. 16	222.0	36.0	5.0
17. 17	22.0	236.0	5.0
18. 18	-34.0	230.0	5.0
19. 19	-234.0	30.0	5.0
20. 20	-228.0	-18.0	5.0

1

PAGE 3

JOB: Sunport I-25 Improvement Proj RUN: 2-5 PM No Build SB-I25 Sunport

MODEL RESULTS

REMARKS : In search of the angle corresponding to the maximum concentration, only the first angle, of the angles with same maximum concentrations, is indicated as maximum.

WIND ANGLE RANGE: 0.-360.

WIND ANGLE (DEGR)	CONCENTRATION (PPM) REC1	REC2	REC3	REC4	REC5	REC6	REC7	REC8	REC9	REC10	REC11	REC12	REC13	REC14	REC15	REC16	REC17	REC18	REC19	REC20
0.	3.2	3.2	3.1	3.0	3.0	3.0	3.1	3.0	3.1	3.0	3.0	3.1	3.1	3.1	3.1	3.0	3.1	3.0	3.0	3.1
5.	3.2	3.2	3.1	3.1	3.1	3.0	3.1	3.0	3.1	3.1	3.0	3.1	3.1	3.0	3.1	3.0	3.1	3.1	3.0	3.1
10.	3.2	3.2	3.0	3.1	3.1	3.0	3.1	3.0	3.0	3.1	3.0	3.1	3.1	3.0	3.1	3.0	3.0	3.1	3.0	3.1
15.	3.2	3.1	3.0	3.1	3.1	3.0	3.1	3.0	3.0	3.1	3.0	3.1	3.1	3.0	3.1	3.0	3.0	3.1	3.0	3.1
20.	3.2	3.1	3.0	3.1	3.1	3.0	3.1	3.0	3.0	3.1	3.0	3.1	3.1	3.0	3.1	3.0	3.0	3.1	3.0	3.1
25.	3.2	3.1	3.0	3.1	3.1	3.0	3.1	3.0	3.0	3.1	3.0	3.1	3.1	3.0	3.1	3.0	3.0	3.1	3.0	3.1
30.	3.2	3.1	3.0	3.1	3.1	3.0	3.1	3.0	3.0	3.1	3.0	3.1	3.1	3.0	3.1	3.0	3.0	3.1	3.0	3.1

35. *	3.2	3.1	3.0	3.1	3.1	3.0	3.1	3.0	3.0	3.1	3.0	3.1	3.1	3.0	3.1	3.0	3.0	3.1	3.0	3.1
40. *	3.1	3.1	3.0	3.1	3.1	3.0	3.1	3.0	3.0	3.1	3.0	3.1	3.1	3.0	3.1	3.0	3.0	3.1	3.0	3.1
45. *	3.1	3.1	3.0	3.1	3.1	3.0	3.1	3.0	3.0	3.1	3.0	3.1	3.1	3.0	3.1	3.0	3.0	3.1	3.0	3.1
50. *	3.1	3.1	3.0	3.1	3.1	3.0	3.1	3.0	3.0	3.1	3.0	3.1	3.1	3.0	3.1	3.0	3.0	3.1	3.0	3.1
55. *	3.1	3.1	3.0	3.1	3.1	3.0	3.1	3.0	3.0	3.1	3.0	3.1	3.1	3.0	3.1	3.0	3.0	3.1	3.0	3.1
60. *	3.1	3.2	3.0	3.1	3.1	3.0	3.2	3.0	3.0	3.1	3.0	3.1	3.1	3.0	3.2	3.0	3.0	3.1	3.0	3.1
65. *	3.3	3.2	3.0	3.1	3.1	3.0	3.2	3.0	3.0	3.1	3.0	3.1	3.1	3.0	3.2	3.0	3.0	3.1	3.0	3.1
70. *	3.3	3.2	3.0	3.1	3.1	3.0	3.2	3.0	3.0	3.1	3.0	3.1	3.1	3.0	3.2	3.0	3.0	3.1	3.0	3.1
75. *	3.3	3.2	3.0	3.0	3.1	3.0	3.2	3.0	3.0	3.0	3.0	3.1	3.1	3.0	3.2	3.0	3.0	3.0	3.0	3.1
80. *	3.3	3.2	3.0	3.0	3.1	3.0	3.2	3.0	3.0	3.0	3.0	3.1	3.1	3.0	3.2	3.0	3.0	3.0	3.0	3.1
85. *	3.3	3.1	3.1	3.1	3.1	3.0	3.1	3.1	3.0	3.0	3.0	3.1	3.1	3.0	3.1	3.1	3.0	3.0	3.1	3.1
90. *	3.2	3.1	3.1	3.2	3.1	3.0	3.1	3.1	3.0	3.0	3.1	3.0	3.1	3.0	3.1	3.1	3.0	3.0	3.1	3.1
95. *	3.2	3.0	3.2	3.2	3.1	3.0	3.0	3.2	3.0	3.0	3.1	3.0	3.1	3.0	3.0	3.2	3.0	3.0	3.1	3.0
100. *	3.1	3.0	3.2	3.2	3.1	3.0	3.0	3.2	3.0	3.0	3.1	3.0	3.1	3.0	3.0	3.2	3.0	3.0	3.1	3.0
105. *	3.1	3.0	3.2	3.2	3.1	3.0	3.0	3.2	3.0	3.0	3.1	3.0	3.1	3.0	3.0	3.2	3.0	3.0	3.1	3.0
110. *	3.1	3.0	3.2	3.3	3.1	3.0	3.0	3.2	3.0	3.0	3.1	3.0	3.1	3.0	3.0	3.2	3.0	3.1	3.1	3.0
115. *	3.1	3.0	3.2	3.1	3.1	3.0	3.0	3.2	3.0	3.1	3.1	3.0	3.1	3.0	3.0	3.2	3.0	3.1	3.1	3.0
120. *	3.1	3.0	3.2	3.1	3.1	3.0	3.0	3.2	3.0	3.1	3.1	3.0	3.1	3.0	3.0	3.2	3.0	3.1	3.1	3.0
125. *	3.1	3.0	3.2	3.1	3.1	3.0	3.0	3.2	3.0	3.1	3.1	3.0	3.1	3.0	3.0	3.2	3.0	3.1	3.1	3.0
130. *	3.1	3.0	3.2	3.1	3.1	3.0	3.0	3.2	3.0	3.1	3.1	3.0	3.1	3.0	3.0	3.2	3.0	3.1	3.1	3.0
135. *	3.1	3.0	3.2	3.1	3.1	3.0	3.0	3.2	3.0	3.1	3.1	3.0	3.1	3.0	3.0	3.2	3.0	3.1	3.1	3.0
140. *	3.1	3.0	3.1	3.1	3.1	3.0	3.0	3.1	3.0	3.1	3.1	3.0	3.1	3.0	3.0	3.1	3.0	3.1	3.1	3.0
145. *	3.1	3.0	3.1	3.1	3.1	3.0	3.0	3.1	3.0	3.1	3.1	3.0	3.1	3.0	3.0	3.1	3.0	3.1	3.1	3.0
150. *	3.1	3.0	3.1	3.2	3.1	3.0	3.0	3.1	3.0	3.1	3.1	3.0	3.1	3.0	3.0	3.1	3.0	3.1	3.1	3.0
155. *	3.1	3.0	3.1	3.2	3.1	3.0	3.0	3.1	3.0	3.0	3.1	3.0	3.1	3.0	3.0	3.1	3.0	3.1	3.1	3.0
160. *	3.1	3.0	3.1	3.2	3.1	3.0	3.0	3.1	3.0	3.0	3.1	3.0	3.1	3.0	3.0	3.1	3.0	3.1	3.1	3.0
165. *	3.1	3.0	3.1	3.2	3.1	3.0	3.0	3.1	3.0	3.0	3.1	3.0	3.1	3.0	3.0	3.1	3.0	3.1	3.1	3.0
170. *	3.1	3.0	3.1	3.2	3.1	3.0	3.0	3.1	3.0	3.0	3.1	3.0	3.1	3.0	3.0	3.1	3.0	3.0	3.1	3.0
175. *	3.1	3.1	3.1	3.2	3.1	3.1	3.0	3.1	3.0	3.1	3.1	3.0	3.1	3.1	3.0	3.1	3.0	3.0	3.1	3.0
180. *	3.1	3.1	3.2	3.2	3.1	3.1	3.0	3.1	3.0	3.0	3.1	3.0	3.1	3.1	3.0	3.1	3.1	3.0	3.1	3.0
185. *	3.1	3.1	3.2	3.2	3.1	3.1	3.0	3.1	3.1	3.0	3.1	3.0	3.1	3.1	3.0	3.1	3.1	3.0	3.1	3.0
190. *	3.0	3.1	3.2	3.1	3.0	3.1	3.0	3.1	3.1	3.0	3.1	3.0	3.0	3.1	3.0	3.1	3.1	3.0	3.1	3.0
195. *	3.0	3.1	3.2	3.1	3.0	3.1	3.0	3.1	3.1	3.0	3.1	3.0	3.0	3.1	3.0	3.1	3.1	3.0	3.1	3.0
200. *	3.0	3.1	3.2	3.1	3.0	3.1	3.0	3.1	3.1	3.0	3.1	3.0	3.0	3.1	3.0	3.1	3.1	3.0	3.1	3.0
205. *	3.0	3.1	3.1	3.1	3.0	3.1	3.0	3.1	3.1	3.0	3.1	3.0	3.0	3.1	3.0	3.1	3.1	3.0	3.1	3.0

1

JOB: Sunport I-25 Improvement Proj RUN: 2-5 PM No Build SB-I25 Sunport

WIND ANGLE (DEGR) *	CONCENTRATION (PPM) REC1	REC2	REC3	REC4	REC5	REC6	REC7	REC8	REC9	REC10	REC11	REC12	REC13	REC14	REC15	REC16	REC17	REC18	REC19	REC20
210. *	3.0	3.1	3.1	3.1	3.0	3.1	3.0	3.1	3.1	3.0	3.1	3.0	3.0	3.1	3.0	3.1	3.1	3.0	3.1	3.0
215. *	3.0	3.1	3.1	3.1	3.0	3.1	3.0	3.1	3.1	3.0	3.1	3.0	3.0	3.1	3.0	3.1	3.1	3.0	3.1	3.0
220. *	3.0	3.1	3.2	3.1	3.0	3.1	3.0	3.1	3.1	3.0	3.1	3.0	3.0	3.1	3.0	3.1	3.1	3.0	3.1	3.0
225. *	3.0	3.1	3.2	3.1	3.0	3.1	3.0	3.1	3.1	3.0	3.1	3.0	3.0	3.1	3.0	3.2	3.1	3.0	3.1	3.0
230. *	3.0	3.1	3.2	3.1	3.0	3.1	3.0	3.1	3.1	3.0	3.1	3.0	3.0	3.1	3.0	3.2	3.1	3.0	3.1	3.0
235. *	3.0	3.1	3.2	3.1	3.0	3.1	3.0	3.1	3.1	3.0	3.1	3.0	3.0	3.1	3.0	3.2	3.1	3.0	3.1	3.0
240. *	3.0	3.1	3.2	3.1	3.0	3.1	3.0	3.1	3.1	3.0	3.1	3.0	3.0	3.1	3.0	3.2	3.1	3.0	3.1	3.0
245. *	3.0	3.1	3.2	3.2	3.0	3.1	3.0	3.1	3.1	3.1	3.2	3.0	3.0	3.1	3.0	3.2	3.1	3.0	3.2	3.0
250. *	3.0	3.1	3.2	3.2	3.0	3.1	3.0	3.1	3.1	3.1	3.2	3.0	3.0	3.1	3.0	3.2	3.1	3.0	3.2	3.0
255. *	3.0	3.1	3.2	3.2	3.0	3.1	3.0	3.2	3.1	3.0	3.2	3.0	3.0	3.1	3.0	3.1	3.1	3.0	3.2	3.0
260. *	3.1	3.1	3.2	3.2	3.0	3.1	3.0	3.2	3.1	3.0	3.2	3.1	3.0	3.1	3.0	3.1	3.1	3.0	3.2	3.0
265. *	3.1	3.2	3.2	3.2	3.0	3.1	3.1	3.1	3.1	3.0	3.2	3.1	3.0	3.1	3.0	3.1	3.1	3.0	3.2	3.1
270. *	3.1	3.2	3.2	3.1	3.0	3.1	3.1	3.1	3.1	3.0	3.1	3.1	3.0	3.1	3.0	3.0	3.1	3.0	3.1	3.1
275. *	3.1	3.2	3.2	3.1	3.0	3.1	3.1	3.1	3.1	3.0	3.1	3.1	3.0	3.1	3.0	3.0	3.1	3.0	3.1	3.1
280. *	3.1	3.2	3.1	3.1	3.0	3.1	3.1	3.0	3.1	3.0	3.1	3.1	3.0	3.1	3.1	3.0	3.1	3.0	3.1	3.1
285. *	3.1	3.2	3.1	3.0	3.0	3.1	3.1	3.0	3.1	3.0	3.0	3.1	3.0	3.1	3.1	3.0	3.1	3.0	3.0	3.1
290. *	3.1	3.2	3.1	3.0	3.0	3.1	3.2	3.0	3.1	3.0	3.0	3.1	3.0	3.1	3.1	3.0	3.1	3.0	3.0	3.1
295. *	3.1	3.2	3.1	3.0	3.0	3.1	3.1	3.0	3.1	3.0	3.0	3.1	3.0	3.1	3.1	3.0	3.1	3.0	3.0	3.1
300. *	3.1	3.2	3.1	3.0	3.0	3.1	3.1	3.0	3.1	3.0	3.0	3.1	3.0	3.1	3.1	3.0	3.1	3.0	3.0	3.1
305. *	3.1	3.2	3.1	3.0	3.0	3.1	3.1	3.0	3.1	3.0	3.0	3.1	3.0	3.1	3.1	3.0	3.1	3.0	3.0	3.1
310. *	3.1	3.2	3.1	3.0	3.0	3.1	3.1	3.0	3.1	3.0	3.0	3.1	3.0	3.1	3.1	3.0	3.1	3.0	3.0	3.1
315. *	3.1	3.1	3.1	3.0	3.0	3.1	3.1	3.0	3.1	3.0	3.0	3.1	3.0	3.1	3.1	3.0	3.1	3.0	3.0	3.1
320. *	3.1	3.1	3.1	3.0	3.0	3.1	3.1	3.0	3.1	3.0	3.0	3.1	3.0	3.1	3.1	3.0	3.1	3.0	3.0	3.1
325. *	3.1	3.1	3.1	3.0	3.0	3.1	3.1	3.0	3.1	3.0	3.0	3.1	3.0	3.1	3.1	3.0	3.1	3.0	3.0	3.1
330. *	3.1	3.1	3.1	3.0	3.0	3.1	3.1	3.0	3.1	3.0	3.0	3.1	3.0	3.1	3.1	3.0	3.1	3.0	3.0	3.1
335. *	3.1	3.1	3.1	3.0	3.0	3.1	3.1	3.0	3.1	3.0	3.0	3.1	3.0	3.1	3.1	3.0	3.1	3.0	3.0	3.1
340. *	3.1	3.1	3.1	3.0	3.0	3.1	3.1	3.0	3.1	3.0	3.0	3.1	3.0	3.1	3.1	3.0	3.1	3.0	3.0	3.1
345. *	3.1	3.1	3.1	3.0	3.0	3.1	3.1	3.0	3.1	3.0	3.0	3.1	3.0	3.1	3.1	3.0	3.1	3.0	3.0	3.1
350. *	3.1	3.1	3.1	3.0	3.0	3.1	3.1	3.0	3.1	3.0	3.0	3.1	3.0	3.1	3.1	3.0	3.1	3.0	3.0	3.1
355. *	3.1	3.1	3.1	3.0	3.0	3.1	3.1	3.0	3.1	3.0	3.0	3.1	3.0	3.1	3.1	3.0	3.1	3.0	3.0	3.1
360. *	3.2	3.2	3.1	3.0	3.0	3.0	3.1	3.0	3.1	3.0	3.0	3.1	3.1	3.1	3.1	3.0	3.1	3.0	3.0	3.1
MAX *	3.3	3.2	3.2	3.3	3.1	3.1	3.2	3.2	3.1	3.1	3.2	3.1	3.1	3.1	3.2	3.2	3.1	3.1	3.2	3.1
DEGR. *	65	0	95	110	5	175	60	95	0	5	245	0	0	0	60	95	0	5	245	0

THE HIGHEST CONCENTRATION IS 3.30 PPM AT 65 DEGREES FROM REC1 .

1

JOB: Sunport I-25 Improvement Proj RUN: 2-5 PM No Build SB-I25 Sunport

RECEPTOR - LINK MATRIX FOR THE ANGLE PRODUCING
THE MAXIMUM CONCENTRATION FOR EACH RECEPTOR

CO/LINK (PPM)
ANGLE (DEGREES)

LINK #	REC1	REC2	REC3	REC4	REC5	REC6	REC7	REC8	REC9	REC10	REC11	REC12	REC13	REC14	REC15	REC16	REC17	REC18	REC19	REC20
	65	0	95	110	5	175	60	95	0	5	245	0	0	0	60	95	0	5	245	0
1	0.1	0.0	0.1	0.1	0.0	0.0	0.1	0.1	0.0	0.0	0.0	0.0	0.0	0.0	0.1	0.1	0.0	0.0	0.0	0.0
2	0.0	0.0	0.0	0.1	0.0	0.0	0.0	0.0	0.0	0.0	0.2	0.1	0.0	0.0	0.0	0.0	0.0	0.0	0.2	0.1
3	0.1	0.1	0.1	0.1	0.0	0.0	0.1	0.1	0.0	0.0	0.0	0.0	0.0	0.0	0.1	0.1	0.0	0.0	0.0	0.0
4	0.0	0.0	0.0	0.0	0.0	0.0	0.0	0.0	0.0	0.0	0.0	0.0	0.0	0.0	0.0	0.0	0.0	0.0	0.0	0.0

5	*	0.1	0.0	0.0	0.0	0.1	0.1	0.0	0.0	0.0	0.0	0.0	0.0	0.1	0.1	0.0	0.0	0.0	0.0	0.0	0.0
6	*	0.0	0.1	0.0	0.0	0.0	0.0	0.0	0.0	0.1	0.1	0.0	0.0	0.0	0.0	0.0	0.0	0.1	0.1	0.0	0.0
7	*	0.0	0.0	0.0	0.0	0.0	0.0	0.0	0.0	0.0	0.0	0.0	0.0	0.0	0.0	0.0	0.0	0.0	0.0	0.0	0.0
8	*	0.0	0.0	0.0	0.0	0.0	0.0	0.0	0.0	0.0	0.0	0.0	0.0	0.0	0.0	0.0	0.0	0.0	0.0	0.0	0.0
9	*	0.0	0.0	0.0	0.0	0.0	0.0	0.0	0.0	0.0	0.0	0.0	0.0	0.0	0.0	0.0	0.0	0.0	0.0	0.0	0.0
10	*	0.0	0.0	0.0	0.0	0.0	0.0	0.0	0.0	0.0	0.0	0.0	0.0	0.0	0.0	0.0	0.0	0.0	0.0	0.0	0.0

RUN ENDED ON 05/12/15 AT 19:08

1 CAL3QHC (93157)
IBM-PC VERSION (2.01)

RUN NAME: 26.DAT 1010101010101010101010101010101010101010

RUN BEGIN ON 05/12/15 AT 19:08

CAL3QHC: LINE SOURCE DISPERSION MODEL - VERSION 2.0, JANUARY 1992

JOB: Sunport I-25 Improvement Proj RUN: 2-6 PM Build Sunport SB-I25

SITE & METEOROLOGICAL VARIABLES

VS = 0.0 CM/S VD = 0.0 CM/S Z0 = 175. CM
U = 1.0 M/S CLAS = 4 (D) ATIM = 60. MINUTES MIXH = 1000. M AMB = 3.0 PPM

LINK VARIABLES

LINK DESCRIPTION	LINK COORDINATES (FT) X1	Y1	X2	Y2	LENGTH (FT)	BRG (DEG)	TYPE	VPH	EF (G/MI)	H (FT)	W (FT)	V/C	QUEUE (VEH)
1. EB A	-1000.0	-20.0	0.0	-20.0	1000.	90.	AG	805.	2.1	0.0	68.0		
2. EB D	0.0	-32.0	1000.0	-32.0	1000.	90.	AG	1400.	2.1	0.0	56.0		
3. WB A	1000.0	26.0	0.0	26.0	1000.	270.	AG	1205.	2.1	0.0	44.0		
4. WB D	0.0	14.0	-1000.0	14.0	1000.	270.	AG	1600.	2.1	0.0	44.0		
5. WB L	0.0	2.0	-1000.0	2.0	1000.	270.	AG	385.	2.1	0.0	44.0		
6. SB A	-18.0	1000.0	-18.0	0.0	1000.	180.	AG	420.	2.1	0.0	44.0		
7. SB D	-6.0	0.0	-6.0	-1000.0	1000.	180.	AG	605.	2.1	0.0	32.0		
8. SB L	0.0	1000.0	0.0	0.0	1000.	180.	AG	790.	2.1	0.0	44.0		
9. EB T Q	-18.0	-20.0	-87.9	-20.0	70.	270.	AG	19.	100.0	0.0	36.0	0.29	3.6
10. EB R Q	-18.0	-44.0	-85.2	-44.0	67.	270.	AG	6.	100.0	0.0	12.0	0.28	3.4
11. WB L Q	18.0	2.0	293.5	2.1	276.	90.	AG	19.	100.0	0.0	24.0	1.06	14.0
12. WB T Q	18.0	26.0	169.4	26.0	151.	90.	AG	9.	100.0	0.0	24.0	0.61	7.7
13. SB L Q	0.0	32.0	0.0	170.2	138.	360.	AG	13.	100.0	0.0	24.0	0.58	7.0
14. SB T Q	-18.0	32.0	-18.0	40.7	9.	360.	AG	7.	100.0	0.0	12.0	0.04	0.4
15. SB R Q	-30.0	32.0	-30.0	170.2	138.	360.	AG	7.	100.0	0.0	12.0	0.58	7.0

1

JOB: Sunport I-25 Improvement Proj RUN: 2-6 PM Build Sunport SB-I25

ADDITIONAL QUEUE LINK PARAMETERS

LINK DESCRIPTION	CYCLE LENGTH (SEC)	RED TIME (SEC)	CLEARANCE LOST TIME (SEC)	APPROACH VOL (VPH)	SATURATION FLOW RATE (VPH)	IDLE EM FAC (gm/hr)	SIGNAL TYPE	ARRIVAL RATE
9. EB T Q	110	63	4.5	610	1900	4.22	3	3
10. EB R Q	110	63	4.5	195	1900	4.22	3	3
11. WB L Q	110	93	4.5	385	1900	4.22	3	3
12. WB T Q	110	46	4.5	1205	1900	4.22	3	3
13. SB L Q	110	64	4.5	790	1900	4.22	3	3
14. SB T Q	110	64	4.5	25	1900	4.22	3	3
15. SB R Q	110	64	4.5	395	1900	4.22	3	3

RECEPTOR LOCATIONS

RECEPTOR	COORDINATES (FT) X	Y	Z
1. 1	-28.0	-66.0	5.0
2. 2	16.0	-66.0	5.0
3. 3	28.0	54.0	5.0
4. 4	-52.0	42.0	5.0
5. 5	-28.0	-146.0	5.0
6. 6	16.0	-146.0	5.0
7. 7	96.0	-66.0	5.0
8. 8	108.0	54.0	5.0
9. 9	28.0	134.0	5.0
10. 10	-52.0	122.0	5.0
11. 11	-132.0	42.0	5.0
12. 12	-108.0	-66.0	5.0
13. 13	-28.0	-266.0	5.0
14. 14	16.0	-266.0	5.0
15. 15	216.0	-66.0	5.0
16. 16	228.0	54.0	5.0
17. 17	28.0	254.0	5.0
18. 18	-52.0	242.0	5.0
19. 19	-252.0	42.0	5.0
20. 20	-228.0	-66.0	5.0

1

JOB: Sunport I-25 Improvement Proj RUN: 2-6 PM Build Sunport SB-I25

MODEL RESULTS

REMARKS : In search of the angle corresponding to the maximum concentration, only the first angle, of the angles with same maximum concentrations, is indicated as maximum.

WIND ANGLE RANGE: 0.-360.

WIND ANGLE (DEGR)	CONCENTRATION (PPM) REC1	REC2	REC3	REC4	REC5	REC6	REC7	REC8	REC9	REC10	REC11	REC12	REC13	REC14	REC15	REC16	REC17	REC18	REC19	REC20

0.	3.1	3.2	3.1	3.0	3.0	3.0	3.1	3.0	3.1	3.0	3.0	3.1	3.0	3.0	3.1	3.0	3.1	3.0	3.0	3.1
5.	3.1	3.1	3.0	3.0	3.0	3.0	3.1	3.0	3.0	3.0	3.0	3.1	3.0	3.0	3.1	3.0	3.0	3.0	3.0	3.1
10.	3.1	3.1	3.0	3.0	3.0	3.0	3.1	3.0	3.0	3.0	3.0	3.1	3.1	3.0	3.1	3.0	3.0	3.0	3.0	3.1
15.	3.0	3.1	3.0	3.0	3.1	3.0	3.1	3.0	3.0	3.0	3.0	3.1	3.1	3.0	3.1	3.0	3.0	3.0	3.0	3.1
20.	3.0	3.1	3.0	3.0	3.1	3.0	3.1	3.0	3.0	3.0	3.0	3.1	3.1	3.0	3.1	3.0	3.0	3.0	3.0	3.1
25.	3.0	3.1	3.0	3.0	3.1	3.0	3.1	3.0	3.0	3.0	3.0	3.1	3.1	3.0	3.1	3.0	3.0	3.0	3.0	3.1
30.	3.0	3.1	3.0	3.0	3.1	3.0	3.1	3.0	3.0	3.0	3.0	3.1	3.1	3.0	3.1	3.0	3.0	3.0	3.0	3.1
35.	3.0	3.1	3.0	3.0	3.1	3.0	3.1	3.0	3.0	3.0	3.0	3.1	3.1	3.0	3.1	3.0	3.0	3.0	3.0	3.1
40.	3.0	3.1	3.0	3.0	3.1	3.0	3.1	3.0	3.0	3.0	3.0	3.0	3.1	3.0	3.1	3.0	3.0	3.0	3.0	3.1
45.	3.1	3.1	3.0	3.0	3.0	3.0	3.1	3.0	3.0	3.0	3.0	3.0	3.0	3.0	3.1	3.0	3.0	3.0	3.0	3.2
50.	3.1	3.1	3.0	3.0	3.0	3.0	3.1	3.0	3.0	3.0	3.0	3.0	3.0	3.0	3.1	3.0	3.0	3.0	3.0	3.2
55.	3.1	3.1	3.0	3.0	3.0	3.0	3.1	3.0	3.0	3.0	3.0	3.0	3.0	3.0	3.1	3.0	3.0	3.0	3.0	3.2
60.	3.1	3.1	3.0	3.0	3.1	3.0	3.1	3.0	3.0	3.0	3.0	3.0	3.0	3.0	3.1	3.0	3.0	3.0	3.0	3.2
65.	3.1	3.1	3.0	3.0	3.1	3.1	3.1	3.0	3.0	3.0	3.0	3.0	3.0	3.0	3.1	3.0	3.0	3.0	3.0	3.1
70.	3.1	3.1	3.0	3.0	3.1	3.1	3.1	3.0	3.0	3.0	3.0	3.0	3.0	3.0	3.1	3.0	3.0	3.0	3.0	3.1
75.	3.1	3.1	3.0	3.0	3.0	3.0	3.1	3.0	3.0	3.0	3.0	3.1	3.0	3.0	3.1	3.0	3.0	3.0	3.0	3.1
80.	3.1	3.1	3.0	3.1	3.0	3.0	3.1	3.0	3.0	3.0	3.0	3.1	3.0	3.0	3.1	3.0	3.0	3.0	3.0	3.0
85.	3.1	3.1	3.1	3.1	3.0	3.0	3.1	3.1	3.0	3.0	3.0	3.1	3.0	3.0	3.1	3.1	3.0	3.0	3.1	3.0
90.	3.1	3.1	3.1	3.1	3.0	3.0	3.1	3.1	3.0	3.0	3.2	3.1	3.0	3.0	3.1	3.1	3.0	3.0	3.1	3.0
95.	3.1	3.1	3.1	3.2	3.0	3.0	3.1	3.1	3.0	3.0	3.3	3.1	3.0	3.0	3.1	3.1	3.0	3.0	3.1	3.0
100.	3.0	3.1	3.2	3.3	3.0	3.0	3.1	3.2	3.0	3.0	3.3	3.0	3.0	3.0	3.1	3.2	3.0	3.0	3.1	3.0
105.	3.0	3.0	3.2	3.3	3.0	3.0	3.0	3.2	3.0	3.0	3.2	3.0	3.0	3.0	3.0	3.2	3.0	3.0	3.1	3.0
110.	3.0	3.0	3.2	3.3	3.0	3.0	3.0	3.2	3.0	3.0	3.1	3.0	3.0	3.0	3.0	3.2	3.0	3.0	3.1	3.0
115.	3.0	3.0	3.2	3.2	3.0	3.0	3.0	3.2	3.0	3.0	3.1	3.0	3.0	3.0	3.0	3.2	3.0	3.0	3.1	3.0
120.	3.0	3.0	3.2	3.2	3.0	3.0	3.0	3.2	3.0	3.0	3.1	3.0	3.0	3.0	3.0	3.2	3.0	3.0	3.1	3.0
125.	3.0	3.0	3.2	3.2	3.0	3.0	3.0	3.2	3.0	3.0	3.1	3.0	3.0	3.0	3.0	3.2	3.0	3.0	3.1	3.0
130.	3.0	3.0	3.2	3.1	3.0	3.0	3.0	3.2	3.0	3.0	3.1	3.0	3.0	3.0	3.0	3.2	3.0	3.0	3.1	3.0
135.	3.0	3.0	3.2	3.1	3.0	3.0	3.0	3.2	3.0	3.0	3.1	3.0	3.0	3.0	3.0	3.2	3.0	3.0	3.1	3.0
140.	3.1	3.0	3.2	3.1	3.1	3.0	3.0	3.2	3.0	3.0	3.1	3.0	3.1	3.0	3.0	3.2	3.0	3.0	3.1	3.0
145.	3.1	3.0	3.2	3.1	3.1	3.0	3.0	3.2	3.0	3.0	3.1	3.0	3.1	3.0	3.0	3.2	3.0	3.0	3.1	3.0
150.	3.1	3.0	3.2	3.1	3.1	3.0	3.0	3.2	3.0	3.0	3.1	3.0	3.1	3.0	3.0	3.2	3.0	3.0	3.1	3.0
155.	3.1	3.0	3.2	3.1	3.1	3.0	3.0	3.2	3.0	3.0	3.1	3.0	3.1	3.0	3.0	3.2	3.0	3.0	3.1	3.0
160.	3.1	3.0	3.2	3.1	3.1	3.0	3.0	3.2	3.0	3.0	3.1	3.0	3.1	3.0	3.0	3.2	3.0	3.0	3.1	3.0
165.	3.1	3.0	3.2	3.1	3.1	3.0	3.0	3.2	3.0	3.0	3.1	3.0	3.1	3.0	3.0	3.2	3.0	3.0	3.1	3.0
170.	3.1	3.0	3.1	3.1	3.1	3.0	3.0	3.2	3.0	3.0	3.1	3.0	3.1	3.0	3.0	3.2	3.0	3.0	3.1	3.0
175.	3.1	3.0	3.1	3.1	3.1	3.0	3.0	3.2	3.0	3.0	3.1	3.0	3.1	3.0	3.0	3.2	3.0	3.0	3.1	3.0
180.	3.1	3.1	3.1	3.1	3.1	3.1	3.0	3.2	3.0	3.0	3.1	3.0	3.1	3.1	3.0	3.2	3.0	3.0	3.1	3.0
185.	3.0	3.1	3.1	3.1	3.0	3.1	3.0	3.2	3.0	3.0	3.1	3.0	3.0	3.1	3.0	3.2	3.1	3.0	3.1	3.0
190.	3.0	3.1	3.1	3.1	3.0	3.1	3.0	3.2	3.1	3.0	3.1	3.0	3.0	3.1	3.0	3.2	3.1	3.0	3.1	3.0
195.	3.0	3.1	3.1	3.1	3.0	3.1	3.0	3.2	3.1	3.0	3.1	3.0	3.0	3.1	3.0	3.2	3.1	3.0	3.1	3.0
200.	3.0	3.1	3.1	3.1	3.0	3.1	3.0	3.2	3.1	3.0	3.1	3.0	3.0	3.1	3.0	3.2	3.1	3.0	3.1	3.0
205.	3.0	3.1	3.1	3.1	3.0	3.1	3.0	3.2	3.1	3.0	3.1	3.0	3.0	3.1	3.0	3.2	3.1	3.0	3.1	3.0

1

JOB: Sunport I-25 Improvement Proj RUN: 2-6 PM Build Sunport SB-I25

WIND ANGLE (DEGR)	CONCENTRATION (PPM) REC1	REC2	REC3	REC4	REC5	REC6	REC7	REC8	REC9	REC10	REC11	REC12	REC13	REC14	REC15	REC16	REC17	REC18	REC19	REC20
210.	3.0	3.1	3.1	3.1	3.0	3.1	3.0	3.1	3.1	3.0	3.1	3.0	3.0	3.1	3.0	3.2	3.1	3.0	3.1	3.0
215.	3.0	3.1	3.1	3.1	3.0	3.1	3.0	3.1	3.1	3.0	3.1	3.0	3.0	3.1	3.0	3.2	3.1	3.0	3.1	3.0
220.	3.0	3.1	3.3	3.1	3.0	3.1	3.0	3.1	3.1	3.0	3.1	3.0	3.0	3.1	3.0	3.2	3.1	3.0	3.1	3.0
225.	3.0	3.0	3.3	3.1	3.0	3.0	3.0	3.1	3.1	3.1	3.1	3.0	3.0	3.0	3.0	3.2	3.1	3.0	3.1	3.0
230.	3.0	3.0	3.2	3.1	3.0	3.0	3.0	3.1	3.1	3.1	3.1	3.0	3.0	3.0	3.0	3.2	3.1	3.0	3.1	3.0
235.	3.0	3.0	3.2	3.1	3.0	3.0	3.0	3.1	3.1	3.1	3.1	3.0	3.0	3.0	3.0	3.2	3.1	3.0	3.1	3.0
240.	3.0	3.0	3.2	3.1	3.0	3.0	3.0	3.1	3.2	3.1	3.1	3.0	3.0	3.0	3.0	3.1	3.1	3.0	3.1	3.0
245.	3.0	3.0	3.1	3.3	3.0	3.0	3.0	3.1	3.2	3.1	3.3	3.0	3.0	3.0	3.0	3.1	3.1	3.0	3.2	3.0
250.	3.0	3.0	3.1	3.3	3.0	3.0	3.0	3.2	3.1	3.1	3.3	3.0	3.0	3.0	3.0	3.1	3.1	3.0	3.3	3.0
255.	3.0	3.0	3.1	3.3	3.0	3.0	3.0	3.2	3.0	3.1	3.3	3.0	3.0	3.0	3.0	3.1	3.1	3.0	3.2	3.0
260.	3.0	3.0	3.2	3.2	3.0	3.0	3.0	3.2	3.1	3.0	3.2	3.0	3.0	3.0	3.0	3.1	3.1	3.0	3.2	3.0
265.	3.0	3.0	3.2	3.2	3.0	3.0	3.0	3.2	3.1	3.0	3.2	3.0	3.0	3.0	3.0	3.2	3.1	3.0	3.2	3.0
270.	3.0	3.0	3.2	3.1	3.0	3.0	3.0	3.1	3.1	3.0	3.1	3.0	3.0	3.0	3.1	3.1	3.1	3.0	3.1	3.0
275.	3.2	3.2	3.2	3.1	3.0	3.0	3.2	3.1	3.1	3.0	3.1	3.1	3.0	3.0	3.1	3.0	3.1	3.0	3.1	3.1
280.	3.2	3.2	3.1	3.1	3.0	3.0	3.2	3.0	3.1	3.0	3.1	3.2	3.0	3.0	3.1	3.0	3.1	3.0	3.1	3.2
285.	3.2	3.2	3.1	3.0	3.0	3.0	3.2	3.0	3.1	3.0	3.0	3.2	3.0	3.0	3.1	3.0	3.1	3.0	3.0	3.2
290.	3.2	3.2	3.1	3.0	3.0	3.0	3.2	3.0	3.1	3.0	3.0	3.2	3.0	3.0	3.1	3.0	3.1	3.0	3.0	3.2
295.	3.2	3.2	3.1	3.0	3.0	3.0	3.2	3.0	3.1	3.0	3.0	3.2	3.0	3.0	3.1	3.0	3.1	3.0	3.0	3.2
300.	3.2	3.2	3.1	3.0	3.0	3.0	3.1	3.0	3.1	3.0	3.0	3.2	3.0	3.0	3.1	3.0	3.1	3.0	3.0	3.2
305.	3.2	3.1	3.1	3.0	3.0	3.0	3.1	3.0	3.1	3.0	3.0	3.2	3.0	3.0	3.1	3.0	3.1	3.0	3.0	3.2
310.	3.2	3.1	3.1	3.0	3.0	3.0	3.1	3.0	3.1	3.0	3.0	3.2	3.0	3.0	3.1	3.0	3.1	3.0	3.0	3.2
315.	3.2	3.1	3.1	3.0	3.0	3.0	3.1	3.0	3.1	3.0	3.0	3.2	3.0	3.0	3.1	3.0	3.1	3.0	3.0	3.2
320.	3.1	3.1	3.1	3.0	3.0	3.1	3.1	3.0	3.1	3.0	3.0	3.1	3.0	3.1	3.1	3.0	3.1	3.0	3.0	3.1
325.	3.1	3.1	3.1	3.0	3.0	3.1	3.1	3.0	3.1	3.0	3.0	3.1	3.0	3.1	3.1	3.0	3.1	3.0	3.0	3.1
330.	3.1	3.0	3.1	3.0	3.0	3.1	3.1	3.0	3.1	3.0	3.0	3.1	3.0	3.1	3.1	3.0	3.1	3.0	3.0	3.1
335.	3.1	3.0	3.1	3.0	3.0	3.1	3.1	3.0	3.1	3.0	3.0	3.1	3.0	3.1	3.1	3.0	3.1	3.0	3.0	3.1
340.	3.1	3.1	3.1	3.0	3.0	3.1	3.1	3.0	3.1	3.0	3.0	3.1	3.0	3.1	3.1	3.0	3.1	3.0	3.0	3.1
345.	3.1	3.1	3.1	3.0	3.0	3.1	3.1	3.0	3.1	3.0	3.0	3.1	3.0	3.1	3.1	3.0	3.1	3.0	3.0	3.1
350.	3.1	3.2	3.1	3.0	3.0	3.0	3.1	3.0	3.1	3.0	3.0	3.1	3.0	3.1	3.1	3.0	3.1	3.0	3.0	3.1
355.	3.1	3.2	3.1	3.0	3.0	3.0	3.1	3.0	3.1	3.0	3.0	3.1	3.0	3.0	3.1	3.0	3.1	3.0	3.0	3.1
360.	3.1	3.2	3.1	3.0	3.0	3.0	3.1	3.0	3.1	3.0	3.0	3.1	3.0	3.0	3.1	3.0	3.1	3.0	3.0	3.1
MAX	3.2	3.2	3.3	3.3	3.1	3.1	3.2	3.2	3.2	3.1	3.3	3.2	3.1	3.1	3.1	3.2	3.1	3.0	3.3	3.2
DEGR.	275	0	220	100	15	65	275	100	240	225	95	280	10	180	0	100	0	0	250	45

THE HIGHEST CONCENTRATION IS 3.30 PPM AT 220 DEGREES FROM REC3 .

1

JOB: Sunport I-25 Improvement Proj RUN: 2-6 PM Build Sunport SB-I25

RECEPTOR - LINK MATRIX FOR THE ANGLE PRODUCING
THE MAXIMUM CONCENTRATION FOR EACH RECEPTOR

* CO/LINK (PPM)

ANGLE (DEGREES)

LINK #	REC1	REC2	REC3	REC4	REC5	REC6	REC7	REC8	REC9	REC10	REC11	REC12	REC13	REC14	REC15	REC16	REC17	REC18	REC19	REC20
	275	0	220	100	15	65	275	100	240	225	95	280	10	180	0	100	0	0	250	45
1	0.1	0.0	0.0	0.0	0.0	0.0	0.0	0.0	0.0	0.0	0.0	0.1	0.0	0.0	0.0	0.0	0.0	0.0	0.1	0.1
2	0.0	0.1	0.0	0.1	0.0	0.1	0.1	0.1	0.0	0.0	0.1	0.0	0.0	0.0	0.1	0.1	0.0	0.0	0.0	0.0
3	0.0	0.0	0.1	0.1	0.0	0.0	0.0	0.1	0.0	0.0	0.1	0.0	0.0	0.0	0.0	0.1	0.0	0.0	0.0	0.0
4	0.1	0.0	0.1	0.1	0.0	0.0	0.1	0.0	0.1	0.1	0.1	0.1	0.0	0.0	0.0	0.0	0.0	0.0	0.2	0.1
5	0.0	0.0	0.0	0.0	0.0	0.0	0.0	0.0	0.0	0.0	0.0	0.0	0.0	0.0	0.0	0.0	0.0	0.0	0.0	0.0
6	0.0	0.0	0.0	0.0	0.0	0.0	0.0	0.0	0.0	0.0	0.0	0.0	0.0	0.0	0.0	0.0	0.0	0.0	0.0	0.0
7	0.0	0.0	0.0	0.0	0.1	0.0	0.0	0.0	0.0	0.0	0.0	0.0	0.1	0.1	0.0	0.0	0.0	0.0	0.0	0.0
8	0.0	0.1	0.1	0.0	0.0	0.0	0.0	0.0	0.1	0.0	0.0	0.0	0.0	0.0	0.0	0.0	0.1	0.0	0.0	0.0
9	0.0	0.0	0.0	0.0	0.0	0.0	0.0	0.0	0.0	0.0	0.0	0.0	0.0	0.0	0.0	0.0	0.0	0.0	0.0	0.0
10	0.0	0.0	0.0	0.0	0.0	0.0	0.0	0.0	0.0	0.0	0.0	0.0	0.0	0.0	0.0	0.0	0.0	0.0	0.0	0.0
11	0.0	0.0	0.0	0.0	0.0	0.0	0.0	0.0	0.0	0.0	0.0	0.0	0.0	0.0	0.0	0.0	0.0	0.0	0.0	0.0
12	0.0	0.0	0.0	0.0	0.0	0.0	0.0	0.0	0.0	0.0	0.0	0.0	0.0	0.0	0.0	0.0	0.0	0.0	0.0	0.0
13	0.0	0.0	0.0	0.0	0.0	0.0	0.0	0.0	0.0	0.0	0.0	0.0	0.0	0.0	0.0	0.0	0.0	0.0	0.0	0.0
14	0.0	0.0	0.0	0.0	0.0	0.0	0.0	0.0	0.0	0.0	0.0	0.0	0.0	0.0	0.0	0.0	0.0	0.0	0.0	0.0
15	0.0	0.0	0.0	0.0	0.0	0.0	0.0	0.0	0.0	0.0	0.0	0.0	0.0	0.0	0.0	0.0	0.0	0.0	0.0	0.0

RUN ENDED ON 05/12/15 AT 19:08

1 CAL3QHC (93157)
IBM-PC VERSION (2.01)

RUN NAME: 35.DAT 1313131313131313131313131313131313131313

RUN BEGIN ON 05/12/15 AT 19:08

CAL3QHC: LINE SOURCE DISPERSION MODEL - VERSION 2.0, JANUARY 1992

JOB: Sunport I-25 Improvement Proj RUN: 3-5 PM No Build Sunport Broadway

SITE & METEOROLOGICAL VARIABLES

VS = 0.0 CM/S VD = 0.0 CM/S Z0 = 175. CM
U = 1.0 M/S CLAS = 4 (D) ATIM = 60. MINUTES MIXH = 1000. M AMB = 3.0 PPM

LINK VARIABLES

LINK DESCRIPTION	LINK COORDINATES (FT) X1	Y1	X2	Y2	LENGTH (FT)	BRG (DEG)	TYPE	VPH	EF (G/MI)	H (FT)	W (FT)	V/C	QUEUE (VEH)
1. EB A	-1000.0	-8.0	0.0	-8.0	1000.	90.	AG	77.	1.0	0.0	32.0		
2. EB D	0.0	-14.0	1000.0	-14.0	1000.	90.	AG	2.	1.0	0.0	32.0		
3. WB A	1000.0	8.0	0.0	8.0	1000.	270.	AG	1.	1.0	0.0	32.0		
4. WB D	0.0	14.0	-1000.0	14.0	1000.	270.	AG	789.	1.0	0.0	32.0		
5. NB A	20.0	-1000.0	20.0	0.0	1000.	360.	AG	1185.	1.0	0.0	44.0		
6. NB D	20.0	0.0	20.0	1000.0	1000.	360.	AG	1449.	1.0	0.0	44.0		
7. NB L	2.0	-1000.0	2.0	0.0	1000.	360.	AG	121.	1.0	0.0	32.0		
8. SB A	-20.0	1000.0	-20.0	0.0	1000.	180.	AG	2572.	1.0	0.0	56.0		
9. SB D	-20.0	0.0	-20.0	-1000.0	1000.	180.	AG	1981.	1.0	0.0	44.0		
10. SB L	-2.0	1000.0	-2.0	0.0	1000.	180.	AG	2.	1.0	0.0	32.0		
11. EB T Q	-38.0	-8.0	-236.9	-8.0	199.	270.	AG	8.	100.0	0.0	12.0	0.85	10.1
12. WB T Q	38.0	8.0	38.5	8.0	1.	90.	AG	8.	100.0	0.0	12.0	0.00	0.0
13. NB L Q	2.0	-26.0	2.0	-729.3	703.	180.	AG	10.	100.0	0.0	12.0	1.86	35.7
14. NB T Q	20.0	-26.0	20.0	-174.9	149.	180.	AG	8.	100.0	0.0	24.0	0.52	7.6
15. SB L Q	-2.0	26.0	-2.0	27.3	1.	360.	AG	10.	100.0	0.0	12.0	0.03	0.1
16. SB T Q	-20.0	26.0	-20.0	265.5	239.	360.	AG	8.	100.0	0.0	24.0	0.84	12.2
17. SB R Q	-38.0	26.0	-38.0	194.0	168.	360.	AG	4.	100.0	0.0	12.0	0.59	8.5

1 PAGE 2

JOB: Sunport I-25 Improvement Proj RUN: 3-5 PM No Build Sunport Broadway

ADDITIONAL QUEUE LINK PARAMETERS

LINK DESCRIPTION	CYCLE LENGTH (SEC)	RED TIME (SEC)	CLEARANCE LOST TIME (SEC)	APPROACH VOL (VPH)	SATURATION FLOW RATE (VPH)	IDLE EM FAC (gm/hr)	SIGNAL TYPE	ARRIVAL RATE
11. EB T Q	130	96	4.5	340	1900	4.22	3	3
12. WB T Q	130	96	4.5	1	1900	4.22	3	3
13. NB L Q	130	119	4.5	121	1900	4.22	3	3
14. NB T Q	130	46	4.5	1185	1900	4.22	3	3
15. SB L Q	130	119	4.5	2	1900	4.22	3	3
16. SB T Q	130	46	4.5	1904	1900	4.22	3	3
17. SB R Q	130	46	4.5	668	1900	4.22	3	3

RECEPTOR LOCATIONS

RECEPTOR	COORDINATES (FT) X	Y	Z
1. 1	-48.0	-30.0	5.0
2. 2	48.0	-36.0	5.0
3. 3	48.0	30.0	5.0
4. 4	-60.0	36.0	5.0
5. 5	-48.0	-110.0	5.0
6. 6	48.0	-116.0	5.0
7. 7	128.0	-36.0	5.0
8. 8	128.0	30.0	5.0
9. 9	48.0	110.0	5.0
10. 10	-60.0	116.0	5.0
11. 11	-140.0	36.0	5.0
12. 12	-128.0	-30.0	5.0
13. 13	-48.0	-230.0	5.0
14. 14	48.0	-236.0	5.0
15. 15	248.0	-36.0	5.0
16. 16	248.0	30.0	5.0
17. 17	48.0	230.0	5.0
18. 18	-60.0	236.0	5.0
19. 19	-260.0	36.0	5.0
20. 20	-248.0	-30.0	5.0

1 PAGE 3

JOB: Sunport I-25 Improvement Proj RUN: 3-5 PM No Build Sunport Broadway

MODEL RESULTS

REMARKS : In search of the angle corresponding to the maximum concentration, only the first angle, of the angles with same maximum concentrations, is indicated as maximum.

WIND ANGLE RANGE: 0.-360.

WIND * CONCENTRATION

ANGLE (DEGR)	REC1	REC2	REC3	REC4	REC5	REC6	REC7	REC8	REC9	REC10	REC11	REC12	REC13	REC14	REC15	REC16	REC17	REC18	REC19	REC20
	(PPM)																			
0.	3.1	3.0	3.1	3.1	3.1	3.0	3.0	3.0	3.1	3.1	3.0	3.0	3.1	3.0	3.0	3.0	3.1	3.1	3.0	3.0
5.	3.1	3.0	3.0	3.1	3.1	3.0	3.0	3.0	3.0	3.1	3.0	3.0	3.1	3.0	3.0	3.0	3.0	3.1	3.0	3.0
10.	3.1	3.0	3.0	3.1	3.2	3.0	3.0	3.0	3.0	3.1	3.0	3.0	3.1	3.0	3.0	3.0	3.0	3.1	3.0	3.0
15.	3.1	3.0	3.0	3.1	3.2	3.0	3.0	3.0	3.0	3.1	3.0	3.0	3.1	3.0	3.0	3.0	3.0	3.1	3.0	3.0
20.	3.1	3.0	3.0	3.1	3.1	3.0	3.0	3.0	3.0	3.1	3.0	3.0	3.1	3.0	3.0	3.0	3.0	3.1	3.0	3.0
25.	3.1	3.0	3.0	3.1	3.1	3.0	3.0	3.0	3.0	3.1	3.0	3.0	3.1	3.0	3.0	3.0	3.0	3.1	3.0	3.0
30.	3.1	3.0	3.0	3.1	3.1	3.0	3.0	3.0	3.0	3.1	3.0	3.0	3.1	3.0	3.0	3.0	3.0	3.1	3.0	3.0
35.	3.1	3.0	3.0	3.1	3.1	3.0	3.0	3.0	3.0	3.1	3.0	3.0	3.1	3.0	3.0	3.0	3.0	3.1	3.0	3.0
40.	3.1	3.0	3.0	3.1	3.1	3.0	3.0	3.0	3.0	3.1	3.0	3.0	3.1	3.0	3.0	3.0	3.0	3.1	3.0	3.0
45.	3.0	3.0	3.0	3.1	3.1	3.0	3.0	3.0	3.0	3.1	3.0	3.0	3.1	3.0	3.0	3.0	3.0	3.1	3.0	3.0
50.	3.0	3.0	3.0	3.1	3.1	3.0	3.0	3.0	3.0	3.1	3.0	3.0	3.1	3.0	3.0	3.0	3.0	3.1	3.0	3.0
55.	3.1	3.0	3.0	3.1	3.1	3.0	3.0	3.0	3.0	3.1	3.0	3.0	3.1	3.0	3.0	3.0	3.0	3.1	3.0	3.0
60.	3.1	3.0	3.0	3.1	3.1	3.0	3.0	3.0	3.0	3.1	3.0	3.0	3.1	3.0	3.0	3.0	3.0	3.1	3.0	3.0
65.	3.1	3.0	3.0	3.1	3.1	3.0	3.0	3.0	3.0	3.1	3.0	3.0	3.1	3.0	3.0	3.0	3.0	3.1	3.0	3.0
70.	3.1	3.0	3.0	3.1	3.1	3.0	3.0	3.0	3.0	3.1	3.0	3.0	3.1	3.0	3.0	3.0	3.0	3.1	3.0	3.0
75.	3.1	3.0	3.0	3.1	3.1	3.0	3.0	3.0	3.0	3.1	3.0	3.0	3.1	3.0	3.0	3.0	3.0	3.1	3.0	3.0
80.	3.1	3.0	3.0	3.1	3.1	3.0	3.0	3.0	3.0	3.1	3.0	3.0	3.1	3.0	3.0	3.0	3.0	3.1	3.0	3.0
85.	3.1	3.0	3.0	3.1	3.1	3.0	3.0	3.0	3.0	3.1	3.0	3.0	3.1	3.0	3.0	3.0	3.0	3.1	3.0	3.0
90.	3.1	3.0	3.0	3.1	3.1	3.0	3.0	3.0	3.0	3.1	3.0	3.0	3.1	3.0	3.0	3.0	3.0	3.1	3.0	3.0
95.	3.1	3.0	3.0	3.1	3.1	3.0	3.0	3.0	3.0	3.1	3.0	3.0	3.1	3.0	3.0	3.0	3.0	3.1	3.0	3.0
100.	3.1	3.0	3.0	3.1	3.1	3.0	3.0	3.0	3.0	3.1	3.0	3.0	3.1	3.0	3.0	3.0	3.0	3.1	3.0	3.0
105.	3.1	3.0	3.0	3.1	3.1	3.0	3.0	3.0	3.0	3.1	3.0	3.0	3.1	3.0	3.0	3.0	3.0	3.1	3.0	3.0
110.	3.1	3.0	3.0	3.1	3.1	3.0	3.0	3.0	3.0	3.1	3.0	3.0	3.1	3.0	3.0	3.0	3.0	3.1	3.0	3.0
115.	3.1	3.0	3.0	3.1	3.1	3.0	3.0	3.0	3.0	3.1	3.0	3.0	3.1	3.0	3.0	3.0	3.0	3.1	3.0	3.0
120.	3.1	3.0	3.0	3.1	3.1	3.0	3.0	3.0	3.0	3.1	3.0	3.0	3.1	3.0	3.0	3.0	3.0	3.1	3.0	3.0
125.	3.1	3.0	3.0	3.1	3.1	3.0	3.0	3.0	3.0	3.1	3.0	3.0	3.1	3.0	3.0	3.0	3.0	3.1	3.0	3.0
130.	3.1	3.0	3.0	3.0	3.1	3.0	3.0	3.0	3.0	3.1	3.0	3.0	3.1	3.0	3.0	3.0	3.0	3.1	3.0	3.0
135.	3.1	3.0	3.0	3.0	3.1	3.0	3.0	3.0	3.0	3.1	3.0	3.0	3.1	3.0	3.0	3.0	3.0	3.1	3.0	3.0
140.	3.1	3.0	3.0	3.0	3.1	3.0	3.0	3.0	3.0	3.1	3.0	3.0	3.1	3.0	3.0	3.0	3.0	3.1	3.0	3.0
145.	3.1	3.0	3.0	3.0	3.1	3.0	3.0	3.0	3.0	3.1	3.0	3.0	3.1	3.0	3.0	3.0	3.0	3.1	3.0	3.0
150.	3.1	3.0	3.0	3.1	3.1	3.0	3.0	3.0	3.0	3.1	3.0	3.0	3.1	3.0	3.0	3.0	3.0	3.1	3.0	3.0
155.	3.1	3.0	3.0	3.1	3.1	3.0	3.0	3.0	3.0	3.1	3.0	3.0	3.1	3.0	3.0	3.0	3.0	3.1	3.0	3.0
160.	3.1	3.0	3.0	3.1	3.1	3.0	3.0	3.0	3.0	3.1	3.0	3.0	3.1	3.0	3.0	3.0	3.0	3.1	3.0	3.0
165.	3.1	3.0	3.0	3.1	3.1	3.0	3.0	3.0	3.0	3.1	3.0	3.0	3.1	3.0	3.0	3.0	3.0	3.1	3.0	3.0
170.	3.1	3.0	3.0	3.1	3.1	3.0	3.0	3.0	3.0	3.0	3.0	3.0	3.1	3.0	3.0	3.0	3.0	3.1	3.0	3.0
175.	3.1	3.0	3.0	3.1	3.1	3.0	3.0	3.0	3.0	3.0	3.0	3.0	3.1	3.0	3.0	3.0	3.0	3.1	3.0	3.0
180.	3.1	3.0	3.0	3.1	3.1	3.0	3.0	3.0	3.0	3.0	3.0	3.0	3.1	3.0	3.0	3.0	3.0	3.0	3.0	3.0
185.	3.1	3.1	3.0	3.0	3.1	3.1	3.0	3.0	3.0	3.0	3.0	3.0	3.1	3.1	3.0	3.0	3.0	3.0	3.0	3.0
190.	3.0	3.1	3.1	3.0	3.0	3.1	3.0	3.0	3.0	3.0	3.0	3.0	3.0	3.1	3.0	3.0	3.1	3.0	3.0	3.0
195.	3.0	3.1	3.0	3.0	3.0	3.1	3.0	3.0	3.0	3.0	3.0	3.0	3.0	3.1	3.0	3.0	3.1	3.0	3.0	3.0
200.	3.0	3.1	3.0	3.0	3.0	3.1	3.0	3.0	3.1	3.0	3.0	3.0	3.0	3.1	3.0	3.0	3.1	3.0	3.0	3.0
205.	3.0	3.1	3.0	3.0	3.0	3.1	3.0	3.0	3.1	3.0	3.0	3.0	3.0	3.1	3.0	3.0	3.2	3.0	3.0	3.0

1

JOB: Sunport I-25 Improvement Proj RUN: 3-5 PM No Build Sunport Broadway

WIND ANGLE (DEGR)	CONCENTRATION (PPM) REC1	REC2	REC3	REC4	REC5	REC6	REC7	REC8	REC9	REC10	REC11	REC12	REC13	REC14	REC15	REC16	REC17	REC18	REC19	REC20
210.	3.0	3.1	3.0	3.0	3.0	3.1	3.0	3.0	3.1	3.0	3.0	3.0	3.0	3.1	3.0	3.0	3.2	3.0	3.0	3.0
215.	3.0	3.0	3.0	3.0	3.0	3.0	3.0	3.0	3.1	3.0	3.0	3.0	3.0	3.0	3.0	3.0	3.2	3.0	3.0	3.0
220.	3.0	3.0	3.0	3.0	3.0	3.0	3.0	3.0	3.1	3.0	3.0	3.0	3.0	3.0	3.0	3.0	3.2	3.0	3.0	3.0
225.	3.0	3.0	3.0	3.0	3.0	3.0	3.0	3.0	3.1	3.0	3.0	3.0	3.0	3.0	3.0	3.0	3.2	3.0	3.0	3.0
230.	3.0	3.0	3.0	3.0	3.0	3.0	3.0	3.0	3.2	3.0	3.0	3.0	3.0	3.0	3.0	3.0	3.2	3.0	3.0	3.0
235.	3.0	3.0	3.0	3.0	3.0	3.0	3.0	3.0	3.1	3.0	3.0	3.0	3.0	3.0	3.0	3.0	3.1	3.0	3.0	3.0
240.	3.0	3.0	3.0	3.0	3.0	3.0	3.0	3.0	3.1	3.0	3.0	3.0	3.0	3.0	3.0	3.0	3.1	3.0	3.0	3.0
245.	3.0	3.0	3.0	3.0	3.0	3.0	3.0	3.0	3.1	3.0	3.0	3.0	3.0	3.0	3.0	3.0	3.1	3.0	3.0	3.0
250.	3.0	3.0	3.0	3.0	3.0	3.0	3.0	3.0	3.1	3.0	3.0	3.0	3.0	3.0	3.0	3.0	3.1	3.0	3.0	3.0
255.	3.0	3.0	3.0	3.0	3.0	3.0	3.0	3.0	3.1	3.0	3.0	3.0	3.0	3.0	3.0	3.0	3.1	3.0	3.0	3.0
260.	3.0	3.0	3.0	3.0	3.0	3.0	3.0	3.0	3.1	3.0	3.0	3.0	3.0	3.0	3.0	3.0	3.1	3.0	3.0	3.0
265.	3.0	3.0	3.0	3.0	3.0	3.0	3.0	3.0	3.1	3.0	3.0	3.0	3.0	3.0	3.0	3.0	3.1	3.0	3.0	3.0
270.	3.0	3.0	3.0	3.0	3.0	3.0	3.0	3.0	3.1	3.0	3.0	3.0	3.0	3.0	3.0	3.0	3.1	3.0	3.0	3.0
275.	3.0	3.0	3.1	3.0	3.0	3.0	3.0	3.0	3.1	3.0	3.0	3.0	3.0	3.0	3.0	3.0	3.1	3.0	3.0	3.0
280.	3.0	3.0	3.1	3.0	3.0	3.0	3.0	3.0	3.1	3.0	3.0	3.0	3.0	3.0	3.0	3.0	3.1	3.0	3.0	3.0
285.	3.0	3.0	3.1	3.0	3.0	3.0	3.0	3.0	3.1	3.0	3.0	3.0	3.0	3.0	3.0	3.0	3.1	3.0	3.0	3.0
290.	3.0	3.0	3.1	3.0	3.0	3.0	3.0	3.0	3.1	3.0	3.0	3.0	3.0	3.0	3.0	3.0	3.1	3.0	3.0	3.0
295.	3.0	3.0	3.1	3.0	3.0	3.0	3.0	3.0	3.1	3.0	3.0	3.0	3.0	3.0	3.0	3.0	3.1	3.0	3.0	3.0
300.	3.0	3.0	3.1	3.0	3.0	3.0	3.0	3.0	3.1	3.0	3.0	3.0	3.0	3.0	3.0	3.0	3.1	3.0	3.0	3.0
305.	3.0	3.0	3.1	3.0	3.0	3.0	3.0	3.0	3.1	3.0	3.0	3.0	3.0	3.0	3.0	3.0	3.1	3.0	3.0	3.0
310.	3.0	3.0	3.2	3.0	3.0	3.0	3.0	3.0	3.2	3.0	3.0	3.0	3.0	3.0	3.0	3.0	3.2	3.0	3.0	3.0
315.	3.0	3.0	3.2	3.0	3.0	3.0	3.0	3.0	3.2	3.0	3.0	3.0	3.0	3.0	3.0	3.0	3.2	3.0	3.0	3.0
320.	3.0	3.1	3.2	3.0	3.0	3.0	3.0	3.0	3.2	3.0	3.0	3.0	3.0	3.0	3.0	3.0	3.2	3.0	3.0	3.0
325.	3.0	3.1	3.2	3.0	3.0	3.0	3.0	3.0	3.2	3.0	3.0	3.0	3.0	3.0	3.0	3.0	3.2	3.0	3.0	3.0
330.	3.0	3.1	3.2	3.0	3.0	3.0	3.0	3.0	3.2	3.0	3.0	3.0	3.0	3.0	3.0	3.0	3.2	3.0	3.0	3.0
335.	3.0	3.1	3.2	3.0	3.0	3.0	3.0	3.0	3.2	3.0	3.0	3.0	3.0	3.1	3.0	3.0	3.2	3.0	3.0	3.0
340.	3.0	3.1	3.2	3.0	3.0	3.0	3.0	3.0	3.2	3.0	3.0	3.0	3.0	3.1	3.0	3.0	3.2	3.0	3.0	3.0
345.	3.0	3.2	3.2	3.0	3.0	3.1	3.0	3.0	3.2	3.0	3.0	3.0	3.0	3.1	3.0	3.0	3.2	3.0	3.0	3.0
350.	3.1	3.2	3.2	3.0	3.0	3.1	3.0	3.0	3.2	3.0	3.0	3.0	3.0	3.0	3.0	3.0	3.2	3.0	3.0	3.0
355.	3.1	3.2	3.2	3.1	3.1	3.0	3.0	3.0	3.1	3.1	3.0	3.0	3.0	3.0	3.0	3.0	3.1	3.0	3.0	3.0
360.	3.1	3.0	3.1	3.1	3.1	3.0	3.0	3.0	3.1	3.1	3.0	3.0	3.1	3.0	3.0	3.0	3.1	3.1	3.0	3.0
MAX	3.1	3.2	3.2	3.1	3.2	3.1	3.0	3.0	3.2	3.1	3.0	3.0	3.1	3.1	3.0	3.0	3.2	3.1	3.0	3.0
DEGR.	0	345	310	0	10	185	0	0	230	0	0	0	0	185	0	0	205	0	0	0

THE HIGHEST CONCENTRATION IS 3.20 PPM AT 345 DEGREES FROM REC2 .

1

JOB: Sunport I-25 Improvement Proj RUN: 3-5 PM No Build Sunport Broadway

RECEPTOR - LINK MATRIX FOR THE ANGLE PRODUCING
THE MAXIMUM CONCENTRATION FOR EACH RECEPTOR

CO/LINK (PPM)
ANGLE (DEGREES)

LINK #	REC1	REC2	REC3	REC4	REC5	REC6	REC7	REC8	REC9	REC10	REC11	REC12	REC13	REC14	REC15	REC16	REC17	REC18	REC19	REC20
	0	345	310	0	10	185	0	0	230	0	0	0	0	185	0	0	205	0	0	0
1	0.0	0.0	0.0	0.0	0.0	0.0	0.0	0.0	0.0	0.0	0.0	0.0	0.0	0.0	0.0	0.0	0.0	0.0	0.0	0.0
2	0.0	0.0	0.0	0.0	0.0	0.0	0.0	0.0	0.0	0.0	0.0	0.0	0.0	0.0	0.0	0.0	0.0	0.0	0.0	0.0
3	0.0	0.0	0.0	0.0	0.0	0.0	0.0	0.0	0.0	0.0	0.0	0.0	0.0	0.0	0.0	0.0	0.0	0.0	0.0	0.0
4	0.0	0.0	0.0	0.0	0.0	0.0	0.0	0.0	0.0	0.0	0.0	0.0	0.0	0.0	0.0	0.0	0.0	0.0	0.0	0.0
5	0.0	0.0	0.0	0.0	0.0	0.1	0.0	0.0	0.0	0.0	0.0	0.0	0.0	0.1	0.0	0.0	0.0	0.0	0.0	0.0
6	0.0	0.1	0.1	0.0	0.0	0.0	0.0	0.0	0.1	0.0	0.0	0.0	0.0	0.0	0.0	0.0	0.1	0.0	0.0	0.0
7	0.0	0.0	0.0	0.0	0.0	0.0	0.0	0.0	0.0	0.0	0.0	0.0	0.0	0.0	0.0	0.0	0.0	0.0	0.0	0.0
8	0.1	0.1	0.1	0.1	0.1	0.0	0.0	0.0	0.1	0.1	0.0	0.0	0.0	0.0	0.0	0.0	0.1	0.1	0.0	0.0
9	0.0	0.0	0.0	0.0	0.1	0.0	0.0	0.0	0.0	0.0	0.0	0.0	0.1	0.0	0.0	0.0	0.0	0.0	0.0	0.0
10	0.0	0.0	0.0	0.0	0.0	0.0	0.0	0.0	0.0	0.0	0.0	0.0	0.0	0.0	0.0	0.0	0.0	0.0	0.0	0.0
11	0.0	0.0	0.0	0.0	0.0	0.0	0.0	0.0	0.0	0.0	0.0	0.0	0.0	0.0	0.0	0.0	0.0	0.0	0.0	0.0
12	0.0	0.0	0.0	0.0	0.0	0.0	0.0	0.0	0.0	0.0	0.0	0.0	0.0	0.0	0.0	0.0	0.0	0.0	0.0	0.0
13	0.0	0.0	0.0	0.0	0.0	0.0	0.0	0.0	0.0	0.0	0.0	0.0	0.0	0.0	0.0	0.0	0.0	0.0	0.0	0.0
14	0.0	0.0	0.0	0.0	0.0	0.0	0.0	0.0	0.0	0.0	0.0	0.0	0.0	0.0	0.0	0.0	0.0	0.0	0.0	0.0
15	0.0	0.0	0.0	0.0	0.0	0.0	0.0	0.0	0.0	0.0	0.0	0.0	0.0	0.0	0.0	0.0	0.0	0.0	0.0	0.0
16	0.0	0.0	0.0	0.0	0.0	0.0	0.0	0.0	0.0	0.0	0.0	0.0	0.0	0.0	0.0	0.0	0.0	0.0	0.0	0.0
17	0.0	0.0	0.0	0.0	0.0	0.0	0.0	0.0	0.0	0.0	0.0	0.0	0.0	0.0	0.0	0.0	0.0	0.0	0.0	0.0

RUN ENDED ON 05/12/15 AT 19:08

1 CAL3QHC (93157)
IBM-PC VERSION (2.01)

RUN NAME: 36.DAT 1616161616161616161616161616161616161616

RUN BEGIN ON 05/12/15 AT 19:08

CAL3QHC: LINE SOURCE DISPERSION MODEL - VERSION 2.0, JANUARY 1992

JOB: Sunport I-25 Improvement Proj RUN: 3-6 PM Build Sunport Broadway

SITE & METEOROLOGICAL VARIABLES

VS = 0.0 CM/S VD = 0.0 CM/S Z0 = 175. CM
U = 1.0 M/S CLAS = 4 (D) ATIM = 60. MINUTES MIXH = 1000. M AMB = 3.0 PPM

LINK VARIABLES

LINK DESCRIPTION	LINK COORDINATES (FT) X1	Y1	X2	Y2	LENGTH (FT)	BRG (DEG)	TYPE	VPH	EF (G/MI)	H (FT)	W (FT)	V/C	QUEUE (VEH)
1. EB A	-1000.0	-20.0	0.0	-20.0	1000.	90.	AG	397.	1.0	0.0	56.0		
2. EB D	0.0	-26.0	1000.0	-26.0	1000.	90.	AG	804.	1.0	0.0	44.0		
3. EB L	-1000.0	-2.0	0.0	-2.0	1000.	90.	AG	218.	1.0	0.0	32.0		
4. WB A	1000.0	26.0	0.0	26.0	1000.	270.	AG	885.	1.0	0.0	56.0		
5. WB D	0.0	20.0	-1000.0	20.0	1000.	270.	AG	1504.	1.0	0.0	44.0		
6. WB L	1000.0	2.0	0.0	2.0	1000.	270.	AG	715.	1.0	0.0	44.0		
7. NB A	26.0	-1000.0	26.0	0.0	1000.	360.	AG	1101.	1.0	0.0	56.0		
8. NB D	26.0	0.0	26.0	1000.0	1000.	360.	AG	1500.	1.0	0.0	44.0		
9. NB L	2.0	-1000.0	2.0	0.0	1000.	360.	AG	541.	1.0	0.0	44.0		
10. SB A	-26.0	1000.0	-26.0	0.0	1000.	180.	AG	1756.	1.0	0.0	56.0		
11. SB D	-26.0	0.0	-26.0	-1000.0	1000.	180.	AG	2176.	1.0	0.0	44.0		
12. SB L	-2.0	1000.0	-2.0	0.0	1000.	180.	AG	371.	1.0	0.0	44.0		
13. EB L Q	-44.0	-2.0	-1375.5	-2.0	1331.	270.	AG	10.	100.0	0.0	12.0	2.10	67.6
14. EB T Q	-44.0	-20.0	-64.7	-20.0	21.	270.	AG	18.	100.0	0.0	24.0	0.17	1.1
15. EB R Q	-44.0	-38.0	-518.4	-38.0	474.	270.	AG	9.	100.0	0.0	12.0	1.09	24.1
16. WB L Q	44.0	2.0	766.1	2.0	722.	90.	AG	19.	100.0	0.0	24.0	1.24	36.7
17. WB T Q	44.0	26.0	413.4	26.0	369.	90.	AG	17.	100.0	0.0	24.0	1.03	18.8
18. WB R Q	44.0	44.0	221.6	44.0	178.	90.	AG	8.	100.0	0.0	12.0	0.91	9.0
19. NB L Q	2.0	-44.0	2.0	-1496.3	1452.	180.	AG	18.	100.0	0.0	24.0	1.51	73.8
20. NB T Q	26.0	-44.0	26.0	-100.0	56.	180.	AG	13.	100.0	0.0	24.0	0.26	2.8
21. NB R Q	44.0	-44.0	44.0	-202.6	159.	180.	AG	6.	100.0	0.0	12.0	0.73	8.1
22. SB L Q	-2.0	38.0	-2.0	162.5	125.	360.	AG	19.	100.0	0.0	24.0	0.93	6.3
23. SB T Q	-26.0	38.0	-26.0	244.3	206.	360.	AG	13.	100.0	0.0	24.0	0.86	10.5
24. SB R Q	-44.0	38.0	-44.0	210.7	173.	360.	AG	6.	100.0	0.0	12.0	0.78	8.8

1

JOB: Sunport I-25 Improvement Proj RUN: 3-6 PM Build Sunport Broadway

ADDITIONAL QUEUE LINK PARAMETERS

LINK DESCRIPTION	CYCLE LENGTH (SEC)	RED TIME (SEC)	CLEARANCE LOST TIME (SEC)	APPROACH VOL (VPH)	SATURATION FLOW RATE (VPH)	IDLE EM FAC (gm/hr)	SIGNAL TYPE	ARRIVAL RATE
13. EB L Q	100	88	4.5	218	1900	4.22	3	3
14. EB T Q	100	79	4.5	96	1900	4.22	3	3
15. EB R Q	100	79	4.5	301	1900	4.22	3	3
16. WB L Q	100	82	4.5	541	1900	4.22	3	3
17. WB T Q	100	74	4.5	764	1900	4.22	3	3
18. WB R Q	100	74	4.5	337	1900	4.22	3	3
19. NB L Q	100	81	4.5	715	1900	4.22	3	3
20. NB T Q	100	56	4.5	367	1900	4.22	3	3
21. NB R Q	100	56	4.5	518	1900	4.22	3	3
22. SB L Q	100	83	4.5	371	1900	4.22	3	3
23. SB T Q	100	58	4.5	1160	1900	4.22	3	3
24. SB R Q	100	53	4.5	596	1900	4.22	3	3

RECEPTOR LOCATIONS

RECEPTOR	COORDINATES (FT) X	Y	Z
1. 1	-54.0	-60.0	5.0
2. 2	66.0	-54.0	5.0
3. 3	54.0	66.0	5.0
4. 4	-66.0	48.0	5.0
5. 5	-54.0	-140.0	5.0
6. 6	66.0	-134.0	5.0
7. 7	146.0	-54.0	5.0
8. 8	134.0	66.0	5.0
9. 9	54.0	146.0	5.0
10. 10	-66.0	128.0	5.0
11. 11	-146.0	48.0	5.0
12. 12	-134.0	-60.0	5.0
13. 13	-54.0	-260.0	5.0
14. 14	66.0	-254.0	5.0
15. 15	266.0	-54.0	5.0
16. 16	254.0	66.0	5.0
17. 17	54.0	266.0	5.0
18. 18	-66.0	248.0	5.0
19. 19	-266.0	48.0	5.0
20. 20	-254.0	-60.0	5.0

1

JOB: Sunport I-25 Improvement Proj RUN: 3-6 PM Build Sunport Broadway

MODEL RESULTS

REMARKS : In search of the angle corresponding to the maximum concentration, only the first angle, of the angles with same maximum concentrations, is indicated as maximum.

WIND ANGLE RANGE: 0.-360.

WIND ANGLE (DEGR)	* CONCENTRATION (PPM) REC1	REC2	REC3	REC4	REC5	REC6	REC7	REC8	REC9	REC10	REC11	REC12	REC13	REC14	REC15	REC16	REC17	REC18	REC19	REC20
0.	3.1	3.0	3.1	3.1	3.0	3.0	3.0	3.0	3.1	3.0	3.0	3.0	3.1	3.0	3.0	3.0	3.1	3.0	3.0	3.0
5.	3.1	3.0	3.0	3.1	3.1	3.0	3.0	3.0	3.0	3.1	3.0	3.0	3.1	3.0	3.0	3.0	3.0	3.1	3.0	3.0
10.	3.1	3.0	3.0	3.1	3.1	3.0	3.0	3.0	3.0	3.1	3.0	3.0	3.1	3.0	3.0	3.0	3.0	3.1	3.0	3.0
15.	3.1	3.0	3.0	3.1	3.1	3.0	3.0	3.0	3.0	3.1	3.0	3.0	3.1	3.0	3.0	3.0	3.0	3.1	3.0	3.0
20.	3.1	3.0	3.0	3.1	3.1	3.0	3.0	3.0	3.0	3.1	3.0	3.0	3.1	3.0	3.0	3.0	3.0	3.1	3.0	3.0
25.	3.1	3.0	3.0	3.1	3.1	3.0	3.0	3.0	3.0	3.1	3.0	3.0	3.1	3.0	3.0	3.0	3.0	3.1	3.0	3.0
30.	3.1	3.0	3.0	3.1	3.1	3.0	3.0	3.0	3.0	3.1	3.0	3.0	3.1	3.0	3.0	3.0	3.0	3.1	3.0	3.0
35.	3.1	3.0	3.0	3.1	3.1	3.0	3.0	3.0	3.0	3.1	3.0	3.0	3.1	3.0	3.0	3.0	3.0	3.1	3.0	3.0
40.	3.1	3.0	3.0	3.1	3.1	3.0	3.0	3.0	3.0	3.1	3.0	3.0	3.1	3.0	3.0	3.0	3.0	3.1	3.0	3.0
45.	3.1	3.0	3.0	3.1	3.1	3.0	3.0	3.0	3.0	3.1	3.0	3.0	3.1	3.0	3.0	3.0	3.0	3.1	3.0	3.0
50.	3.1	3.0	3.0	3.1	3.1	3.0	3.0	3.0	3.0	3.1	3.0	3.0	3.1	3.0	3.0	3.0	3.0	3.1	3.0	3.0
55.	3.1	3.0	3.0	3.1	3.1	3.0	3.0	3.0	3.0	3.1	3.0	3.0	3.1	3.0	3.0	3.0	3.0	3.1	3.0	3.0
60.	3.1	3.0	3.0	3.1	3.1	3.0	3.0	3.0	3.0	3.1	3.0	3.0	3.1	3.0	3.0	3.0	3.0	3.1	3.0	3.0
65.	3.1	3.0	3.0	3.0	3.1	3.0	3.0	3.0	3.0	3.0	3.0	3.0	3.1	3.0	3.0	3.0	3.0	3.0	3.0	3.0
70.	3.1	3.0	3.0	3.0	3.1	3.0	3.0	3.0	3.0	3.0	3.0	3.0	3.1	3.0	3.0	3.0	3.0	3.0	3.0	3.0
75.	3.1	3.0	3.0	3.0	3.1	3.0	3.0	3.0	3.0	3.0	3.0	3.0	3.1	3.0	3.0	3.0	3.0	3.0	3.0	3.0
80.	3.1	3.0	3.0	3.0	3.1	3.0	3.0	3.0	3.0	3.0	3.0	3.0	3.1	3.0	3.0	3.0	3.0	3.0	3.0	3.0
85.	3.1	3.0	3.0	3.0	3.1	3.0	3.0	3.0	3.0	3.0	3.0	3.0	3.1	3.0	3.0	3.0	3.0	3.0	3.0	3.0
90.	3.1	3.0	3.0	3.1	3.1	3.0	3.0	3.0	3.0	3.1	3.0	3.0	3.1	3.0	3.0	3.0	3.0	3.1	3.0	3.0
95.	3.1	3.0	3.0	3.0	3.1	3.0	3.0	3.0	3.0	3.0	3.0	3.0	3.1	3.0	3.0	3.0	3.0	3.0	3.1	3.0
100.	3.1	3.0	3.0	3.0	3.1	3.0	3.0	3.0	3.0	3.0	3.1	3.0	3.1	3.0	3.0	3.0	3.0	3.0	3.1	3.0
105.	3.1	3.0	3.0	3.0	3.1	3.0	3.0	3.0	3.0	3.0	3.1	3.0	3.1	3.0	3.0	3.0	3.0	3.0	3.1	3.0
110.	3.1	3.0	3.0	3.0	3.1	3.0	3.0	3.0	3.0	3.0	3.1	3.0	3.1	3.0	3.0	3.0	3.0	3.0	3.1	3.0
115.	3.1	3.0	3.0	3.0	3.1	3.0	3.0	3.0	3.0	3.0	3.1	3.0	3.1	3.0	3.0	3.0	3.0	3.0	3.1	3.0
120.	3.1	3.0	3.0	3.0	3.1	3.0	3.0	3.0	3.0	3.1	3.1	3.0	3.1	3.0	3.0	3.0	3.0	3.1	3.1	3.0
125.	3.1	3.0	3.0	3.0	3.1	3.0	3.0	3.0	3.0	3.1	3.1	3.0	3.1	3.0	3.0	3.0	3.0	3.1	3.1	3.0
130.	3.1	3.0	3.0	3.1	3.1	3.0	3.0	3.0	3.0	3.1	3.1	3.0	3.1	3.0	3.0	3.0	3.0	3.1	3.1	3.0
135.	3.1	3.0	3.0	3.1	3.1	3.0	3.0	3.0	3.0	3.1	3.1	3.0	3.1	3.0	3.0	3.0	3.0	3.1	3.1	3.0
140.	3.1	3.0	3.0	3.1	3.1	3.0	3.0	3.0	3.0	3.1	3.1	3.0	3.1	3.0	3.0	3.0	3.0	3.1	3.1	3.0
145.	3.1	3.0	3.0	3.0	3.1	3.0	3.0	3.0	3.0	3.1	3.1	3.0	3.1	3.0	3.0	3.0	3.0	3.1	3.1	3.0
150.	3.1	3.0	3.0	3.0	3.1	3.0	3.0	3.0	3.0	3.1	3.0	3.0	3.1	3.0	3.0	3.0	3.0	3.1	3.0	3.0
155.	3.1	3.0	3.0	3.1	3.1	3.0	3.0	3.0	3.0	3.1	3.0	3.0	3.1	3.0	3.0	3.0	3.0	3.1	3.0	3.0
160.	3.1	3.0	3.0	3.1	3.1	3.0	3.0	3.0	3.0	3.0	3.0	3.0	3.1	3.0	3.0	3.0	3.0	3.1	3.0	3.0
165.	3.1	3.0	3.0	3.1	3.1	3.0	3.0	3.0	3.0	3.0	3.0	3.0	3.1	3.0	3.0	3.0	3.0	3.1	3.0	3.0
170.	3.1	3.0	3.0	3.1	3.1	3.0	3.0	3.0	3.0	3.0	3.0	3.0	3.1	3.0	3.0	3.0	3.0	3.1	3.0	3.0
175.	3.1	3.0	3.0	3.1	3.1	3.0	3.0	3.0	3.0	3.0	3.0	3.0	3.1	3.0	3.0	3.0	3.0	3.0	3.0	3.0
180.	3.1	3.0	3.0	3.1	3.1	3.0	3.0	3.0	3.0	3.0	3.0	3.0	3.1	3.0	3.0	3.0	3.0	3.0	3.0	3.0
185.	3.1	3.0	3.0	3.0	3.1	3.0	3.0	3.0	3.0	3.0	3.0	3.0	3.1	3.0	3.0	3.0	3.1	3.0	3.0	3.0
190.	3.0	3.0	3.0	3.0	3.0	3.0	3.0	3.0	3.1	3.0	3.0	3.0	3.0	3.0	3.0	3.0	3.1	3.0	3.0	3.0
195.	3.0	3.0	3.0	3.0	3.0	3.0	3.0	3.0	3.1	3.0	3.0	3.0	3.0	3.0	3.0	3.0	3.1	3.0	3.0	3.0
200.	3.0	3.0	3.0	3.0	3.0	3.0	3.0	3.0	3.1	3.0	3.0	3.0	3.0	3.0	3.0	3.0	3.1	3.0	3.0	3.0
205.	3.0	3.0	3.0	3.0	3.0	3.0	3.0	3.0	3.1	3.0	3.0	3.0	3.0	3.0	3.0	3.0	3.1	3.0	3.0	3.0

1

WIND ANGLE (DEGR)	* CONCENTRATION (PPM) REC1	REC2	REC3	REC4	REC5	REC6	REC7	REC8	REC9	REC10	REC11	REC12	REC13	REC14	REC15	REC16	REC17	REC18	REC19	REC20
210.	3.0	3.0	3.0	3.0	3.0	3.0	3.0	3.0	3.1	3.0	3.0	3.0	3.0	3.0	3.0	3.0	3.1	3.0	3.0	3.0
215.	3.0	3.0	3.0	3.1	3.0	3.0	3.0	3.0	3.1	3.0	3.1	3.0	3.0	3.0	3.0	3.0	3.1	3.0	3.1	3.0
220.	3.0	3.0	3.1	3.1	3.0	3.0	3.0	3.0	3.1	3.0	3.1	3.0	3.0	3.0	3.0	3.0	3.1	3.0	3.1	3.0
225.	3.0	3.0	3.1	3.1	3.0	3.0	3.0	3.0	3.1	3.0	3.1	3.0	3.0	3.0	3.0	3.0	3.1	3.0	3.1	3.0
230.	3.0	3.0	3.1	3.1	3.0	3.0	3.0	3.0	3.1	3.0	3.1	3.0	3.0	3.0	3.0	3.0	3.1	3.0	3.1	3.0
235.	3.0	3.0	3.0	3.1	3.0	3.0	3.0	3.0	3.1	3.0	3.1	3.0	3.0	3.0	3.0	3.0	3.1	3.0	3.1	3.0
240.	3.0	3.0	3.0	3.1	3.0	3.0	3.0	3.0	3.0	3.0	3.1	3.0	3.0	3.0	3.0	3.0	3.0	3.0	3.1	3.0
245.	3.0	3.0	3.0	3.1	3.0	3.0	3.0	3.0	3.0	3.0	3.1	3.0	3.0	3.0	3.0	3.0	3.0	3.0	3.1	3.0
250.	3.0	3.0	3.0	3.1	3.0	3.0	3.0	3.0	3.0	3.0	3.1	3.0	3.0	3.0	3.0	3.0	3.0	3.0	3.1	3.0
255.	3.0	3.0	3.0	3.1	3.0	3.0	3.0	3.0	3.0	3.0	3.1	3.0	3.0	3.0	3.0	3.0	3.0	3.0	3.1	3.0
260.	3.0	3.0	3.0	3.1	3.0	3.0	3.0	3.0	3.0	3.0	3.1	3.0	3.0	3.0	3.0	3.0	3.0	3.0	3.1	3.0
265.	3.0	3.0	3.0	3.1	3.0	3.0	3.0	3.0	3.0	3.0	3.1	3.0	3.0	3.0	3.0	3.0	3.0	3.0	3.1	3.0
270.	3.0	3.0	3.0	3.1	3.0	3.0	3.0	3.0	3.0	3.0	3.1	3.0	3.0	3.0	3.0	3.0	3.0	3.0	3.1	3.0
275.	3.0	3.0	3.0	3.0	3.0	3.0	3.0	3.0	3.0	3.0	3.0	3.0	3.0	3.0	3.0	3.0	3.0	3.0	3.0	3.0
280.	3.0	3.0	3.0	3.0	3.0	3.0	3.0	3.0	3.0	3.0	3.0	3.0	3.0	3.0	3.0	3.0	3.0	3.0	3.0	3.0
285.	3.0	3.0	3.0	3.0	3.0	3.0	3.0	3.0	3.0	3.0	3.0	3.0	3.0	3.0	3.0	3.0	3.0	3.0	3.0	3.0
290.	3.0	3.0	3.0	3.0	3.0	3.0	3.0	3.0	3.0	3.0	3.0	3.0	3.0	3.0	3.0	3.0	3.0	3.0	3.0	3.0
295.	3.0	3.0	3.0	3.0	3.0	3.0	3.0	3.0	3.0	3.0	3.0	3.0	3.0	3.0	3.0	3.0	3.0	3.0	3.0	3.0
300.	3.0	3.0	3.0	3.0	3.0	3.0	3.0	3.0	3.0	3.0	3.0	3.0	3.0	3.0	3.0	3.0	3.0	3.0	3.0	3.0
305.	3.0	3.0	3.1	3.0	3.0	3.0	3.0	3.0	3.1	3.0	3.0	3.0	3.0	3.0	3.0	3.0	3.1	3.0	3.0	3.0
310.	3.0	3.0	3.1	3.0	3.0	3.0	3.0	3.0	3.1	3.0	3.0	3.0	3.0	3.0	3.0	3.0	3.1	3.0	3.0	3.0
315.	3.0	3.0	3.1	3.0	3.0	3.0	3.0	3.0	3.1	3.0	3.0	3.0	3.0	3.0	3.0	3.0	3.1	3.0	3.0	3.0
320.	3.0	3.0	3.1	3.0	3.0	3.0	3.0	3.0	3.1	3.0	3.0	3.0	3.0	3.0	3.0	3.0	3.1	3.0	3.0	3.0
325.	3.0	3.0	3.1	3.0	3.0	3.0	3.0	3.0	3.1	3.0	3.0	3.0	3.0	3.0	3.0	3.0	3.1	3.0	3.0	3.0
330.	3.0	3.0	3.1	3.0	3.0	3.0	3.0	3.0	3.1	3.0	3.0	3.0	3.0	3.0	3.0	3.0	3.1	3.0	3.0	3.0
335.	3.0	3.0	3.1	3.0	3.0	3.0	3.0	3.0	3.1	3.0	3.0	3.0	3.0	3.0	3.0	3.0	3.1	3.0	3.0	3.0
340.	3.0	3.0	3.1	3.0	3.0	3.0	3.0	3.0	3.1	3.0	3.0	3.0	3.0	3.0	3.0	3.0	3.1	3.0	3.0	3.0
345.	3.0	3.0	3.1	3.0	3.0	3.0	3.0	3.0	3.1	3.0	3.0	3.0	3.0	3.0	3.0	3.0	3.1	3.0	3.0	3.0
350.	3.0	3.0	3.1	3.0	3.0	3.0	3.0	3.0	3.1	3.0	3.0	3.0	3.0	3.0	3.0	3.0	3.1	3.0	3.0	3.0
355.	3.0	3.0	3.1	3.0	3.0	3.0	3.0	3.0	3.1	3.0	3.0	3.0	3.0	3.0	3.0	3.0	3.1	3.0	3.0	3.0

360. *	3.1	3.0	3.1	3.1	3.0	3.0	3.0	3.0	3.1	3.0	3.0	3.0	3.1	3.0	3.0	3.0	3.1	3.0	3.0	3.0
MAX *	3.1	3.0	3.1	3.1	3.1	3.0	3.0	3.0	3.1	3.1	3.1	3.0	3.1	3.0	3.0	3.0	3.1	3.1	3.1	3.0
DEGR. *	0	0	0	0	5	0	0	0	0	5	100	0	0	0	0	0	0	5	95	0

THE HIGHEST CONCENTRATION IS 3.10 PPM AT 0 DEGREES FROM REC1 .

1

JOB: Sunport I-25 Improvement Proj RUN: 3-6 PM Build Sunport Broadway

RECEPTOR - LINK MATRIX FOR THE ANGLE PRODUCING
THE MAXIMUM CONCENTRATION FOR EACH RECEPTOR

CO/LINK (PPM)
ANGLE (DEGREES)

LINK #	REC1	REC2	REC3	REC4	REC5	REC6	REC7	REC8	REC9	REC10	REC11	REC12	REC13	REC14	REC15	REC16	REC17	REC18	REC19	REC20
	0	0	0	0	5	0	0	0	0	5	100	0	0	0	0	0	0	5	95	0
1	0.0	0.0	0.0	0.0	0.0	0.0	0.0	0.0	0.0	0.0	0.0	0.0	0.0	0.0	0.0	0.0	0.0	0.0	0.0	0.0
2	0.0	0.0	0.0	0.0	0.0	0.0	0.0	0.0	0.0	0.0	0.0	0.0	0.0	0.0	0.0	0.0	0.0	0.0	0.0	0.0
3	0.0	0.0	0.0	0.0	0.0	0.0	0.0	0.0	0.0	0.0	0.0	0.0	0.0	0.0	0.0	0.0	0.0	0.0	0.0	0.0
4	0.0	0.0	0.0	0.0	0.0	0.0	0.0	0.0	0.0	0.0	0.0	0.0	0.0	0.0	0.0	0.0	0.0	0.0	0.0	0.0
5	0.0	0.0	0.0	0.0	0.0	0.0	0.0	0.0	0.0	0.0	0.1	0.0	0.0	0.0	0.0	0.0	0.0	0.0	0.1	0.0
6	0.0	0.0	0.0	0.0	0.0	0.0	0.0	0.0	0.0	0.0	0.0	0.0	0.0	0.0	0.0	0.0	0.0	0.0	0.0	0.0
7	0.0	0.0	0.0	0.0	0.0	0.0	0.0	0.0	0.0	0.0	0.0	0.0	0.0	0.0	0.0	0.0	0.0	0.0	0.0	0.0
8	0.0	0.0	0.1	0.0	0.0	0.0	0.0	0.0	0.1	0.0	0.0	0.0	0.0	0.0	0.0	0.0	0.1	0.0	0.0	0.0
9	0.0	0.0	0.0	0.0	0.0	0.0	0.0	0.0	0.0	0.0	0.0	0.0	0.0	0.0	0.0	0.0	0.0	0.0	0.0	0.0
10	0.1	0.0	0.0	0.1	0.0	0.0	0.0	0.0	0.0	0.1	0.0	0.0	0.0	0.0	0.0	0.0	0.0	0.1	0.0	0.0
11	0.0	0.0	0.0	0.0	0.1	0.0	0.0	0.0	0.0	0.0	0.0	0.0	0.1	0.0	0.0	0.0	0.0	0.0	0.0	0.0
12	0.0	0.0	0.0	0.0	0.0	0.0	0.0	0.0	0.0	0.0	0.0	0.0	0.0	0.0	0.0	0.0	0.0	0.0	0.0	0.0
13	0.0	0.0	0.0	0.0	0.0	0.0	0.0	0.0	0.0	0.0	0.0	0.0	0.0	0.0	0.0	0.0	0.0	0.0	0.0	0.0
14	0.0	0.0	0.0	0.0	0.0	0.0	0.0	0.0	0.0	0.0	0.0	0.0	0.0	0.0	0.0	0.0	0.0	0.0	0.0	0.0
15	0.0	0.0	0.0	0.0	0.0	0.0	0.0	0.0	0.0	0.0	0.0	0.0	0.0	0.0	0.0	0.0	0.0	0.0	0.0	0.0
16	0.0	0.0	0.0	0.0	0.0	0.0	0.0	0.0	0.0	0.0	0.0	0.0	0.0	0.0	0.0	0.0	0.0	0.0	0.0	0.0
17	0.0	0.0	0.0	0.0	0.0	0.0	0.0	0.0	0.0	0.0	0.0	0.0	0.0	0.0	0.0	0.0	0.0	0.0	0.0	0.0
18	0.0	0.0	0.0	0.0	0.0	0.0	0.0	0.0	0.0	0.0	0.0	0.0	0.0	0.0	0.0	0.0	0.0	0.0	0.0	0.0
19	0.0	0.0	0.0	0.0	0.0	0.0	0.0	0.0	0.0	0.0	0.0	0.0	0.0	0.0	0.0	0.0	0.0	0.0	0.0	0.0
20	0.0	0.0	0.0	0.0	0.0	0.0	0.0	0.0	0.0	0.0	0.0	0.0	0.0	0.0	0.0	0.0	0.0	0.0	0.0	0.0
21	0.0	0.0	0.0	0.0	0.0	0.0	0.0	0.0	0.0	0.0	0.0	0.0	0.0	0.0	0.0	0.0	0.0	0.0	0.0	0.0
22	0.0	0.0	0.0	0.0	0.0	0.0	0.0	0.0	0.0	0.0	0.0	0.0	0.0	0.0	0.0	0.0	0.0	0.0	0.0	0.0
23	0.0	0.0	0.0	0.0	0.0	0.0	0.0	0.0	0.0	0.0	0.0	0.0	0.0	0.0	0.0	0.0	0.0	0.0	0.0	0.0
24	0.0	0.0	0.0	0.0	0.0	0.0	0.0	0.0	0.0	0.0	0.0	0.0	0.0	0.0	0.0	0.0	0.0	0.0	0.0	0.0

RUN ENDED ON 05/12/15 AT 19:08